Field-Attachable Connectors

BCC M474-0000-2D-000-51X475-000
Order Code: BCC03WZ

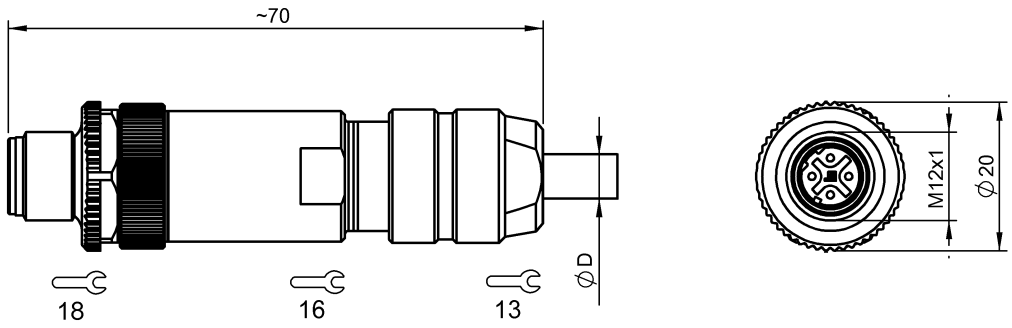

Basic features

Approval/Conformity	CE cURus EAC WEEE

Electrical connection

Cable diameter D	5...8 mm
Connection	M12x1-Male, Straight, 4-pin, D-coded
Contact shield	Iris spring
Number of connectable contacts	4
System	Can be fabricated

Electrical data

Operating voltage Ub	250 VDC / 250 VAC
Rated current (40 °C)	4.0 A

Environmental conditions

Ambient temperature	-40...85 °C
IP rating	IP67

Material

Material contact carrier	PA
Material contacts	Brass
Material cover nut	Die-cast zinc
Material grip	Die-cast zinc

Mechanical data

Connection cross-section	0.14...0.75 mm²
Tightening torque pigtail	0.6 Nm
Type of wire mounting	Screw terminals

Remarks

Enclosure rating per IEC 60529, only in screwed state with the associated mating piece.

BCC M474-0000-2D-000-51X475-000
Order Code: BCC03WZ

Connector Drawings

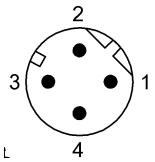

PIN 1-4 usable