Technical Data
Plastic bodied limit switch

BERNSTEIN safe solutions

Series I88

Description **I88-U1Z HW RO11** Article number **6086121021**

Operating symbol

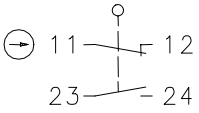

Fixed positioning for safety applications

Mounting screw according to DIN 912 M5

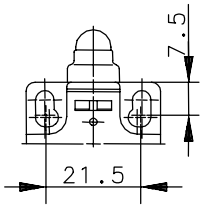

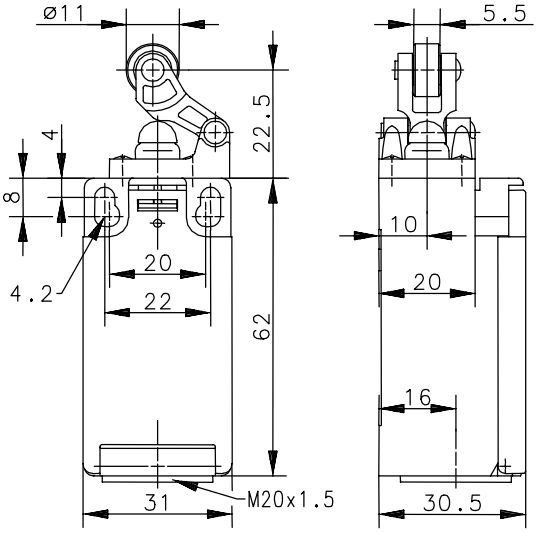

Operating diagram

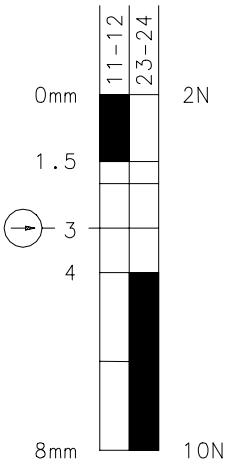

On Off

Tolerance:
Operating point ± 0,25mm;
Actuating force ± 10%

Electrical data		
Rated insulation voltage	U_i	250V AC
Conv. thermal current	I_{the}	10A
Rated operational voltage	U_e	240V
Utilization category		AC-15, U_e / I_e 240V/3A
Direct opening action	⊖	acc. to IEC/EN 60947-5-1, Annex K
Short-circuit protective device		Fuse 10A gL/gG
Protection class		II, totally insulated

This document will not become the contractual basis; the details included herein do not constitute any descriptions of expected conditions, so that warranties/claims for defects on account of possible variations of the actual qualities from the qualities described herein are explicitly excluded. All rights reserved. Specifications subject to change without notice!

Bernstein AG, Tieloser Weg 6, D-32457 Porta Westfalica / www.bernstein-ag.de

Technical Data
Plastic bodied limit switch

Mechanical data	
Enclosure	Thermoplastic, glass fibre reinforced (UL 94-V0)
Cover	Thermoplastic, glass fibre reinforced (UL 94-V0)
Actuator	Lever with roller (thermoplastic)
Ambient air temperature	-30°C … +80°C
Contact type	1 NC, 1 NO (Zb)
Mechanical life	10 x 10^6 switching cycles
Switching frequency	≤ 100/min
Assembly	2 x M4
Connection	4 screw connections (M3,5)
Conductor cross-sections	Solid: 0.5 ... 1.5mm²
	Litz wire with ferrules: 0.5 ... 1.5mm²
Cable entrance	1 x M20x1,5
Weight	≈ 0,07kg
Installation position	Operator definable
Protection type	IP65 acc. to EN 60529; DIN VDE 0470 T1

Actuation

The actuating device is preferably started from 2 sides.
By loosening the 4 screws the actuation assembly can be rotated in 90 degree increments such that 4 actuation directions are possible.
The actuation assembly is to be again fastened to the housing using the 4 screws.

Standards	VDE 0660 T100, DIN EN 60947-1, IEC 60947-1
	VDE 0660 T200, DIN EN 60947-5-1, IEC 60947-5-1
EU Conformity	CE
Approvals	cCSAus A300 (same polarity)

Notes

The degree of protection (IP code) specified applies solely to a property closed cover and the use of an equivalent cable gland with adequate cable.

This document will not become the contractual basis; the details included herein do not constitute any descriptions of expected conditions, so that warranties/claims for defects on account of possible variations of the actual qualities from the qualities described herein are explicitly excluded. All rights reserved. Specifications subject to change without notice!

Bernstein AG, Tieloser Weg 6, D-32457 Porta Westfalica / www.bernstein-ag.de