Max. 82 m³/h

DC axial fans

☐ 60 x 32 mm



- **Material:** Housing: GRP[1] (PBT)
  Impeller: GRP[1] (PA)
- **Direction of air flow:** Exhaust over struts
- **Direction of rotation:** Clockwise, looking towards rotor
- **Connection:** Via single wires AWG 24, TR 64
- **Weight:** 100 g

- **Possible special versions:**
  (See chapter DC fans - specials)
  - Speed signal
  - Go / NoGo alarm
  - Alarm with speed limit
  - External temperature sensor
  - PWM control input
  - Analog control input
  - Moisture protection

1) Fiberglass-reinforced plastic

Series 600 J VWC0060JUECS **Nominal data**	Air flow	Air flow	**Nominal voltage**	Voltage range	Sound pressure level	Sound power level	Sintec sleeve bearings Ball bearings	Power consumption	Nominal speed	Temperature range	Service life L_{10} (40 °C) ebm-papst standard Service life L_{10} (T_{max}) ebm-papst standard	Life expectancy L_{10IPC} (40 °C) see page 15	Curve
Type	**m³/h**	**cfm**	**VDC**	**VDC**	**dB(A)**	**Bel(A)**	**□ / ■**	**Watts**	**rpm⁻¹**	**°C**	**Hours**	**Hours**	
612 JH	70	41.2	**12**	7...13.6	53	6.4	■	7.7	11 700	-20...+70	57 500 / 27 500	97 500	①
614 JH	70	41.2	**24**	14...26.4	53	6.4	■	7.7	11 700	-20...+70	57 500 / 27 500	97 500	①
618 JH	70	41.2	**48**	36...56	53	6.4	■	7.7	11 700	-20...+70	57 500 / 27 500	97 500	①
Fan types with streamer and integrated guard grille.													
614 J/2 HHP	82	48.3	**24**	18...30	62	7.6	■	14.6	15 000	-20...+75	65 000 / 25 000	110 000	②
618 J/2 HHP	82	48.3	**48**	38...58	62	7.6	■	14.6	15 000	-20...+75	65 000 / 25 000	110 000	②

Subject to change

Rear view of types 614 J/2 HHP and 618 J/2 HHP

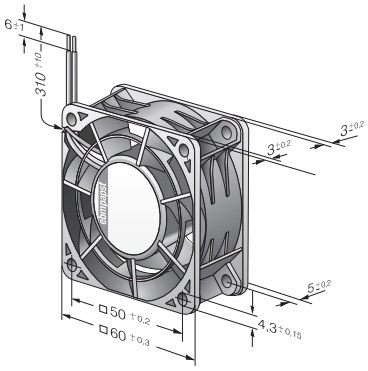

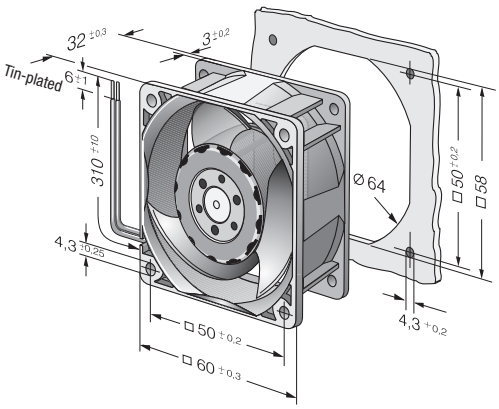

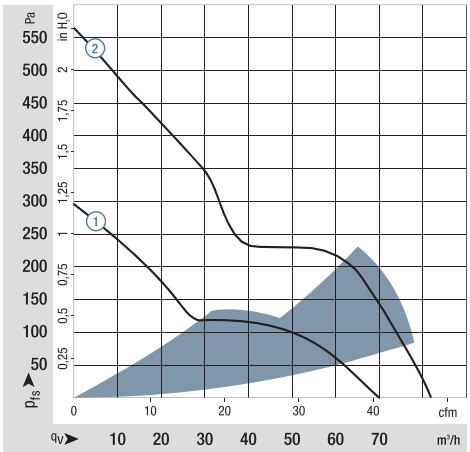

Air performance measured according to: ISO 5801.
Installation category A, without contact protection.
Noise: Total sound power level L_{WA} ISO 10302 measured on a hemisphere with a radius of 2 m.
Sound pressure level L_{pA} measured at 1 m distance from fan axis.
The values given are applicable only under the specified measuring conditions and may differ depending on the installation conditions.
In the event of deviation from the standard configuration, the parameters must be checked after installation!
For detailed information see
http://www.ebmpapst.com/general conditions