Up to PL e of EN ISO 13849-1
PNOZ s30



Speed monitor for safe monitoring of standstill, speed, position, speed range and direction of rotation.

Approvals

	PNOZ s30
TÜV SÜDDEUTSCHLAND	Pending
cULus	Pending

Unit features

- Measured value recorded by
  - Incremental encoder
  - Proximity switch
- Measured variables
  - Standstill
  - Rotational speed
  - Position
  - Speed range
  - Direction of rotation
- Positive-guided relay outputs
  - 2 safety contacts
  - 2 auxiliary contacts
- Semiconductor outputs
  - 4 auxiliary outputs
- Expansion interface for 2 more safe relay outputs
- Can be configured via the display on the speed monitor
- Configuration is stored on a chip card
- Display
  - Current frequency
  - Current position
  - Warning and error messages
- Status and fault LEDs
- Incremental encoder connection technology:
  RJ-45 female connector
- See order reference for unit types

Unit description

The speed monitor monitors standstill, speed, speed range, position and direction of rotation in accordance with EN ISO 13849-1 up to PL e and EN IEC 62061 up to SIL CL 3.

Safety features

The relay conforms to the following safety criteria:

- The circuit is redundant with built-in self-monitoring.
- The safety function remains effective in the case of a component failure.

Block diagram

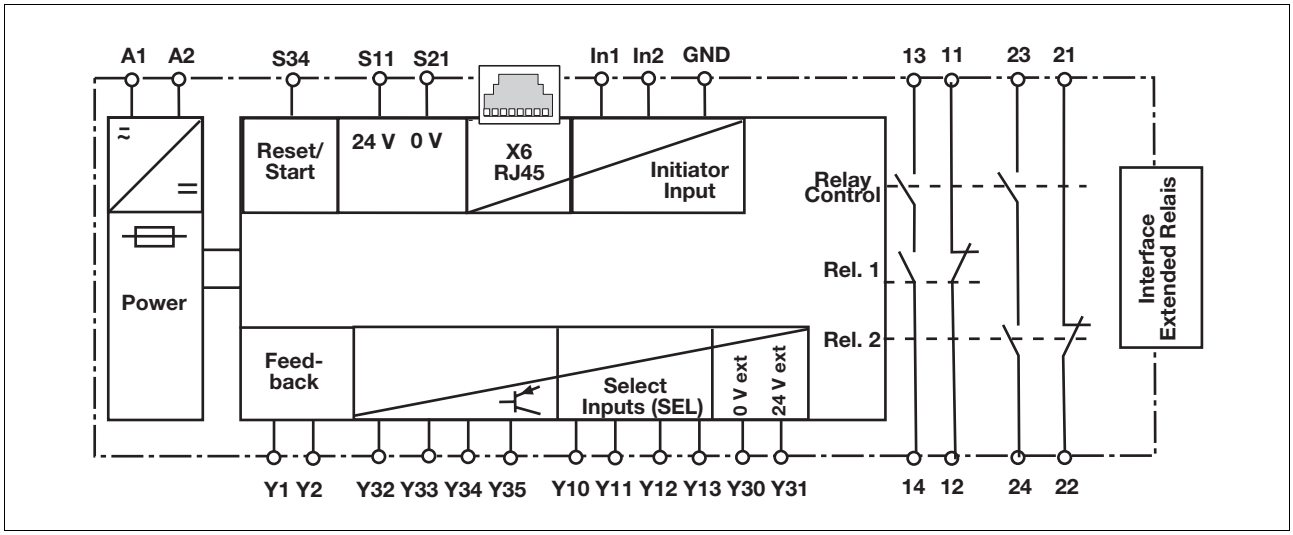

Up to PL e of EN ISO 13849-1
PNOZ s30

Function description

Encoders record the measured values. The monitoring functions are selected via the select inputs and applied to the measured values.
The monitoring functions are configured menu-driven using a rotary switch. The outputs switch depending on the configuration.
In order to extend the number of outputs an interface is available to which a PNOZsigma expander module can be connected.

Monitoring functions

The speed monitor monitors for:
- **Standstill**
  With standstill monitoring, the output is switched on when the value falls below the stated standstill value; if the standstill value is exceeded, the output switches off.
- **Rotational speed**
  With overspeed monitoring, the output switches off when the stated value is exceeded.
- **Position**
  Position monitoring is activated through a monitored reset via the reset input. The current position is adopted and the output is switched on.
  The output will now stay switched on provided the position is within the configured range (position window) around position x.
- **Speed range**
  With range monitoring, the output switches off if the frequency is outside the configured range.
- **Direction of rotation**
  If the direction of rotation is to be safely detected, this function must be linked to a safety contact.
  – If "Clockwise" is configured, the safety output is switched on during normal operation in clockwise rotation.
  – If "Anti-clockwise" is configured, the safety output is switched on during normal operation in anticlockwise rotation.

  A tolerance can be entered for both directions of rotation. Within this tolerance, the drive can run in the wrong direction without the assigned output switching off.
  Please note: No direction of rotation can be detected if proximity switches are used.

Incremental encoders or proximity switches can be used to record the values (see "Encoder types" chapter).

Reset modes
You can choose between the following reset modes:
- **Automatic reset**
  If an automatic reset is configured, the output switches on automatically if the speed does not reach the limit value, for example.
- **Monitored reset with rising edge**
  If a monitored reset with rising edge is configured, the output switches on if the speed does not reach the limit value and a rising edge was detected at S34.
- **Monitored reset with falling edge**
  If a monitored reset with falling edge is configured, the output switches on if the speed does not reach the limit value and then a falling edge was detected at S34.

Switch delay
A delay time of 0 ... 30 s can be set for each output. The outputs will not switch until the set time has elapsed. It is possible to configure whether the delay time is to be activated when switching on, switching off, or switching on and off.

Feedback loop
The feedback loop is used to monitor external contactors or relays. If an output is activated, it will not switch on until the feedback loop is closed.

Hysteresis
A hysteresis of 0 ... 50 % can be entered for each function. This prevents the outputs on the speed monitor from bouncing if there are fluctuations around the response value. The hysteresis becomes effective when the output is switched on:
Switch-on value = switching threshold – hysteresis
For the lower range limit:
Switch-on value = switching threshold – hysteresis

Start-up suppression time
To avoid spurious output signals, during the machine's start-up phase the evaluation of the encoder signals can be delayed after the start (0 ... 30 s).

Switching direction on semiconductor outputs
The semiconductor outputs can be operated in normally de-energised or normally energised mode.

Units
The configured values can be entered in various units. Various units can be selected for speed and distance, depending on the axis type (linear or rotational axis).

Broken shearpin monitoring
To monitor for broken shearpins, an incremental encoder is connected to track A and B and a proximity switch to track Z.

Speed configuration

The speed monitor is configured using the rotary knob at the device.
Up to 9 switch functions F1 ... F9 that are monitored simultaneously can be configured in a parameter set.
A switch function is comprised of:
- Configured speed/standstill
- Switching threshold
- Hysteresis

The standstill value is applied for configured switch functions for which no value is entered.
The outputs are assigned to the switch functions.
A switch delay and the reset behaviour can be configured for each output.
For monitoring various operating modes, for example, up to 16 parameter sets (P0 ... P15) can be configured with max. 9 switch functions each.
The parameter set for which the switch functions are to be monitored is then selected via the 4 select inputs SEL1, SEL2, SEL4, SEL8.
If only one parameter set is used, you should configure the parameter set P0. Then it is not necessary to connect a select input.

Up to PL e of EN ISO 13849-1
PNOZ s30

Example:
2 parameter sets for 2 operating modes are configured:
- Set-up: P1
- Automatic mode: P2

The parameter set P2, "Automatic mode", is selected for speed monitoring (selection via the select inputs, see next chapter "Select inputs").
The following switch functions are selected for the parameter set P2:
- F1: Standstill 2 Hz
- F2: Overspeed: 3000 Hz
- F3: Warning threshold: 2800 Hz

The following outputs are assigned to the switch functions:
- F1: Relay output Rel. 1
- F2: Relay output Rel. 2
- F3: Semiconductor output Out 1

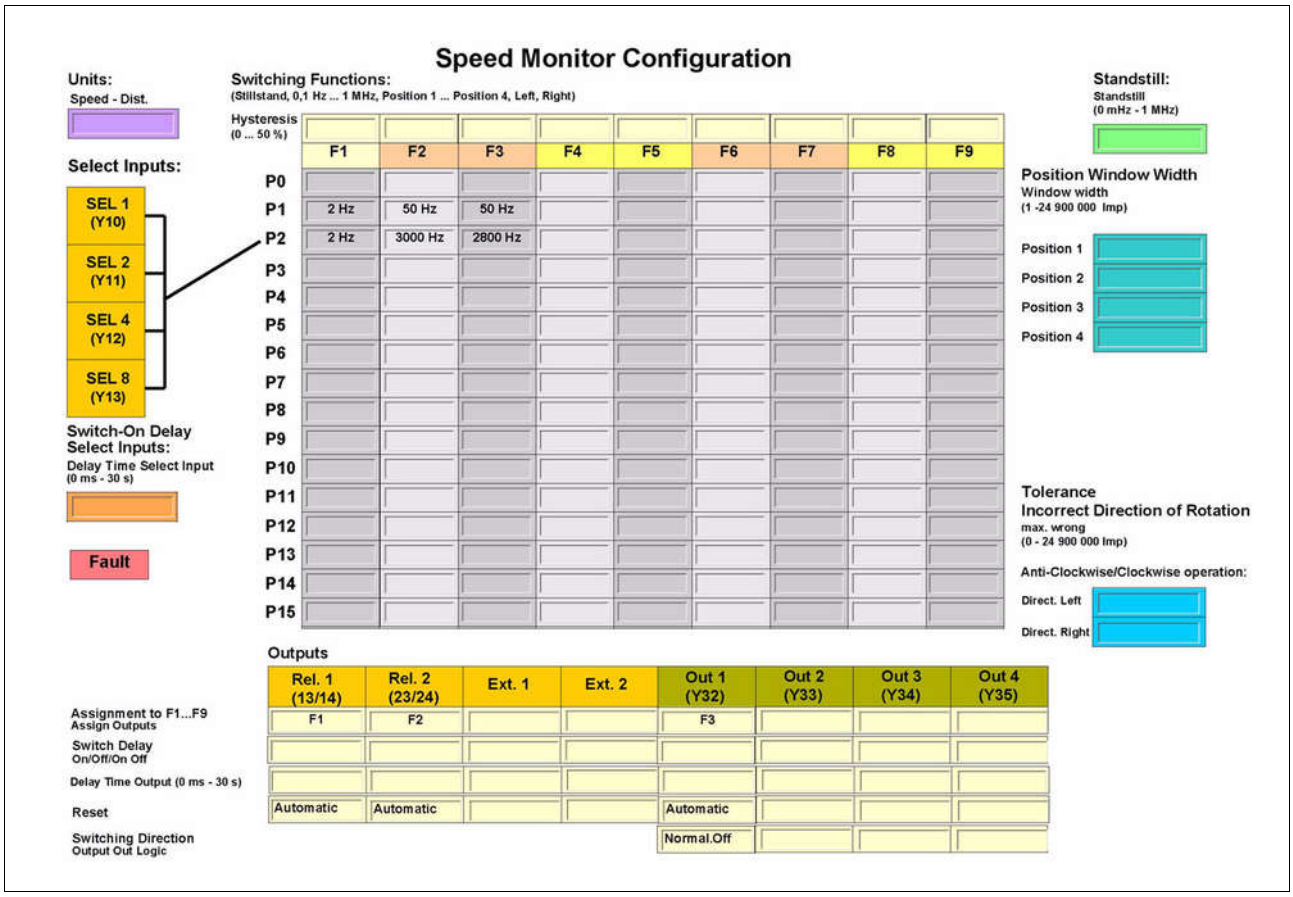

For a better overview of the device settings, we recommend that you fill in the configuration overview before setting the device parameters (link to form, see "Create configuration overview" chapter).

Up to PL e of EN ISO 13849-1
PNOZ s30

Select inputs

The parameter sets are selected via the 4 select inputs SEL1, SEL2, SEL4, SEL8. Only one of the configured parameter sets can be selected.

For applications up to PL e of EN ISO 1349-1 and up to SIL CL 3 of EN IEC 62061 max. 4 parameter sets can be configured: P1, P2, P4 and P8 (or P0 if only 1 parameter set is used).

Parameter set	Signal statuses of the select inputs			
	SEL 8	SEL 4	SEL 2	SEL 1
P1	0	0	0	1
P2	0	0	1	0
P4	0	1	0	0
P8	1	0	0	0

The default value "Standstill" must not be changed for all other parameter sets.
When using these 4 select inputs, the following safety features are met:

- The 1 from n principle ensures that none of the parameter sets P1, P2, P4 or P8 are selected due to errors in the actuation. In the event of an error, monitoring for standstill always occurs.
- Short circuits will be detected
- P0 is selected in the event of an open circuit.

If necessary, the number of parameter sets can be increased to max. 16. These can only be used for applications up to max. PL d of EN ISO 13849-1 and up to SIL CL 2 of EN IEC 62061.

Parameter set	Signal statuses of the select inputs			
	SEL 8	SEL 4	SEL 2	SEL 1
P0	0	0	0	0
P1	0	0	0	1
P2	0	0	1	0
P3	0	0	1	1
P4	0	1	0	0
P5	0	1	0	1
P6	0	1	1	0
P7	0	1	1	1
P8	1	0	0	0
P9	1	0	0	1
P10	1	0	1	0
P11	1	0	1	1
P12	1	1	0	0
P13	1	1	0	1
P14	1	1	1	0
P15	1	1	1	1

Up to PL e of EN ISO 13849-1
PNOZ s30

When using the expanded parameter sets, please note:
If an open circuit occurs when activating the select inputs, the next lowest value is activated.
The limit values for the switch functions must therefore always be entered in ascending order. (Parameter set 1 -> lowest values, parameter set 15 -> highest values).

Switch-on delay of the select inputs
A reaction time of between 0 and 30 s can be entered for the select inputs. That way it is possible to avoid invalid signals (e.g. contact bounce) that occur when switching.

Safety guidelines for configuration

During the configuration for safety-related applications, please note:
- The maximum frequency of the encoders used must be entered for a complete configuration ("Input Device type"-> "Track AB" -> "Track AB fmax" or "Track Z" -> "Track Z fmax" menu.)
- The standstill frequency must be the smallest frequency entered in the configuration.
- For parameter sets that aren't used, the standstill values are automatically transferred. These must not be changed.
- The limit values must always be entered in ascending order. (Parameter set 1 -> lowest values, parameter set 15 -> highest values).
- During position monitoring, please note:
  - Monitored reset must be configured for the position monitoring.
  - A position monitoring function must not be assigned to two outputs that are activated with different reset behaviour (one output rising edge, one output falling edge).
- The configurable output switch-off delay (t_{do}, Off) when overspeed is reached will increase the speed monitor's reaction time by the stated value (see technical details). This must not delay the arrival of a safe condition by more than the permitted time. The configuration of the switch-off delay must be considered in the risk assessment as regards hazards, reaction time and safety distance.

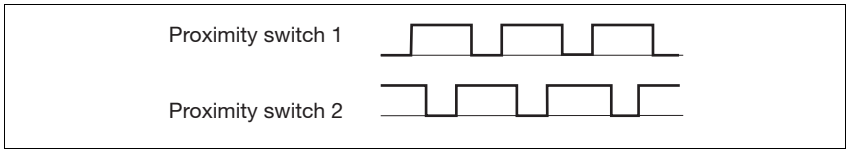

CAUTION!
Appropriate installation measures should be taken to prevent a foreign body coming between the signal encoder and the proximity switch. If not, the foreign body could cause invalid signals.
- Please note the values stated in the technical details

Chip card

The set parameters, the name of the configuration and the passwords are stored on the chip card (see "Using the chip card" chapter).

Integrated protection mechanisms

The relay conforms to the following safety criteria:
- The circuit is redundant with built-in self-monitoring.
- The safety function remains effective in the case of a component failure.

Proximity switch

- The following proximity switches can be used:
  - pnp
  - npn
- The proximity switches must be fitted so that at least one is always activated.
- The proximity switches must be fitted so that the recorded signals overlap.
- The supply voltage of the proximity switches should be monitored via the track S.

Up to PL e of EN ISO 13849-1
PNOZ s30

Incremental encoders

- The following encoders can be used:
  - TTL, HTL (single-ended or differential signals)
  - sin/cos 1 Vss
  - Hiperface
- The encoders can be connected with or without Z index
- A proximity switch can also be connected to track Z for monitoring broken shearpins
- An output can be connected at the encoder via track S (e.g. for fault monitoring).

Please note the values stated in the technical details

Adapter for incremental encoders

The adapter records the data between the incremental encoder and the drive and makes it available to the speed monitor via the RJ-45 female connector.
Pilz supplies complete adapters as well as ready-made cable with RJ-45 female connectors, which can be used when making an individual adapter. The range of products in this area is constantly being expanded. Please contact us about the range of adapters that is currently available.

Categories

The following table contains details on the maximum safety-related characteristic data that can be achieved with the PNOZ s30 depending on the encoder type, the wiring and the operating mode.

Input device	Operating mode PNOZ s30	Max. achievable values	
		EN ISO 13849-1 PL	**EN IEC 62061 SIL CL**
Standard encoder	Monitoring 1 encoder	PL c (Cat. 1)	-
Safe encoder *1)		PL d (Cat. 2)	SIL CL 2
Standard encoder + proximity switch feasibility (Z frequency)	Monitoring 2 encoders	PL e (Cat. 3)	SIL CL 3
2 proximity switches *2)			
Safe encoders with Z index *1)			

*1) Safe encoders are encoders that are certified in accordance with EN 61508, EN 13849 and EN 62061. Certain external errors must be detected in order to implement the safety function. The encoder and evaluation device must be compatible.
*2) The stated max. safety-related characteristic data can only be achieved if

- Diverse technologies / manufacturers are used
- the encoder supply is evaluated via track S.

Please note:

- The wiring must be performed in accordance with the details in the "Commissioning" chapter.
- A forced dynamisation must be performed.
  The monitored encoder must be moved so that the signal changes on all the connected tracks within an 8 hour period.

Open circuits of every individual track (A, A\, B, B\, Z, Z\ or S) are recognised and lead to safe condition of the outputs.
For applications in accordance with PL e and SIL CL 3, the "Overspeed" output must be integrated into the safety function in every operating mode and evaluated so that a shutdown occurs if the output switches to a safe condition.

Up to PL e of EN ISO 13849-1
PNOZ s30

Example for safety-related applications

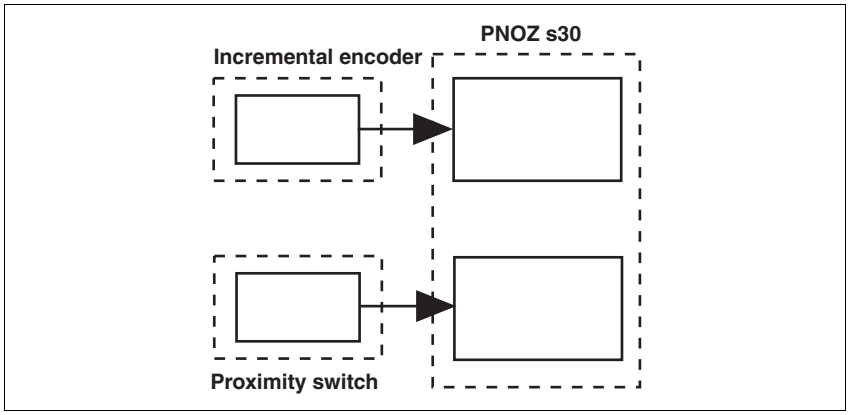

Safety-related characteristic data:

Input device	PNOZ s30
MTTFD = MTTF	Values for 2 encoder evaluation see Safety-related characteristic data in "Technical details" chapter
DC = 90 %	

Assumptions for the encoder system:

- Encoder is swapped after the first fault (non-repairable system)
- 100 % of the faults that occur are hazardous (worst case)

Wiring

Note:

- Information given in the "Technical details" must be followed.
- Use copper wire that can withstand 75 °C.

Pin assignment of the RJ45 female connector

RJ45 female connector 8-pole	PIN	Track
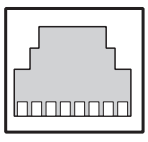	1	S
	2	GND
	3	Z
	4	A
	5	A/
	6	Z/
	7	B
	8	B/

Up to PL e of EN ISO 13849-1
PNOZ s30

Supply voltage

Supply voltage	AC	DC
	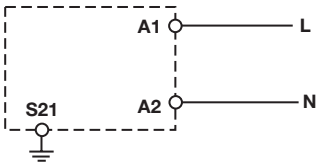	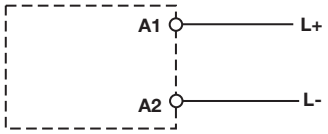

Connection of proximity switches

The following proximity switches can be connected:
- A: pnp, B: pnp
- A: npn, B: npn
- A: pnp, B: npn
- A: npn, B: pnp

When connecting proximity switches please note:
- The terminals In1, In2 and GND are linked internally with the tracks A, B and GND of the RJ-45 female connector (see drawing).
- Track S should be used to monitor the supply voltage (see drawing). A permitted voltage range can be entered in the menu.
- Connect the proximity switch to 24 VDC of the power supply.

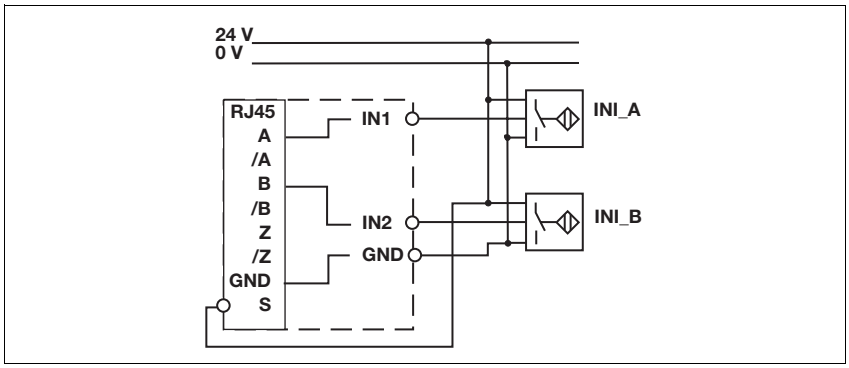

Connection of the incremental encoder

Proceed as follows when connecting the incremental encoder:
- The incremental encoder can be connected via an adapter (e.g. PNOZ msi6p) or can be connected directly to the speed monitor.
- Use only shielded cables for all connections
- Always connect GND from the incremental encoder to GND from the RJ-45 female connector.

Connect incremental encoder to speed monitor

Encoder types:
- TTL single ended
- HTL single ended

Please note:
- Tracks /A and /B must remain free

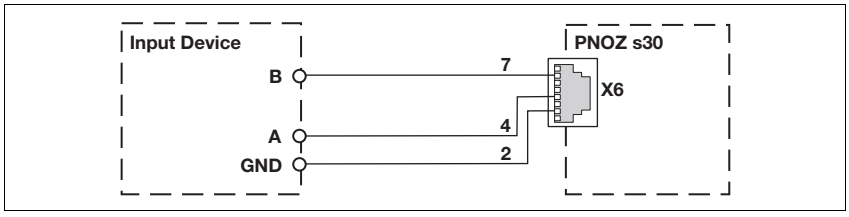

Up to PL e of EN ISO 13849-1
PNOZ s30

Encoder types:
- TTL differential
- HTL differential
- sin/cos 1 Vss
- Hiperface

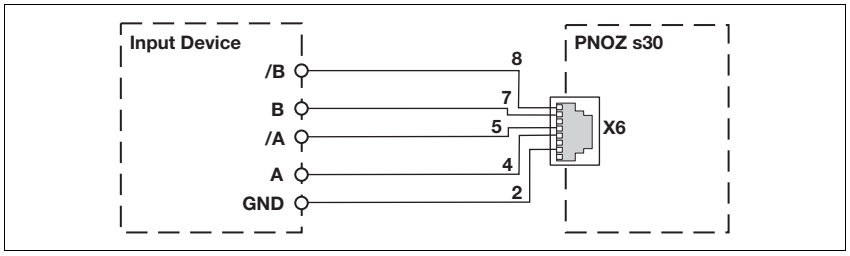

Connect incremental encoder with Z index to speed monitor

Encoder types:
- TTL single Z Index
- HTL single Z Index

Please note:
- Tracks /A and /B must remain free

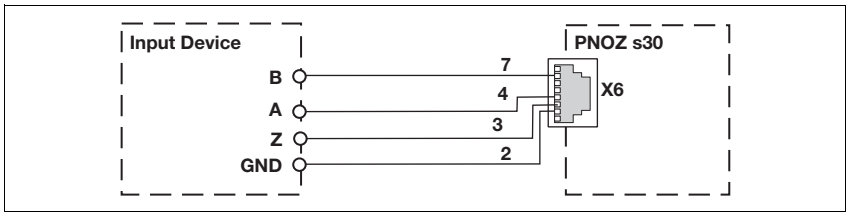

Encoder types:
- TTL diff. Z Index
- HTL diff. Z Index
- sin/cos 1 Vss Z Index

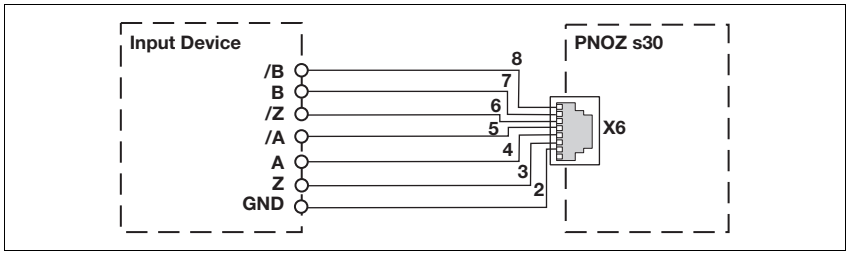

Up to PL e of EN ISO 13849-1
PNOZ s30

Connect incremental encoder to the speed monitor via an adapter

The adapter (e.g. PNOZ msi6p) is connected between the incremental encoder and the drive. The output on the adapter is connected to the RJ-45 female connector on the speed monitor.

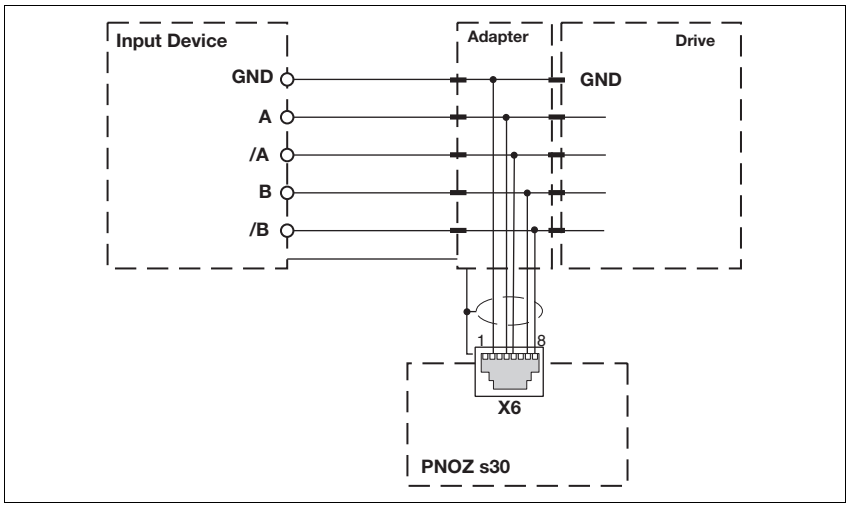

Connection of proximity switch and incremental encoder

Encoder types:
- TTL single Z Freq. Ini pnp
- HTL single Z Freq. Ini pnp

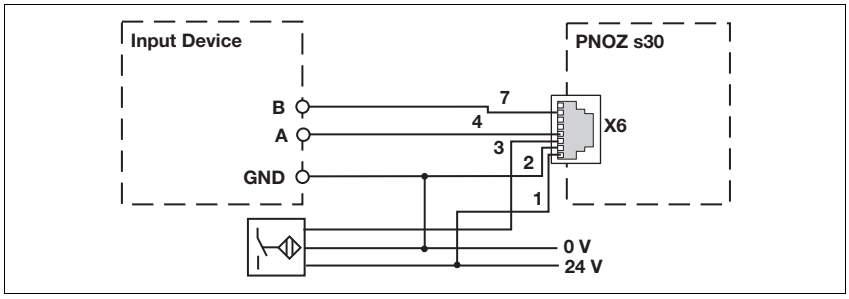

Up to PL e of EN ISO 13849-1
PNOZ s30

Encoder types:
- TTL differential Z Freq. Ini pnp
- HTL differential Z Freq. Ini pnp
- sin/cos 1 Vss Z Freq. Ini pnp
- Hiperface Z Freq. Ini pnp

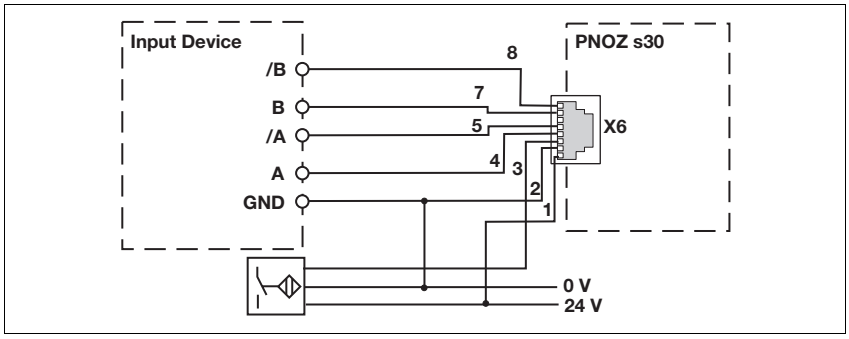

Reset circuit

Automatic reset	Monitored reset
must only be configured	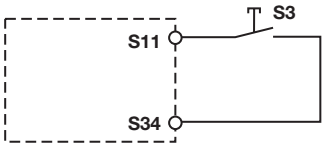

Feedback circuit

Link	Contacts from external contactors
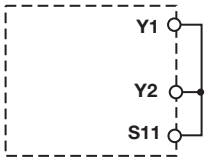	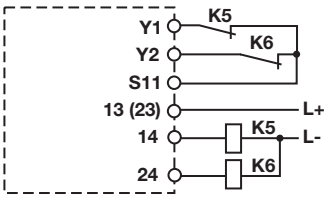

Up to PL e of EN ISO 13849-1
PNOZ s30

Terminal configuration

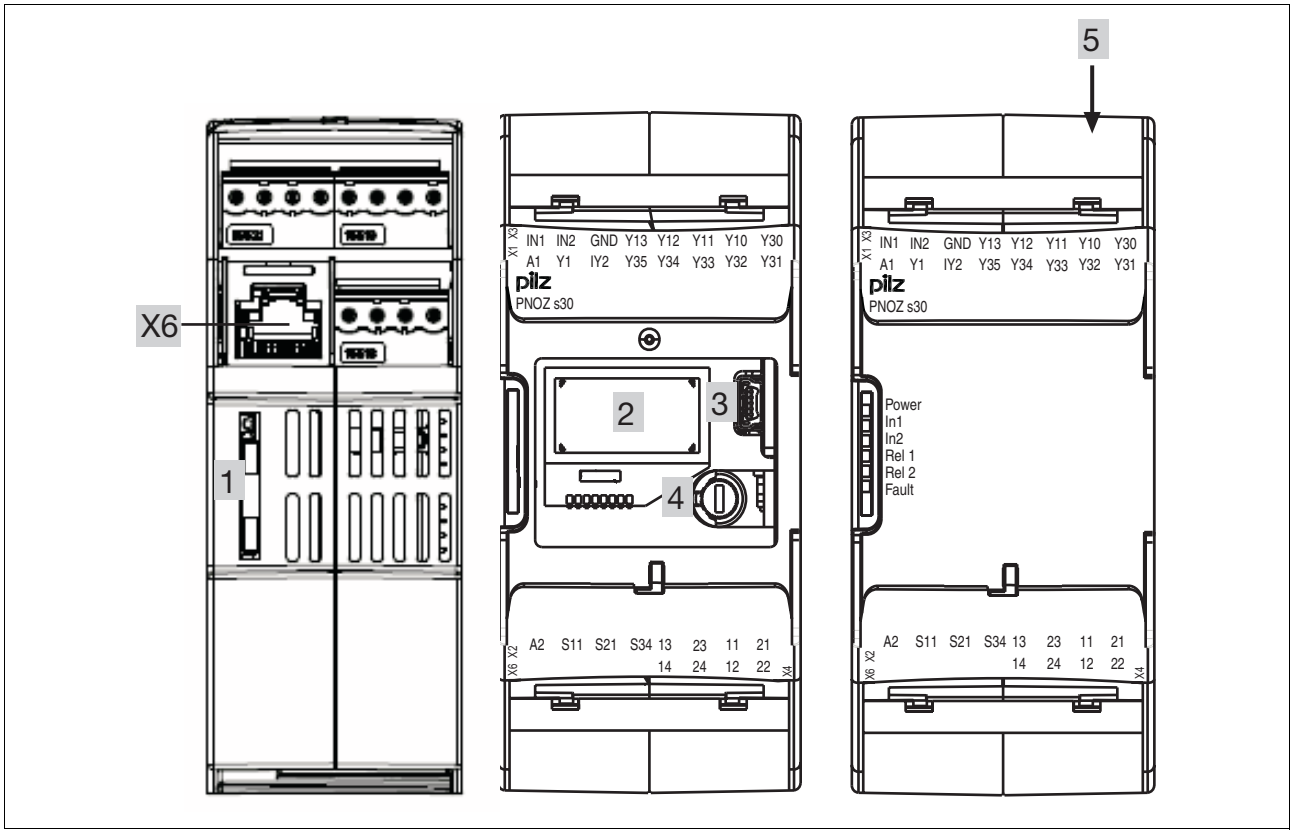

Left: Side view, centre: Front view without cover, right: Front view with cover

Up to PL e of EN ISO 13849-1
PNOZ s30

Installation

Install base unit without contact expander module:

- Ensure that the plug terminator is inserted at the side of the unit.

Connect base unit and PNOZsigma contact expander module:

- Remove the plug terminator at the side of the base unit and at the contact expander module.
- Connect the base unit and the contact expander module to the supplied connector before mounting the units to the DIN rail.

Control cabinet installation

- The unit should be installed in a control cabinet with a protection type of at least IP54.
- It is preferable to install the device on a horizontal DIN rail in order to ensure the best possible convection.
- Use the locking element on the rear of the device to attach it to the DIN rail.
- Push the device upwards or downwards before lifting it from the DIN rail.

Dimensions

*with spring-loaded terminals

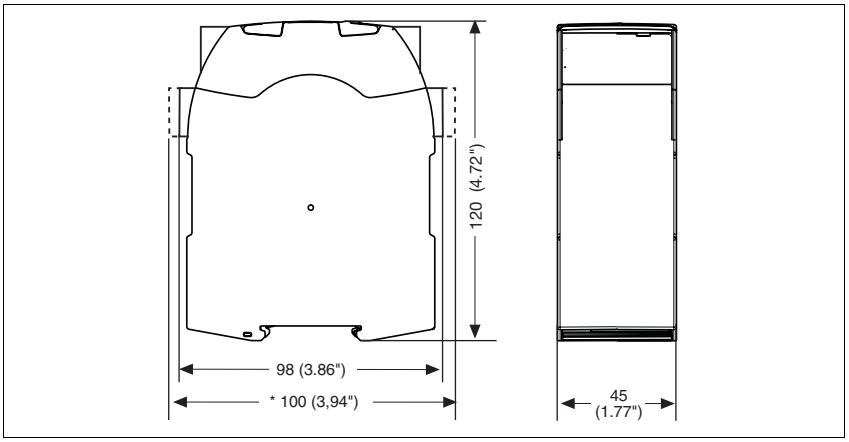

Up to PL e of EN ISO 13849-1
PNOZ s30

Notice

This data sheet is only intended for use during configuration. Please refer to the operating manual for installation and operation.

Service life graph

The service life graphs indicate the number of cycles from which failures due to wear must be expected. The wear is mainly caused by the electrical load; the mechanical load is negligible.

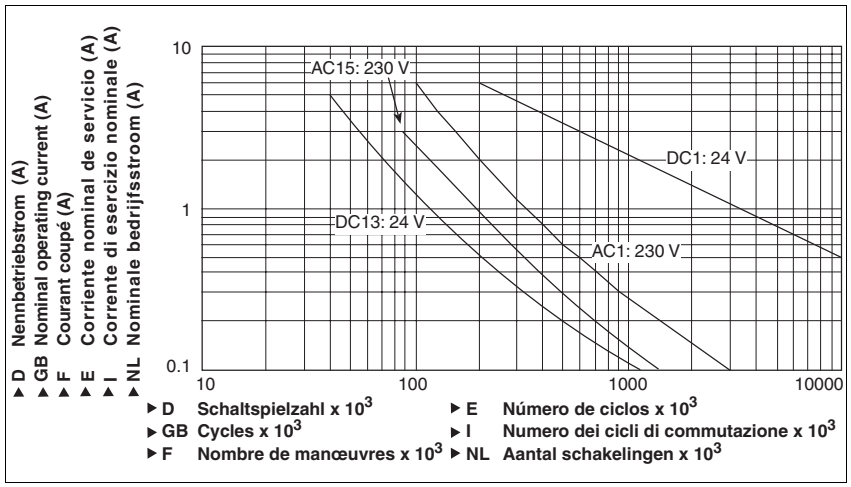

Example

- Inductive load: 0.2 A
- Utilisation category: AC15
- Contact service life: 700 000 cycles

Provided the application requires fewer than 700 000 cycles, the PFH value (see technical details) can be used in the calculation.
To increase the service life, sufficient spark suppression must be provided on all output contacts. With capacitive loads, any power surges that occur must be noted. With contactors, use freewheel diodes for spark suppression.

Technical details

Electrical data	
Supply Voltage	
Supply voltage U_B AC/DC	**24 - 240 V**
Voltage tolerance	**-15 %/+10 %**
Power consumption at U_B AC	**9.0 VA**
Power consumption at U_B DC	**5.5 W**
Max. inrush current at U_B	**10.00 A**
Frequency range AC	**50 - 60 Hz**
Residual ripple DC	**160 %**
Continuous duty	**100 %**
Voltage and current at	
Reset circuit DC: **24.0 V**	**5.0 mA**
Feedback loop DC: **24.0 V**	**5.0 mA**
Max. inrush current impulse	
	0.06 A
Feedback loop	**0.06 A**
Min. unit fuse protection	**1.00 A**
Max. unit fuse protection F1	**Max. cable cross section**
Proximity switch input	
Number of inputs	**2**

Up to PL e of EN ISO 13849-1
PNOZ s30

Proximity switch input	
Input signal level	
Signal level at "1"	**11 - 30 V**
Signal level at "0"	**-3 - 5 V**
Input resistance	**22 kOhm**
Input's frequency range	**0 - 1,000 kHz**
Configurable monitoring frequency without hysteresis	**0 - 1,000 kHz**
Input for incremental encoder/proximity switch (RJ45 connector)	
Number of inputs	**1**
Input signal level	**0.5 - 30.0 Vss**
Phase position for the differential signals A,/A and B,/B	**90° ±30°**
Overload protection	**-30 - 30 V**
Input resistance	**20.0 kOhm**
Input's frequency range	**0 - 1,000 kHz**
Configurable monitoring frequency without hysteresis	**0 - 1,000 kHz**
Connection type (incremental encoder)	**RJ45 female connector, 8-pin**
Select inputs	
Number of inputs	**4**
Input signal level	
Signal level at "1"	**15 V**
Signal level at "0"	**5 V**
Input current	**5 mA**
Semiconductor outputs	
Number	**4**
Semiconductor outputs (short circuit proof)	**24.0 V** DC,**50 mA**
External supply voltage	**24.0 V** DC
Voltage tolerance	**-20% / +20%**
Relay outputs	
Number of output contacts	
Safety contacts (S) instantaneous:	**2**
Auxiliary contacts (N/C):	**2**
Utilisation category in accordance with **EN 60947-4-1**	
Safety contacts: AC1 at **240 V**	I_{min}: **0.01 A** , I_{max}: **4.0 A** P_{max}: **1000 VA**
Safety contacts: DC1 at **24 V**	I_{min}: **0.01 A** , I_{max}: **4.0 A** P_{max}: **100 W**
Auxiliary contacts: AC1 at **240 V**	I_{min}: **0.01 A** , I_{max}: **4.0 A** P_{max}: **1000 VA**
Auxiliary contacts: DC1 at **24 V**	I_{min}: **0.01 A** , I_{max}: **4.0 A** P_{max}: **100 W**
Utilisation category in accordance with **EN 60947-5-1**	
Safety contacts: AC15 at **230 V**	I_{max}: **3.0 A**
Safety contacts: DC13 at **24 V** (6 cycles/min)	I_{max}: **4.0 A**
Auxiliary contacts: AC15 at **230 V**	I_{max}: **3.0 A**
Auxiliary contacts: DC13 at **24 V** (6 cycles/min)	I_{max}: **4.0 A**
Conventional thermal current	**4.0 A**
Contact material	**AgCuNi + 0.2 µm Au**

Up to PL e of EN ISO 13849-1
PNOZ s30

Relay outputs	
External contact fuse protection (I_K = 1 kA) to **EN 60947-5-1**	
Blow-out fuse, quick	
Safety contacts:	**6 A**
Auxiliary contacts:	**6 A**
Blow-out fuse, slow	
Safety contacts:	**4 A**
Auxiliary contacts:	**4 A**
Circuit breaker 24 VAC/DC, characteristic B/C	
Safety contacts:	**4 A**
Auxiliary contacts:	**4 A**
Timers	
Switch-on delay	
with automatic reset typ.	**35 ms**
with automatic reset max.	**50 ms**
with automatic reset after power on typ.	**3,000 ms**
with automatic reset after power on max.	**4,000 ms**
with manual reset typ.	**60 ms**
with manual reset max.	**100 ms**
Delay-on de-energisation	
with power failure typ. U_B AC/DC: **24 V**	**25 ms**
with power failure max. U_B AC/DC: **24 V**	**50 ms**
with power failure typ. U_B AC : **240 V**	**100 ms**
with power failure max. U_B AC : **240 V**	**150 ms**
after the safety function is triggered, typ.	**8 ms**
after the safety function is triggered, max.	**15 ms**
Recovery time at max. switching frequency 1/s	
after power failure	**1000 ms**
Reaction time after limit value is exceeded	**1/f_ist + 16 ms**
Waiting period with a monitored reset	
with rising edge	**30 ms**
with falling edge	**30 ms**
Min. start pulse duration with a monitored reset	
with rising edge	**30 ms**
with falling edge	**30 ms**
Supply interruption before de-energisation	**15 ms**
Switch delay (selectable)	**0 - 30 s**
Switch-on delay on the function inputs (selectable)	**0 - 30 s**
Start-up suppression time (selectable)	**0 - 30 s**
Environmental data	
EMC	**EN 60947-5-1**, **EN 61000-6-2**, **EN 61000-6-3**
Vibration to **EN 60068-2-6**	
Frequency	**10 - 55 Hz**
Amplitude	**0.35 mm**
Climatic suitability	**EN 60068-2-78**
Airgap creepage in accordance with **EN 60947-1**	
Pollution degree	**2**
Overvoltage category	**III / II**
Rated insulation voltage	**250 V**
Rated impulse withstand voltage	**4.00 kV**
Ambient temperature	**-10 - 55 °C**
Storage temperature	**-40 - 85 °C**
Protection type	
Mounting (e.g. cabinet)	**IP54**
Housing	**IP30**
Terminals	**IP20**

Up to PL e of EN ISO 13849-1
PNOZ s30

Mechanical data	
Housing material	
Housing	**PC**
Front	**PC**
Cross section of external conductors with screw terminals	
1 core flexible	**0.25 - 2.50 mm² , 24 - 12 AWG** No. 750330
2 core, same cross section, flexible:	
with crimp connectors, without insulating sleeve	**0.25 - 1.00 mm² , 24 - 16 AWG** No. 750330
without crimp connectors or with TWIN crimp connectors	**0.20 - 1.50 mm² , 24 - 16 AWG** No. 750330
Torque setting with screw terminals	**0.50 Nm** No. 750330
Connection type	**spring-loaded terminal** No. 751330 **screw terminal** No. 750330
Spring-loaded terminals: Terminal points per connection	**2** No. 751330
Stripping length	**9 mm** No. 751330
Dimensions	
Height	**100.0 mm** No. 751330 **98.0 mm** No. 750330
Width	**45.0 mm**
Depth	**120.0 mm**
Weight	**410 g**

Safety characteristic data

Unit	Operating mode	EN ISO 13849-1 PL	EN 954-1 Category	EN IEC 62061 SIL CL	PFH [1/h]	t_M [year]
PNOZ s30	Monitoring 1 input device	**PL d** (**Cat. 2**)	**Cat. 2**	**SIL CL 2**	**3.28E-08**	**20**
PNOZ s30	Monitoring 2 input devices	**PL e** (**Cat. 3**)	**Cat. 3**	**SIL CL 3**	**1.50E-08**	**20**

All the units used within a safety function must be considered when calculating the safety characteristic data.

The standards current on **2009-06** apply.

Order reference

Type	Terminals	Order No.
PNOZ s30	With screw terminals	750 330
PNOZ s30 C	With spring-loaded terminals	751 330

Tools

PNOZ s terminator plug	Terminator		10 pieces	750 010
PNOZmulti Chipcard	Chip card	8 kB		779 201
PNOZmulti Chipcard Set	Chip card	8 kB	10 pieces	779 200
PNOZmulti Chipcard	Chip card	32 kB		779 211
PNOZmulti Chipcard Set	Chip card	32 kB	10 pieces	779 212
Chipcard Holder	Chip card holder			779 240
PNOZmulti Seal	Chip card seal		10 pieces	779 250
PNOZ s Set3 Screw Loaded Terminals	Set of plug-in screw terminals		1 piece	750014
PNOZ s Set3 Spring Loaded Terminals	Set of plug-in spring-loaded terminals		1 piece	751014