E30070

Cover plug for process connections

ADAPTER PLUG G1

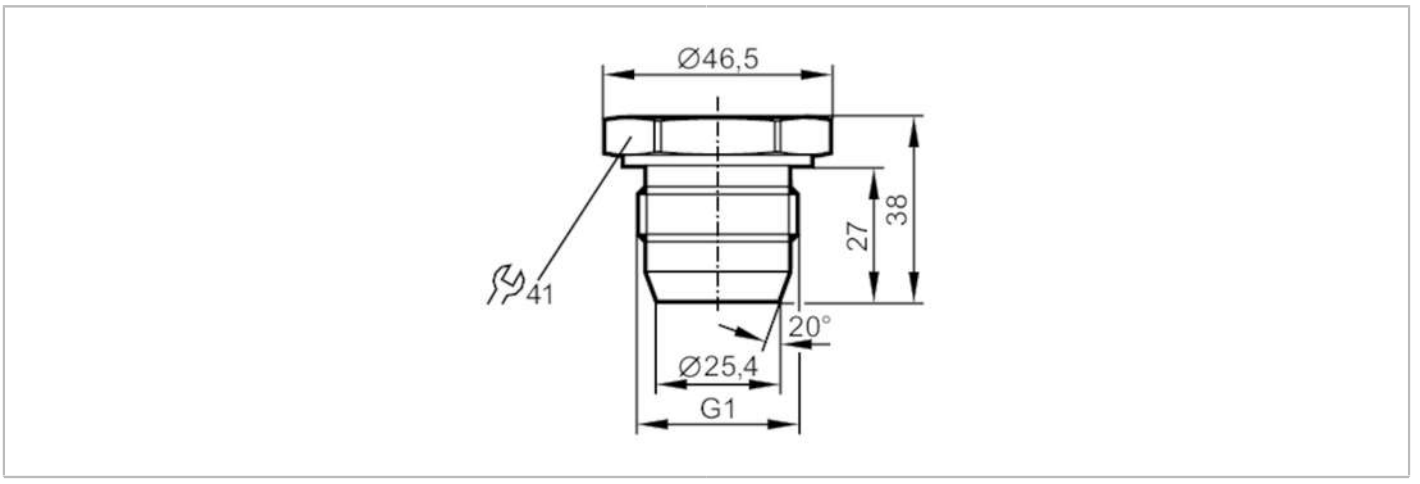

EC 1935/2004

Mechanical data		
Weight	[g]	260.5
Materials (wetted parts)		stainless steel (1.4404 / 316L) surface characteristics : Ra<0,6 / Rz -
Process connection		threaded connection G 1 external thread
Remarks		
Pack quantity		1 pcs.