

620 Series Tubeaxial

60x60x25mm

- DC fans with electronically commutated external rotor motor. Fully integrated commutation electronics.
- With electronic protection against reverse polarity, blocking and overloading by PTC-resistor; partially impedance protected.
- Mounting from either face using four 3.7 mm holes.
- Fan of fiberglass reinforced plastic. PBTP housing, PA impeller.
- Air exhaust over struts. Rotational direction CW looking at rotor.
- Electrical connection via 2 leads AWG 22, TR 64. Stripped and tinned ends.
- UL, CSA, VDE approvals on most models, please contact application engineering.

Part Number	Curve	CFM @ 0	VDC	Volt. Range	Power (W)	dBA	Max Amb. Temp C	Bearing Type	Features	Wgt. (lbs)
622L	1	12.4	12	8 to 15	0.53	22	85	Ball	Leads	0.19
622M	2	17.7	12	8 to 15	1.00	29	75	Ball	Leads	0.19
622N	3	23.5	12	8 to 15	1.90	36	70	Ball	Leads	0.19
622H	4	27.1	12	8 to 15	2.30	39	70	Ball	Leads	0.19
622HH	5	33.0	12	8 to 15	3.50	43	70	Ball	Leads	0.19
624L	1	12.4	24	18 to 28	1.00	22	70	Ball	Leads	0.19
624M	2	17.7	24	18 to 28	1.50	29	70	Ball	Leads	0.19
624N	3	23.5	24	18 to 28	2.20	36	70	Ball	Leads	0.19
624H	4	27.1	24	18 to 28	2.30	39	70	Ball	Leads	0.19
624HH	5	33.0	24	18 to 28	3.60	43	70	Ball	Leads	0.19

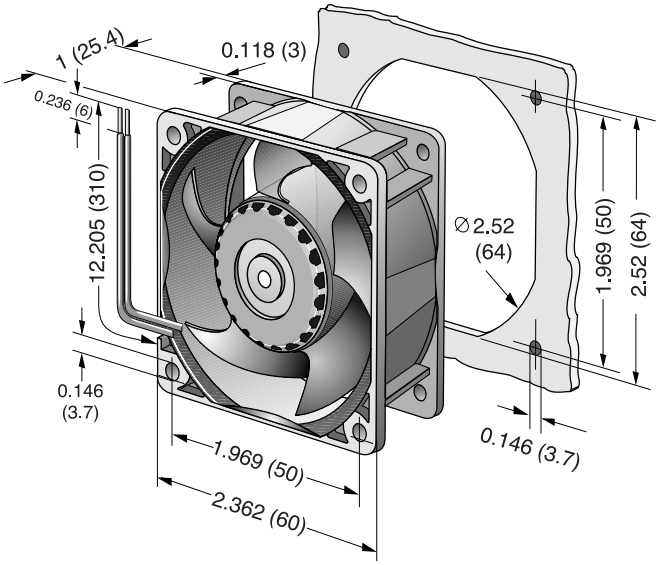

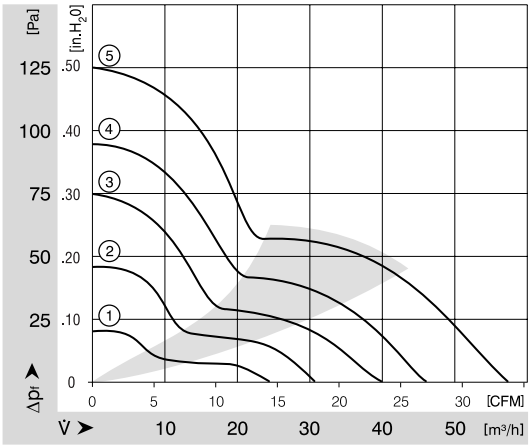

ebmpapst