MURR ELEKTRONIK
stay connected

MIRO TR 24VDC 24VDC 10A FK OPTO-COUPLER MODULE

IN: 53 VDC - OUT: 48 VDC / 10 A

Transistor 10 A
24 V DC
Spring clamp terminals

Link to Product

Illustration



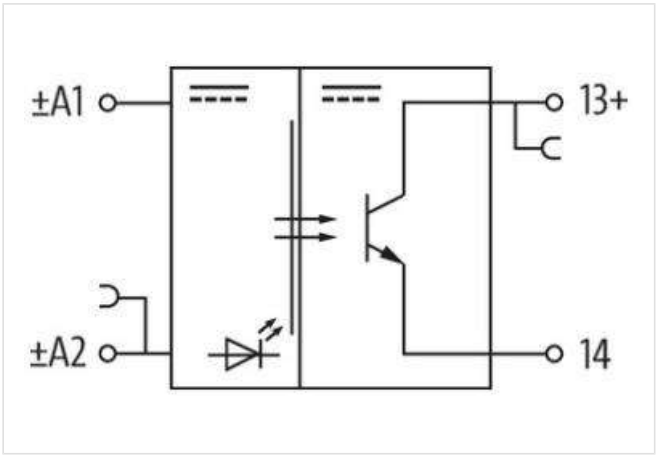

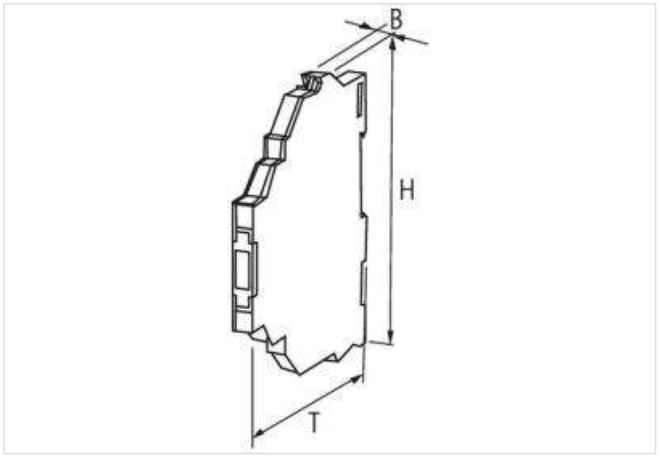

Product may differ from Image

Commercial data

ECLASS-6.0	27371601
ECLASS-6.1	27371604
ECLASS-7.0	27371604
ECLASS-8.0	27371604
ECLASS-9.0	27371604
ECLASS-10.1	27371604

The information in this Product-PDF has been compiled with the utmost care.
Liability for the correctness completeness and topicality of the information is restricted to gross negligence. Version: 2024-01-31

ECLASS-11.1	27371604
ECLASS-12.0	27371604
ETIM-5.0	EC001504
customs tariff number	85414900
GTIN	4048879021746
Packaging unit	1
Electrical data | Input	
Input voltage OFF DC min.	0 V
Input voltage OFF DC max.	5 V
Input voltage DC min.	10 V
Input voltage DC max.	53 V
Current input DC	10 mA
Electrical data | Output	
Switch-off delay resistive load max.	5000 µs
On-delay resistive load max.	2000 µs
Quiescent current OFF max.	0,025 mA
Switching frequency inductive max.	0,1 Hz
Switching frequency ohmic max.	1 Hz
Voltage switching DC min.	5 V
Switching voltage DC max.	48 V
Current switching min.	1 mA
Switching current max.	10 A
Voltage drop DC max.	0,12 V
Diagnostics	
Status indication LED	yellow
Device protection | Electrical	
Rated insulation voltage	2750 V
Device protection | Media	
Flame resistance	flame retardant
Mechanical data | Material data	
Color housing	black
Material housing	Plastic
Mechanical data | Mounting data	
Mounting method	geschnappt
Suitable for mounting type	mounting rail, (EN 60715)
Height	78 mm
Width	6,2 mm
Depth	70 mm
Environmental characteristics | Climatic	
Operating temperature min.	-20 °C
Operating temperature max.	60 °C
Connection type 4	
Connection	Spring clamp terminals FK
Family construction form	terminal
Gender	female
Color contact carrier	black
No. of poles	1
PIN 1	13 +
Connection	Spring clamp terminals FK
Family construction form	terminal

The information in this Product-PDF has been compiled with the utmost care.
Liability for the correctness completeness and topicality of the information is restricted to gross negligence. Version: 2024-01-31

Gender	female
Color contact carrier	black
No. of poles	1
PIN 1	14
Connection	Spring clamp terminals FK
Family construction form	terminal
Gender	female
Color contact carrier	black
No. of poles	1
PIN 1	A 1
Connection	Spring clamp terminals FK
Family construction form	terminal
Gender	female
Color contact carrier	black
No. of poles	1
PIN 1	A 2

The information in this Product-PDF has been compiled with the utmost care.
Liability for the correctness completeness and topicality of the information is restricted to gross negligence. Version: 2024-01-31