Datasheet - SPACER BN 31/33

Safety sensors / BNS 33 / Accessories

☒ Preferred typ

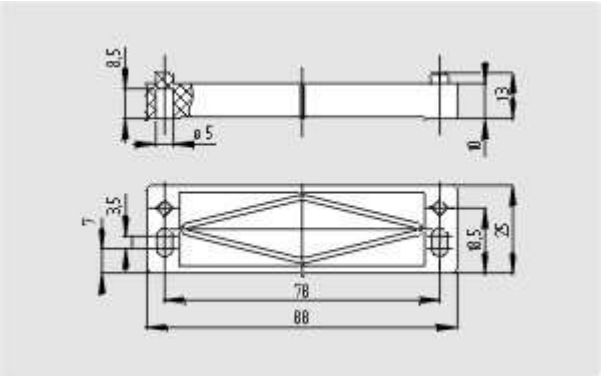

(Minor differences between the printed image and the original product may exist!)

• to mount the magnetic safety sensor and actuator on ferromagnetic material

Ordering details

Product type description	DISTANZSTUECK BN 31/33
Article number	101158893
EAN code	4030661183008
eCl@ss	27-27-92-91

Global Properties

Product name	DISTANZSTUECK
Weight	13 g

Images