Operating Instructions

Vibrating level switch for liquids

VEGASWING 51

- transistor (PNP)

With extended status indication



Document ID: 40552

Contents

1 About this document
1.1 Function ... 3
1.2 Target group ... 3
1.3 Symbolism used ... 3

2 For your safety
2.1 Authorised personnel ... 4
2.2 Appropriate use ... 4
2.3 Warning about incorrect use ... 4
2.4 General safety instructions ... 4
2.5 Safety label on the instrument ... 4
2.6 CE conformity ... 5
2.7 Environmental instructions ... 5

3 Product description
3.1 Configuration ... 6
3.2 Principle of operation ... 6
3.3 Operation ... 7
3.4 Storage and transport ... 7

4 Mounting
4.1 General instructions ... 9
4.2 Instructions for installation ... 11

5 Connecting to power supply
5.1 Preparing the connection ... 12
5.2 Wiring plan ... 12

6 Setup
6.1 Indication of the switching status ... 16
6.2 Simulation ... 16
6.3 Function chart ... 17

7 Maintenance and fault rectification
7.1 Maintenance ... 18
7.2 Rectify faults ... 18
7.3 Instrument repair ... 19

8 Dismounting
8.1 Dismounting steps ... 20
8.2 Disposal ... 20

9 Supplement
9.1 Technical data ... 21
9.2 Dimensions ... 24

40552-EN-130322

Editing status: 2013-03-21

1 About this document

1.1 Function

This operating instructions manual provides all the information you need for mounting, connection and setup as well as important instructions for maintenance and fault rectification. Please read this information before putting the instrument into operation and keep this manual accessible in the immediate vicinity of the device.

1.2 Target group

This operating instructions manual is directed to trained specialist personnel. The contents of this manual should be made available to these personnel and put into practice by them.

1.3 Symbolism used



Information, tip, note
This symbol indicates helpful additional information.



Caution: If this warning is ignored, faults or malfunctions can result.

Warning: If this warning is ignored, injury to persons and/or serious damage to the instrument can result.

Danger: If this warning is ignored, serious injury to persons and/or destruction of the instrument can result.



Ex applications
This symbol indicates special instructions for Ex applications.

• **List**
The dot set in front indicates a list with no implied sequence.

→ **Action**
This arrow indicates a single action.

1 **Sequence**
Numbers set in front indicate successive steps in a procedure.



Battery disposal
This symbol indicates special information about the disposal of batteries and accumulators.

2 For your safety

2.1 Authorised personnel

All operations described in this operating instructions manual must be carried out only by trained specialist personnel authorised by the plant operator.

During work on and with the device the required personal protective equipment must always be worn.

2.2 Appropriate use

The VEGASWING 51 is a sensor for level detection.

You can find detailed information on the application range in chapter "*Product description*".

Operational reliability is ensured only if the instrument is properly used according to the specifications in the operating instructions manual as well as possible supplementary instructions.

For safety and warranty reasons, any invasive work on the device beyond that described in the operating instructions manual may be carried out only by personnel authorised by the manufacturer. Arbitrary conversions or modifications are explicitly forbidden.

2.3 Warning about incorrect use

Inappropriate or incorrect use of the instrument can give rise to application-specific hazards, e.g. vessel overfill or damage to system components through incorrect mounting or adjustment.

2.4 General safety instructions

This is a high-tech instrument requiring the strict observance of standard regulations and guidelines. The user must take note of the safety instructions in this operating instructions manual, the country-specific installation standards as well as all prevailing safety regulations and accident prevention rules.

The instrument must only be operated in a technically flawless and reliable condition. The operator is responsible for trouble-free operation of the instrument.

During the entire duration of use, the user is obliged to determine the compliance of the necessary occupational safety measures with the current valid rules and regulations and also take note of new regulations.

2.5 Safety label on the instrument

The safety approval markings and safety tips on the device must be observed.

40552-EN-130322

2.6 CE conformity

The device fulfills the legal requirements of the applicable EC guidelines. By affixing the CE marking, we confirm successful testing of the product.

You can find the conformity certificate in the download section of our homepage.

2.7 Environmental instructions

Protection of the environment is one of our most important duties. That is why we have introduced an environment management system with the goal of continuously improving company environmental protection. The environment management system is certified according to DIN EN ISO 14001.

Please help us fulfill this obligation by observing the environmental instructions in this manual:

- Chapter "*Packaging, transport and storage*"
- Chapter "*Disposal*"

3 Product description

3.1 Configuration

Scope of delivery

The scope of delivery encompasses:

- VEGASWING 51 point level switch
- Test magnet
- Documentation
  - this operating instructions manual
  - if necessary, certificates

Constituent parts

The VEGASWING 51 consists of the components:

- Housing with electronics
- Process fitting with tuning fork



Fig. 1: VEGASWING 51

Type plate

The nameplate contains the most important data for identification and use of the instrument:

- Article number
- Serial number
- Technical data
- Article numbers, documentation

With the serial number, you can access the delivery data of the instrument via www.vega.com, "*VEGA Tools*" and "*serial number search*". In addition to the type label outside, you can also find the serial number on the inside of the instrument.

3.2 Principle of operation

Application area

VEGASWING 51 is a point level sensor with tuning fork for level detection.

It is designed for industrial use in all areas of process technology and can be used in liquids.

Typical applications are overfill and dry run protection. With a tuning fork of only 38 mm length, VEGASWING 51 can be also mounted e.g. in pipelines from DN 25. The small tuning fork allows use in vessels, tanks and pipes. Thanks to its simple and robust measuring system, VEGASWING 51 is virtually unaffected by the chemical and physical properties of the liquid.

It functions even under difficult conditions such as turbulence, air bubbles, foam generation, buildup, strong external vibration or changing products.

Function monitoring
The electronics module of VEGASWING 51 continuously monitors via frequency evaluation the following criteria:

- Strong corrosion or damage on the tuning fork
- Loss of vibration
- Line break to the piezo drive

If a malfunction is detected or in case of power failure, the electronics takes on a defined switching condition, i.e. the output is open (safe condition).

Functional principle

The tuning fork is piezoelectrically energised and vibrates at its mechanical resonance frequency of approx. 1100 Hz. When the tuning fork is submerged in the product, the frequency changes. This change is detected by the integrated electronics module and converted into a switching command.

Voltage supply

VEGASWING 51 is a compact instrument, i.e. it can be operated without external evaluation system. The integrated electronics evaluates the level signal and outputs a switching signal. With this switching signal, a connected device can be operated directly (e.g. a warning system, a pump etc.).

The data for power supply are specified in chapter "*Technical data*".

3.3 Operation

The switching status of VEGASWING 51 can be checked with closed housing (signal lamp). Products with a density > 0.7 g/cm³ (0.025 lbs/in³) can be detected.

3.4 Storage and transport

Packaging

Your instrument was protected by packaging during transport. Its capacity to handle normal loads during transport is assured by a test based on ISO 4180.

The packaging of standard instruments consists of environment-friendly, recyclable cardboard. For special versions, PE foam or PE foil is also used. Dispose of the packaging material via specialised recycling companies.

Transport

Transport must be carried out under consideration of the notes on the transport packaging. Nonobservance of these instructions can cause damage to the device.

Transport inspection

The delivery must be checked for completeness and possible transit damage immediately at receipt. Ascertained transit damage or concealed defects must be appropriately dealt with.

Storage

Up to the time of installation, the packages must be left closed and stored according to the orientation and storage markings on the outside.

Unless otherwise indicated, the packages must be stored only under the following conditions:

- Not in the open
- Dry and dust free
- Not exposed to corrosive media
- Protected against solar radiation
- Avoiding mechanical shock and vibration

Storage and transport temperature

- Storage and transport temperature see chapter "*Supplement - Technical data - Ambient conditions*"
- Relative humidity 20 … 85 %

4 Mounting

4.1 General instructions

Suitability for the process conditions

Make sure that all parts of the instrument coming in direct contact with the process, especially the sensor element, process seal and process fitting, are suitable for the existing process conditions, such as process pressure, process temperature as well as the chemical properties of the medium.

You can find the specifications in chapter "*Technical data*" and on the nameplate.

Switching point

In general, VEGASWING 51 can be installed in any position. The instrument only has to be mounted in such a way that the tuning fork is at the height of the desired switching point.

Keep in mind that the swichting point can vary dependent on the installation position.

The switching point refers to the medium water (1 g/cm³/0.036 lbs/in³). Please keep in mind that the switching point of the instrument shifts when the medium has a density differing from water.

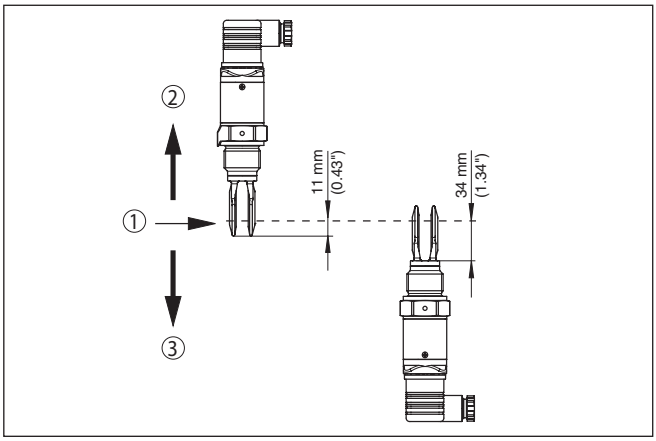

Fig. 2: Mounting vertical

1 Switching point in water
2 Switching point with lower density
3 Switching point with higher density

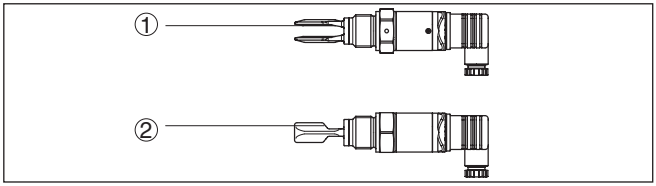

Fig. 3: Mounting horizontal

1 Switching point
2 Switching point (recommended mounting position, particularly for adhesive

products)

Moisture

Use the recommended cables (see chapter "*Connecting to power supply*") and tighten the cable gland.

You can give your VEGASWING 51 additional protection against moisture penetration by leading the connection cable downward in front of the cable entry. Rain and condensation water can thus drain off. This applies mainly to outdoor mounting as well as installation in areas where high humidity is expected (e.g. through cleaning processes) or on cooled or heated vessels.

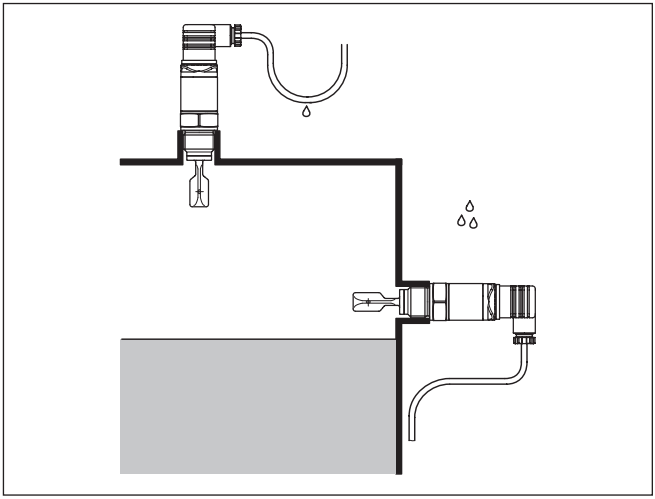

Fig. 4: Measures against moisture penetration

Transport

Do not hold VEGASWING 51 on the tuning fork.

Pressure/Vacuum

The process fitting must be sealed if there is gauge or low pressure in the vessel. Before use, check if the seal material is resistant against the measured product and the process temperature.

The max. permissible pressure is specified in chapter "*Technical data*" or on the type label of the sensor.

Handling

The vibrating level switch is a measuring instrument and must be treated accordingly. Bending the vibrating element will destroy the instrument.

Warning:
The housing must not be used to screw the instrument in! Applying tightening force can damage internal parts of the housing.

Use the hexagon above the thread for screwing in.

4.2 Instructions for installation

Adhesive products

In case of horizontal mounting in adhesive and viscous products, the surfaces of the tuning fork should be vertical in order to reduce build-up on the tuning fork. The position of the tuning fork is indicated by a marking on the hexagon of VEGASWING 51. With this, you can check the position of the tuning fork when screwing it in. When the hexagon touches the seal, the thread can still be turned by approx. half a turn. This is sufficient to reach the recommended installation position.

In adhesive and viscous products, the surfaces of the tuning fork should protrude into the vessel to avoid buildup. Therefore sockets for flanges and mountings bosses should not exceed a certain length.

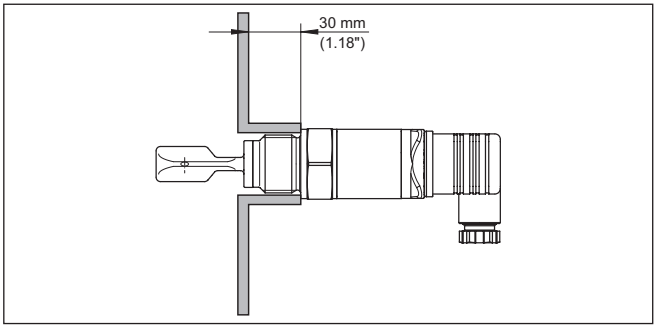

Fig. 5: Adhesive products

Inflowing medium

If VEGASWING 51 is mounted in the filling stream, unwanted false measurement signals can be generated. For this reason, mount VEGASWING 51 at a position in the vessel where no disturbances, e.g. from filling openings, agitators, etc., can occur.

Flows

To make sure the tuning fork of VEGASWING 51 generates as little resistance as possible to product flow, mount the sensor so that the surfaces are parallel to the product movement.

5 Connecting to power supply

5.1 Preparing the connection

Note safety instructions

Always keep in mind the following safety instructions:

- Connect only in the complete absence of line voltage

Connection cable

The instrument is connected with standard two-wire cable without screen. If electromagnetic interference is expected which is above the test values of EN 61326 for industrial areas, screened cable should be used.

Use cable with round cross section. Depending on the plug connection, you have to select the outer diameter of the cable respectively so that the seal effect of the cable gland is ensured.

- Valve plug ISO 4400, ø 4.5 … 7 mm
- Valve plug ISO 4400 with IDC crimping technology, ø 5.5 … 8 mm

Cable glands

Use cable with a round wire cross section and tighten the cable gland.

When mounting outdoors, on cooled vessels or in moist areas in which cleaning is made with steam or high pressure, the sealing of the cable gland is very important.

5.2 Wiring plan

Housing overview

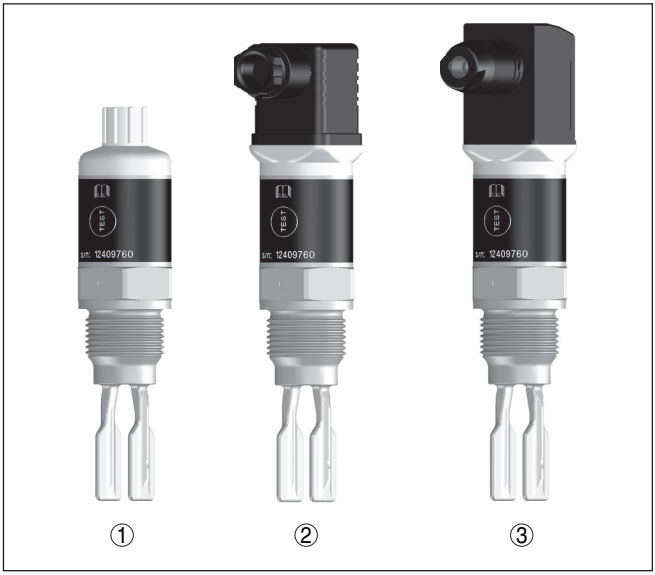

Fig. 6: Overview of the connection versions

1 M12 x 1 plug connection
2 Valve plug ISO 4400
3 Valve plug ISO 4400 with IDC method of termination

Plug versions

M12 x 1 plug connection
This plug connection requires a prefabricated cable with plug. Depending on the version, protection IP 66/IP 67 or IP 68 (0.2 bar).

Valve plug ISO 4400
For this plug version, standard cable with round wire cross-section can be used. Cable diameter 4.5 … 7 mm, protection IP 65.

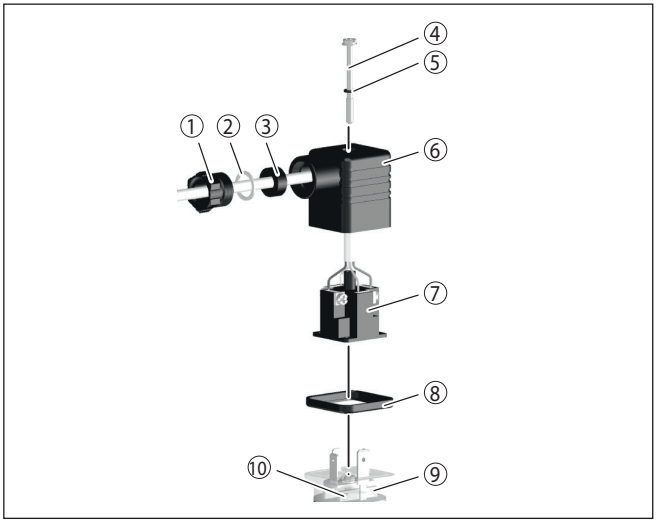

Fig. 7: Connection, valve plug ISO 4400

1 Pressure screw
2 Pressure disc
3 Seal ring
4 Fixing screw
5 Seal washer
6 Plug housing
7 Plug insert
8 Profile seal
9 Control lamp
10 VEGASWING 51

Valve plug ISO 4400 with IDC method of termination
For this plug version you can use standard cable with round wire cross-section. The inner conductors do not have to be stripped. The plug connects the conductors automatically when screwing in. Cable diameter 5.5 … 8 mm, protection IP 67.

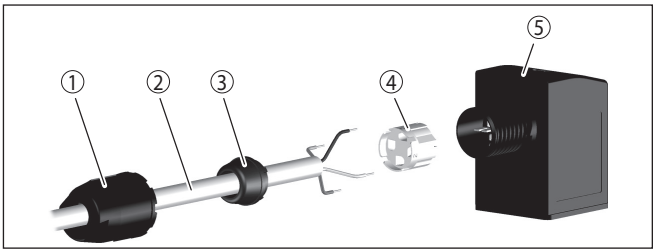

Fig. 8: Connection, valve plug ISO 4400 with IDC crimping technology

1 Compression nut
2 Cable
3 Seal ring
4 Terminal insert
5 Plug housing

Transistor output

For connection to binary inputs of a PLC.

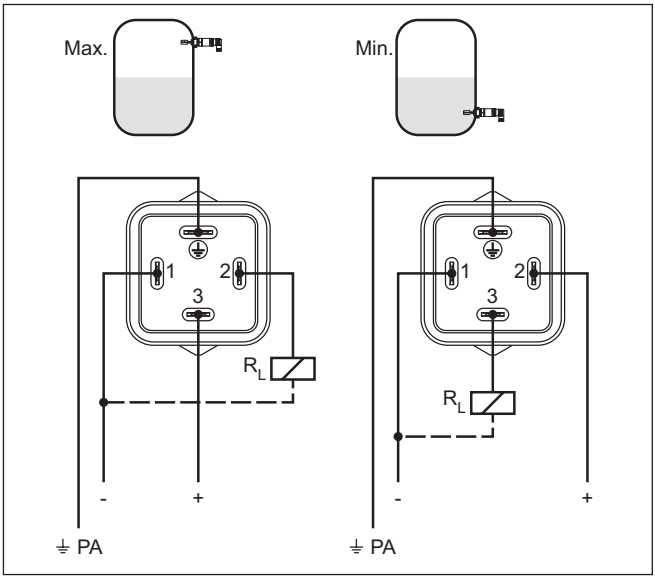

Fig. 9: Wiring plan, Transistor output with valve plug ISO 4400

PA Potential equalisation
R_L Load resistance (contactor, relay, etc.)

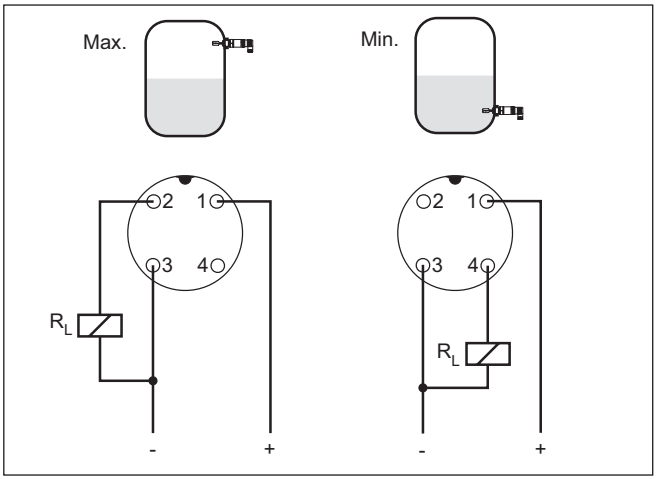

Fig. 10: Wiring plan (housing), transistor output with M12 x 1 plug connection

1 Brown
2 White
3 Blue
4 Black
R_L Load resistance (contactor, relay, etc.)

6 Setup

6.1 Indication of the switching status

The switching status of the electronics can be checked via the signal lamps (LEDs) integrated in the upper part of the housing.

The signal lamps have the following meaning:

- Green lights - voltage supply connected
- Yellow lights - vibrating element covered
- Red lights briefly - function test during instrument start (for 0.5 s)
- Red lights - shortcircuit or overload in the load circuit (sensor output high-impedance)
- Red flashes - Error on the vibrating element or the electronics (sensor output high impedance)

6.2 Simulation

The VEGASWING 51 has an integrated function for simulation of the output signal which can be activated magnetically. Please proceed as follows:

→ Hold the test magnet (accessory) against the circle symbol with the label "TEST" on the instrument housing

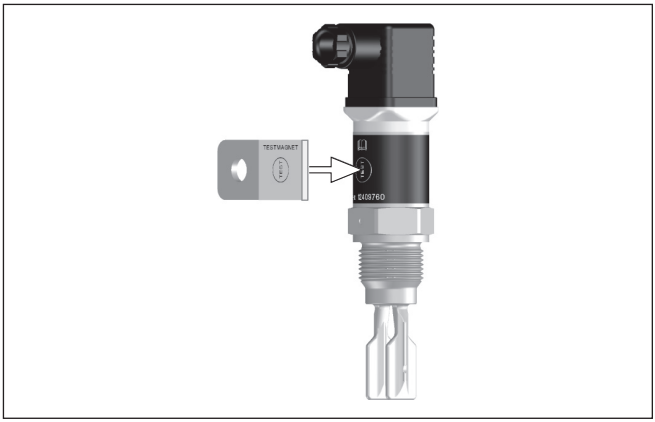

Fig. 11: Simulation of the output signal

The test magnet changes the current switching condition of the instrument. You can check the change on the signal lamp. Please note that all connected device are activated during the simulation.

If VEGASWING 51 does not switch over after several tests with the test magnet, you have to check the plug connection and the connection cable and try it again. If there is no switching function, the electronics will be defective. In this case you have to exchange the electronics or return the instrument to our repair department.

Caution:
It is absolutely necessary that you remove the test magnet from the instrument housing after the simulation.

6.3 Function chart

The following chart provides an overview of the switching conditions depending on the set mode and the level.

	Level	Switching status	Control lamp Yellow - coverage	Control lamp Green - voltage indication	Control lamp Red - fault signal
Mode max.		closed	○	☼	○
Mode max.		open	☼	☼	○
Mode min.		closed	☼	☼	○
Mode min.		open	○	☼	○
Failure	any	open	any	☼	☼

7 Maintenance and fault rectification

7.1 Maintenance

If the instrument is used properly, no special maintenance is required in normal operation.

7.2 Rectify faults

Reaction when malfunctions occur

The operator of the system is responsible for taking suitable measures to rectify faults.

Failure reasons

VEGASWING 51 offers maximum reliability. Nevertheless, faults can occur during operation. These may be caused by the following, e.g.:

- Sensor
- Process
- Voltage supply
- Signal processing

Fault rectification

The first measure to be taken is to check the output signal. In many cases, the causes can be determined this way and the faults rectified.

24 hour service hotline

Should these measures not be successful, please call in urgent cases the VEGA service hotline under the phone no. **+49 1805 858550**.

The hotline is available to you 7 days a week round-the-clock. Since we offer this service world-wide, the support is only available in the English language. The service is free of charge, only the standard telephone costs will be charged.

Checking the switching signal

Error	Cause	Rectification
Green signal lamp off	Voltage supply interrupted.	Check the voltage supply and the cable connection
	Electronics defective	Exchange the instrument or send it in for repair
Red signal lamp lights (switching output high-impedance)	Error with the electrical connection	Connect the instrument according to the wiring plan
	Shortcircuit or overload	Check the electrical connection
Red signal lamp flashes (switching output high-impedance)	Virbating frequency out of specification	Check the vibrating element on buildup and remove it
	Buildup on the vibrating element	Check the vibrating element and the sensor if there is buildup and remove it
	Vibrating element damaged	Check if the vibrating element is damage or extremely corroded

Reaction after fault rectification

Depending on the reason for the fault and the measures taken, the steps described in chapter "*Set up*" may have to be carried out again.

7.3 Instrument repair

If a repair is necessary, please proceed as follows:

You can download a return form (23 KB) from our Internet homepage www.vega.com under: "*Downloads - Forms and certificates - Repair form*".

By doing this you help us carry out the repair quickly and without having to call back for needed information.

- Print and fill out one form per instrument
- Clean the instrument and pack it damage-proof
- Attach the completed form and, if need be, also a safety data sheet outside on the packaging
- Please ask the agency serving you for the address of your return shipment. You can find the respective contact data on our website www.vega.com under: "*Company - VEGA worldwide*"

8 Dismounting

8.1 Dismounting steps



Warning:
Before dismounting, be aware of dangerous process conditions such as e.g. pressure in the vessel, high temperatures, corrosive or toxic products etc.

Take note of chapters "*Mounting*" and "*Connecting to power supply*" and carry out the listed steps in reverse order.

8.2 Disposal

The instrument consists of materials which can be recycled by specialised recycling companies. We use recyclable materials and have designed the parts to be easily separable.

WEEE directive 2002/96/EG
This instrument is not subject to the WEEE directive 2002/96/EG and the respective national laws. Pass the instrument directly on to a specialised recycling company and do not use the municipal collecting points. These may be used only for privately used products according to the WEEE directive.

Correct disposal avoids negative effects on humans and the environment and ensures recycling of useful raw materials.

Materials: see chapter "*Technical data*"

If you have no way to dispose of the old instrument properly, please contact us concerning return and disposal.

9 Supplement

9.1 Technical data

General data	
Material 316L corresponds to 1.4404 or 1.4435	
Materials, wetted parts	
– Tuning fork	316L
– Process seal	Klingersil C-4400
– Process fittings	316L
Materials, non-wetted parts	
– Housing	316L and plastic PEI
Weight approx.	250 g (9 oz)
Process fittings	
– Pipe thread, cylindrical (DIN 3852-A)	G½ A, G¾ A, G1 A
– American pipe thread, conical (ASME B1.20.1)	½ NPT, ¾ NPT, 1 NPT
– hygienic fittings	Clamp 1", Clamp 1½", Clamp 2" PN 16 DIN 32676, ISO 2852/316L, bolting DN 25 PN 40, bolting DN 40 PN 40, bolting DN 50 PN 25, SMS DN 38 PN 6
Max. torque - process fitting	
– Thread G½ A, ½ NPT	50 Nm (37 lbf ft)
– Thread G¾ A, ¾ NPT	75 Nm (55 lbf ft)
– Thread G1 A, 1 NPT	100 Nm (73 lbf ft)
Surface quality	
– Standard	R_a < 3.2 µm (1.26^{-4} in)
– Hygienic version	R_a < 0.8 µm (3.15^{-5} in)

Measuring accuracy	
Hysteresis	approx. 2 mm (0.08 in) with vertical installation
Switching delay	approx. 500 ms (on/off)
Measuring frequency	approx. 1100 Hz

Ambient conditions	
Ambient temperature on the housing	-40 … +70 °C (-40 … +158 °F)
Storage and transport temperature	-40 … +80 °C (-40 … +176 °F)

Process conditions	
Process pressure	-1 … 64 bar/-100 … 6400 kPa (-14.5 … 928 psig)
Process temperature - Standard	-40 … +100 °C (-40 … +212 °F)

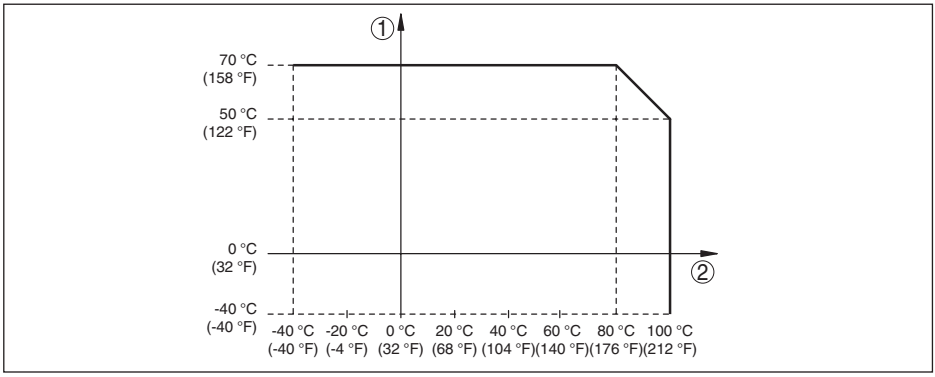

Fig. 30: Dependendency ambient temperature to process temperature

1 Ambient temperature in °C (°F)
2 Process temperature in °C (°F)

Process temperature - High temperature version (option) -40 … +150 °C (-40 … +302 °F)

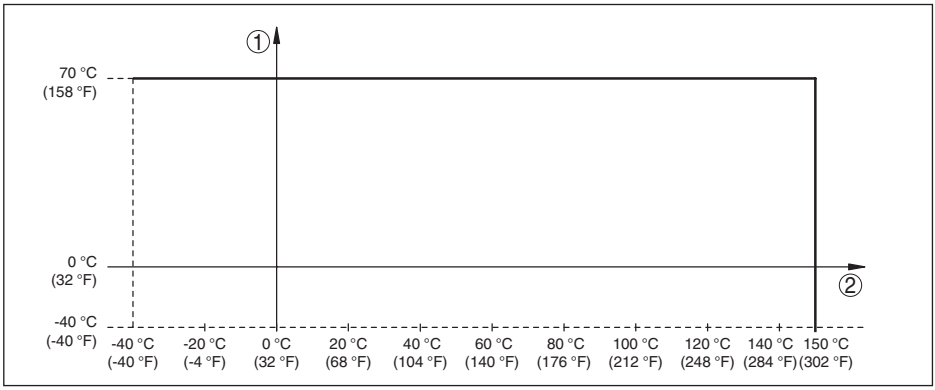

Fig. 31: Dependendency ambient temperature to process temperature

1 Ambient temperature in °C (°F)
2 Process temperature in °C (°F)

Viscosity - dynamic	0.1 … 10000 mPa s
Flow velocity	max. 6 m/s (with a viscosity of 10000 mPa s)
Density	0.7 … 2.5 g/cm³ (0.025 … 0.09 lbs/in³)

Operation

Plug connections	Specification see "*Connecting to power supply*"
Signal lamps (LED)	
– Green	Voltage supply on
– Yellow	Vibrating element covered
– Red	Failure

Output variable	
Output	Transistor output PNP
Load current	max. 250 mA (output, permanently short-circuit proof)
Voltage loss	< 3 V
Switching voltage	< 34 V DC
Blocking current	< 10 µA
Mode	
– Min./Max.	Changeover by electronic connection
– Max.	Overflow protection
– Min.	Dry run protection

Voltage supply	
Operating voltage	9.6 … 35 V DC
Power consumption	max. 0.5 W

Electromechanical data	
Valve plug ISO 4400	
– Wire cross-section	1.5 mm² (0.06 in²)
– Outer cable diameter	4.5 … 7 mm (0.18 … 0.28 in)
Valve plug ISO 4400 with IDC method of termination	
– Wire cross-section	for wire cross-section of 0.5 … 1 mm² (0.02 … 0.04 in²)
– Single-wire diameter	> 0.1 mm (0.004 in)
– Wire diameter	1.6 … 2 mm² (0.06 … 0.08 in²)
– Outer cable diameter	5.5 … 8 mm (0.22 … 0.31 in)
– Connection frequency	10 x (on the same cross-section)

Electrical protective measures	
Protection rating	
– Valve plug ISO 4400	IP 65
– Valve plug ISO 4400 with IDC method of termination	IP 67
– M12 x 1 plug connection	IP 66/IP 67 or IP 68 (0.2 bar)
Overvoltage category	III
Protection class	II

Approvals

Instruments with approvals can have different technical data depending on the version.

For that reason the associated approval documents of these instruments have to be carefully noted. They are part of the delivery or can be downloaded under www.vega.com via "*VEGA Tools*" and "*serial number search*" as well as via "*Downloads*" and "*Approvals*".

40552-EN-130322

9.2 Dimensions

VEGASWING 51, standard version - thread G½ A, ½ NPT

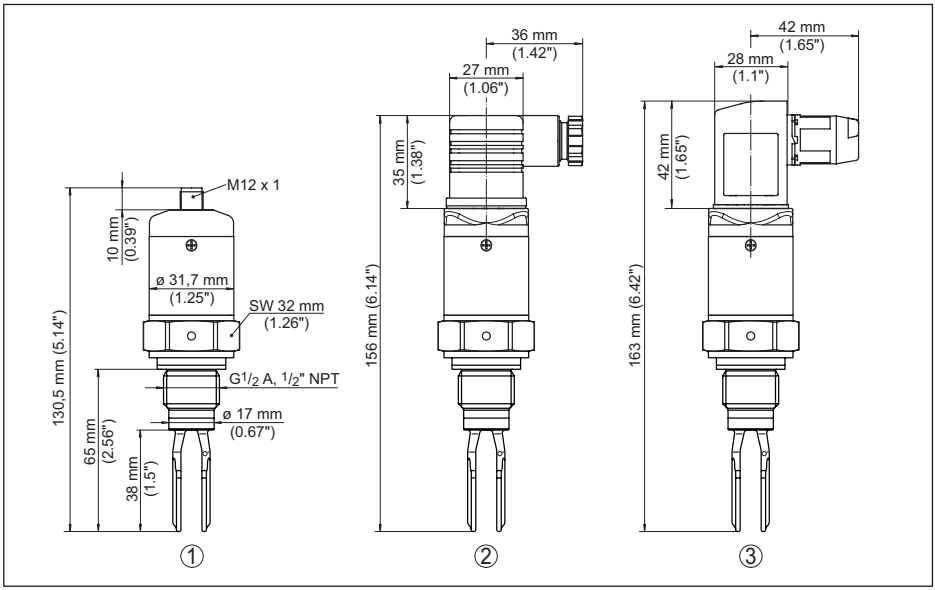

Fig. 32: VEGASWING 51, standard version - thread G½ A, ½ NPT

1 Thread G½ A (DIN ISO 228/1), ½ NPT (M12 x 1)[1)]
2 Thread G½ A (DIN ISO 228/1), ½ NPT (valve plug ISO 4400)
3 Thread G½ A (DIN ISO 228/1), ½ NPT (valve plug ISO 4400 with DC method of termination)

[1)] Keep in mind that the total length is extended by the plug connection.

VEGASWING 51, standard version - thread G¾ A, G1 A / ¾ NPT, 1 NPT

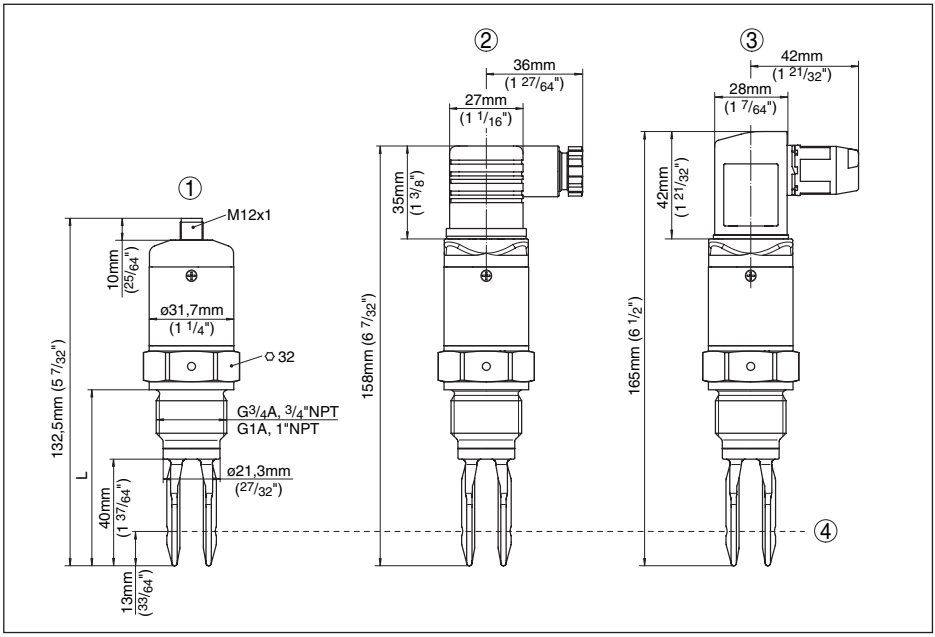

Fig. 33: VEGASWING 51, standard version - thread G¾ A, G1 A / ¾ NPT, 1 NPT

1 Thread G¾ A, G1 A (DIN ISO 228/1), ¾ NPT or 1 NPT (M12 x 1)[2)]
2 Thread G¾ A, G1 A (DIN ISO 228/1), ¾ NPT or 1 NPT (valve plug ISO 4400)
3 Thread G¾ A, G1 A (DIN ISO 228/1), ¾ NPT or 1 NPT (valve plug ISO 4400 with IDC crimping technology)
4 Switching point
L Length with G¾ A, ¾ NPT: 66 mm (2.6 in)
L Length with G1 A, 1 NPT: 69 mm (2.7 in)

[2)] Keep in mind that the total length is extended by the plug connection.

VEGASWING 51, high temperature version

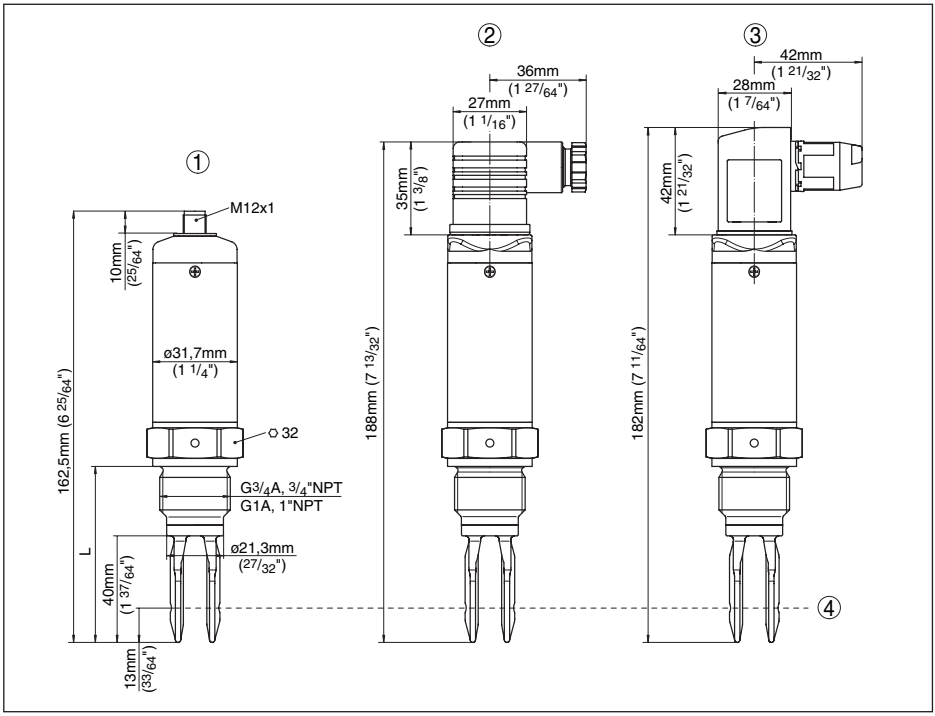

Fig. 34: VEGASWING 51, high temperature version

1 *Thread G¾ A, G1 A (DIN ISO 228/1), ¾ NPT or 1 NPT (M12 x 1)*[3)]
2 *Thread G¾ A, G1 A (DIN ISO 228/1), ¾ NPT or 1 NPT (valve plug ISO 4400)*
3 *Thread G¾ A (DIN ISO 228/1), ¾ NPT or 1 NPT (valve plug ISO 4400 with IDC method of termination)*
4 *Switching point*
L *Length with G¾ A, ¾ NPT: 66 mm (2.6 in)*
L *Length with G1 A, 1 NPT: 69 mm (2.7 in)*

[3)] Keep in mind that the total length is extended by the plug connection.

VEGASWING 51, hygienic versions

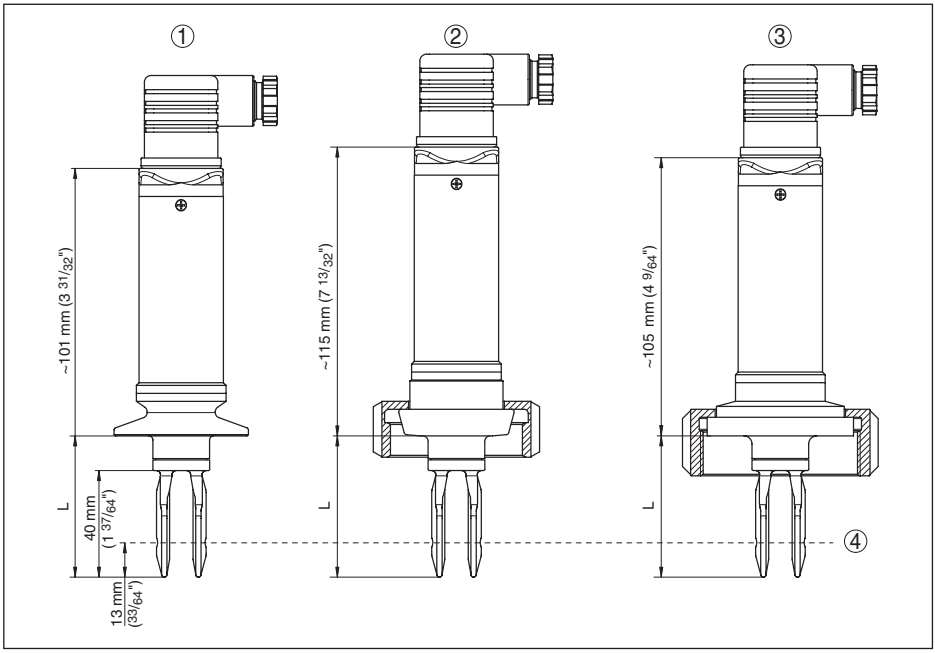

Fig. 35: VEGASWING 51, hygienic versions

1 Clamp (valve plug ISO 4400)
2 Bolting (valve plug ISO 4400)
3 SMS 1145 (valve plug ISO 4400)
4 Switching point
L Length with Tri-Clamp: 53 mm (2.1 in)
L Length with bolting: 53 mm (2.1 in)
L Length with SMS 1145: 53 mm (2.1 in)

9.3 Industrial property rights

VEGA product lines are global protected by industrial property rights. Further information see www.vega.com.

Only in U.S.A.: Further information see patent label at the sensor housing.

VEGA Produktfamilien sind weltweit geschützt durch gewerbliche Schutzrechte.

Nähere Informationen unter www.vega.com.

Les lignes de produits VEGA sont globalement protégées par des droits de propriété intellectuelle. Pour plus d'informations, on pourra se référer au site www.vega.com.

VEGA lineas de productos están protegidas por los derechos en el campo de la propiedad industrial. Para mayor información revise la pagina web www.vega.com.

Линии продукции фирмы ВЕГА защищаются по всему миру правами на интеллектуальную собственность. Дальнейшую информацию смотрите на сайте www.vega.com.

VEGA系列产品在全球享有知识产权保护。

进一步信息请参见网站<www.vega.com>。

9.4 Trademark

All the brands as well as trade and company names used are property of their lawful proprietor/ originator.

40552-EN-130322

Printing date:

All statements concerning scope of delivery, application, practical use and operating conditions of the sensors and processing systems correspond to the information available at the time of printing.
Subject to change without prior notice

© VEGA Grieshaber KG, Schiltach/Germany 2013

40552-EN-130322

VEGA Grieshaber KG
Am Hohenstein 113
77761 Schiltach
Germany

Phone +49 7836 50-0
Fax +49 7836 50-201
E-mail: info.de@vega.com
www.vega.com