

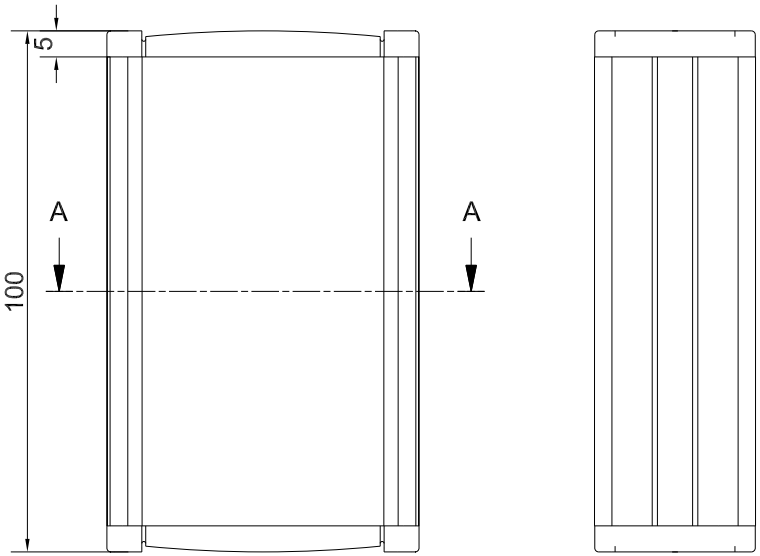

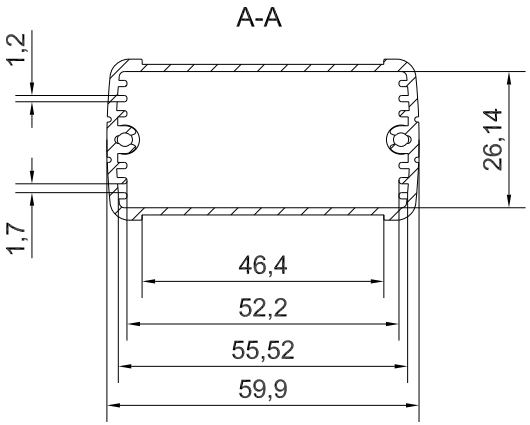

MAXIMUM PCB SIZE

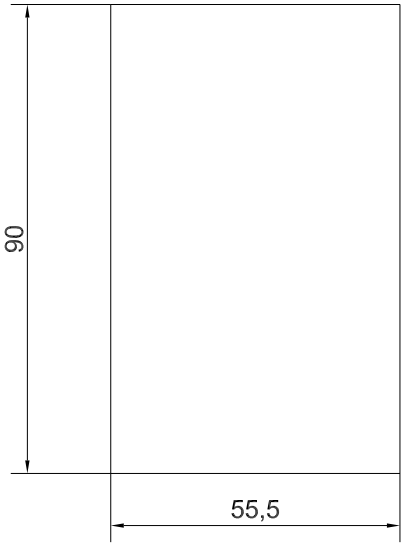

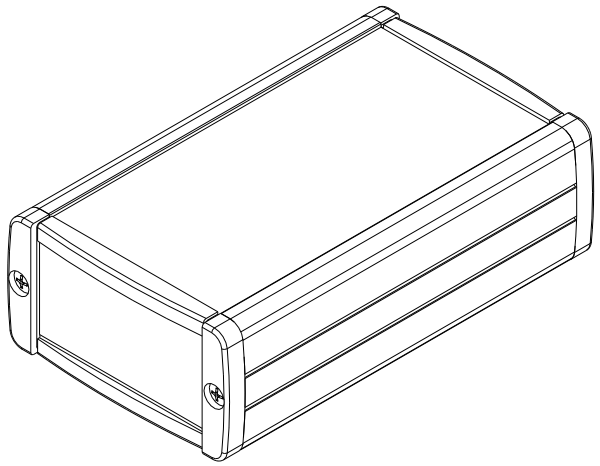

TEKO ENCLOSURES	Denomination: Assembly TEKAL-12	Part. Number: TEKAL-12
	Subject to technical modification without prior notice. Tipographical and other errors do not justify any claim for damages. All dimensions should be verified using an actual moulded part.	Rev. Index: Scale: 1:1
	This document contains proprietary information of **TEKO S.p.a.** and is tendered subject to the conditions that the information be retained in confidence not be reproducer or copied and not be used or incorporated in any product.	Date: 08/04/2005 Format design: A3