E11908

Hexagon nut

NUT M30 CUZN 10PCS.

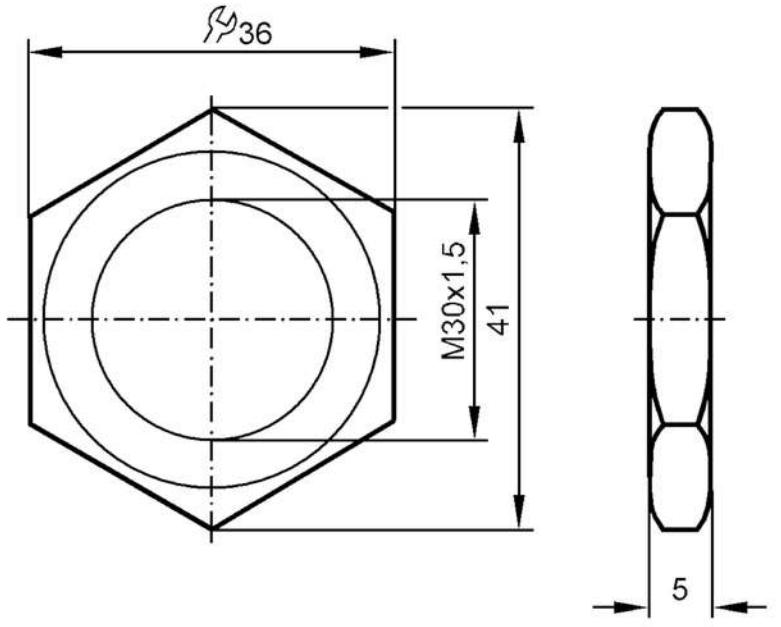

Mechanical data		
Weight	[g]	168.7
Dimensions	[mm]	M30 x 1.5
Thread designation		M30 x 1.5
Materials		brass nickel-plated
Remarks		
Pack quantity		10 pcs.