Your Expert Partner for **Human Machine Interfaces**

Actuator

Distribution by
Rs-online

22-
212.011



https://rs-online.eao.com/component/22-212.01...

Your product:



22-212.011
Actuator

FRONT

Front dimension:	36 mm x 24 mm
Front form:	Rectangular
Front bezel colour:	Black
Front bezel material:	Plastic

MOUNTING

Design:	Flush
Mounting cut-out:	22 mm x 30 mm
Mounting type:	Panel mounting

OPERATING-/INDICATION PART

Lens illumination:	Optional illuminated

ELECTRICAL CHARACTERISTICS

Switching voltage and switching current:	400 VAC, 10 A (ohmic) 400 VAC, 4 A (inductive, cos(phi) = 0.7) 250 VAC, 5 A (inductive, cos(phi) = 0.7) 125 VAC, 8 A (inductive, cos(phi) = 0.7) 110 VDC, 0.4 A (inductive, L:R = 30 ms) 60 VDC, 1.5 A (inductive, L:R = 30 ms) 24 VDC, 6 A (inductive, L:R = 30 ms)
Contacts:	1 NC
Switching rating:	400 V @ 10 A
Electrical lifetime:	50 000 cycles of operation
Electric strength:	2000 VAC, 50 Hz, 1 minute, as per IEC 60512-2-11 between all terminals and earth

MECHANICAL CHARACTERISTICS

Terminal:	Screw terminal
Contact material:	Silver
Switching action:	Momentary
Switching system:	Snap-action switching element
Switching system:	Self-cleaning, double-break snap action switching system (contact opening width 2 mm x 1.5 mm). Max. 2 normally closed or 2 normally open contacts, or one of each
Mechanical lifetime:	1 Mil. cycles of operation (RCC/RPB)
Operating force:	4.4 N ±1 N (1 switching element), 7.8 N ±1 N (2 switching element)
Operating Travel:	5.5 mm ± 0.5 mm
Travel:	> 3 mm
Terminal details 1:	Max. wire cross-section 2 mm x 2.5 mm^2 Max. wire cross-section of stranded cable 2 x 1.5 mm^2
Weight:	0.039 kg

AMBIENT CONDITION

IP Protection:	IP20 rear side, IP65 front side, according to IEC 60529
Operating temperature:	– 25 °C ... + 55 °C
Storage temperature:	– 40 °C ... + 95 °C
Shock resistance:	50 g for 11 ms, according to IEC 60512-4-3
Vibration resistance:	10 g at 10 Hz...2000 Hz, amplitude 0.75 mm (Sinusoidal), according to DIN EN 60512-4-4

CERTIFICATE

Approbations:	CB (IEC 61058-1), CSA, EAC, ENEC (EN 61058-1), UL
Conformities:	CE, UKCA, 2011 / 65 / EC (RoHS), 2014 / 35 / EU (LVD)
REACH:	REACH compliant
RoHS:	RoHS compliant

OTHER

Short Description:	Actuator, 22 mm x 30 mm, 36 mm x 24 mm, Optional illuminated, Rectangular, Black, Plastic, 1 NC, Momentary, Screw terminal
Housing colour:	Black
Housing material:	Plastic

Wiring diagrams:

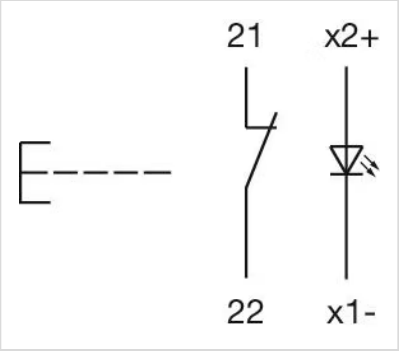

Mounting cut-outs:

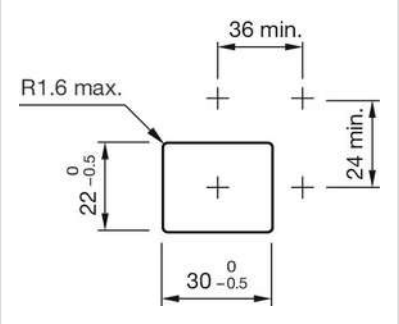

Dimension drawings:

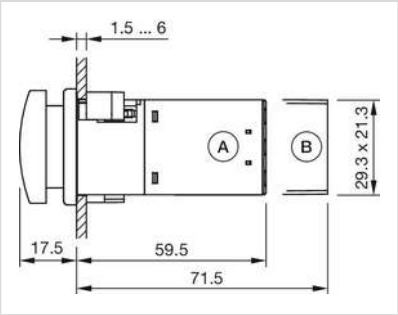

A = Screw terminal
B = Plug-in terminal 6.3 mm x 0.8 mm

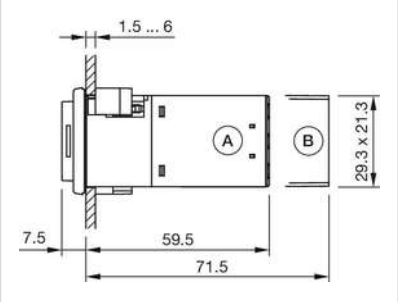

A = Screw terminal
B = Plug-in terminal 6.3 mm x 0.8 mm