Data sheet

Redundancy unit CP-C.1-A-RU
Accessory for CP-C.1 range power supplies

ABB's redundancy units are used to establish true redundancy which increases the availability of electrical systems significantly.



2CDC 271 001 F0017

Characteristics

- Decoupling of CP-C.1 power supply units with 2 inputs, each up to 20 A per input / channel
- Output up to 40 A
- True redundancy by 100 % decoupling of two parallel connected power supplies
- 2 integrated diodes for the decoupling of 2 switch mode power supplies up to 20 A

Ordering details

Description	Suitable for decoupling of two 24 V DC power supply units	PCBA	Type	Order code
2 inputs each up to 20 A and 1 output up to 40 A	≤ 28.5 V and ≤ 40 A	uncoated	CP-C.1-A-RU	1SVR360060R1001
		coated	CP-C.1-A-RU-C	1SVR360060R2001

Functions, application, operating mode

Functions



2CDC 271 001 F0017

1 INPUT 1, 2:

Terminals – input

2 Circuit diagram

3 OUTPUT +/-, +/–:

Terminals – output

Application

The redundancy unit CP-C.1-A-RU provides decoupling of two CP-C.1-A-RU power supply units. It provides automatic redundant power supply operation for critical applications. It has 2 inputs, each up to 20 A, and 1 output up to 40 A.

Operating mode

True redundancy with decoupling provided by the CP-C.1-A-RU

Redundant circuits are used to increase the operational reliability and eliminate power supply outages. Events that can cause a power supply failure include: incorrect wiring, blown fuses, or failure of a single power supply. If a fault event occurs (called initial fault) in the first power supply circuit, power to all loads is then supplied by the second (redundant) power supply. For this reason, both power supplies must be sized to handle the total current requirement of all loads. The primary and the redundant power supplies are decoupled from one another by the CP-C.1-A-RU unit.

It automatically switches from the primary to the redundant supply after a fault. It decouples the output of the failed power supply from the redundant supply preventing the initial fault from shorting or compromising the redundant supplies' output. In this way, uninterrupted supply of power to all loads is guaranteed. When available, the two power supplies should be connected to different input voltage phases, to avoid loss of power caused by a blown fuse on the primary side of the power supplies.

True redundancy, $I_{out} \leq I_r$

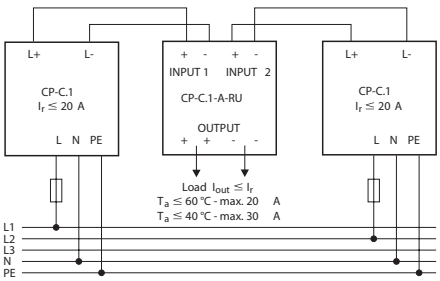

Parallel operation for increased power

Another operation mode of two power supplies in combination with a redundancy unit is to parallel and decouple them for increased power. The setup looks similar to the true redundant installation above but the field of application is different. Instead of redundancy the max. output current (limits see under the schematics) can be used to power up the loads. The redundancy module decouples both power supplies from each other to avoid that any electrical failure from one power supply circuit affects the other one. However, using the increased power also means there is no redundancy since if one supply fails the other one can not supply the load alone.

Increased power, $I_{out} \geq I_r$

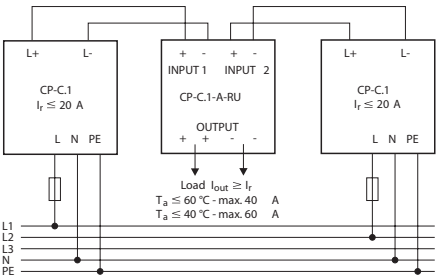

Installation

Mounting and demounting

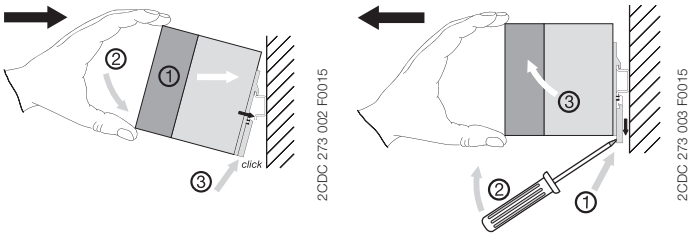

Mounting position and dimensions

The devices have to be mounted horizontally with the input terminals on the top.

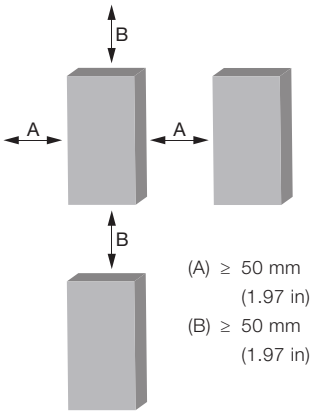

in **mm** [inches]

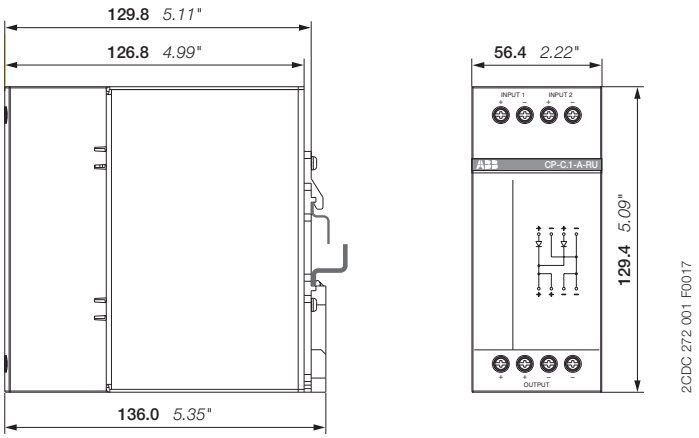

Electrical connection - Input side [INPUT 1 + - / INPUT 2 + -]

Connect the input terminals, stripping length of the cable – see technical data. For channel 1 left-hand input terminals + -, for channel 2 right-hand input terminals + -.

Electrical connection - Output side [OUTPUT + - + -]

Rate the lines for the maximum output current or provide a separate fuse protection. We recommend to choose the cable cross section as large as possible in order to minimize voltage drops. Observe the polarity.

Connection diagram

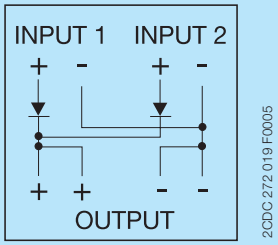

INPUT 1 +, -	Connection of the output of power supply unit 1
INPUT 2 +, -	Connection of the output of power supply unit 2
OUTPUT ++, --	Output for load

Safety instructions and warnings





In operation pay attention to:

- Do not modify the installation (primary and secondary side)! High current! Risk of electric arcs and electric shock (danger to life)!
- Risk of burns: Depending on the operation conditions the housing can become hot.
- The device contains no user serviceable parts. In any case of device malfunction please send the unit back to manufacturer.

The device must be installed by qualified persons only and in accordance with the specific national regulations (e. g. VDE, etc.).

The CP-C.1 is a chassis-mounted unit. It is maintenance-free and does not contain any integral setting elements and should therefore not be opened.

Before any installation, maintenance or modification work:

- Read the operating and installation instructions carefully and completely!
- Disconnect the system from the supply network and protect against switching on!



Before start of operation the following must be ensured:

- Connection to mains or DC supply according to the specific national regulations for class of protection I.
- Power supply cables and unit must be sufficiently fused. A disconnecting device has to be provided for the end product to disengage unit and supply cables from supply mains if required.
- The protective earth conductor must be connected to the terminal PE.
- Rate the output lines for the output current of the power supply and connect them with the correct polarity.
- In order to ensure sufficient convection the distance to the other devices has to be considered.

Attention! Improper installation/operation may impair safety of personnel and cause operational difficulties or destruction of the unit.

Attention! Danger to life!

Disconnect the system from the supply network before executing any works at the device and protect against switching on! The power supply contains components with high stored energy and circuits with high voltage! Do not introduce any objects into the unit and do not open the unit.

With some units of this range the output is capable of providing hazardous energy. Ensure that the service personnel is protected against inadvertent contact with parts carrying energy.

If the internal fuse is blown most probably the device is defect. In this case an examination of the device by the manufacturer is necessary.

Technical data

Type		CP-C.1-A-RU	CP-C.1-A-RU-C
Input circuit - Supply circuit		(+/+, -/-)	
Rated input voltage U_{in}		24 V DC	
Input voltage range per channel		10-28.5 V DC	
Rated input current I_{in} per channel		1-20 A	
Maximum input current per channel		30 A	
Transient overvoltage protection		yes	
Output circuit		(++/--)	
Rated output voltage U_{out}		24 V DC	
Voltage drop		typ. 0.6 V, max. 0.9 V	
Rated output current I_{out}		1-40 A	
Output ratings	$T_a \leq 60$ °C	10-28.5 V DC / 40 A	
	$T_a \leq 70$ °C	10-28.5 V DC / 30 A	
Derating	60 °C < $T_a \leq 70$ °C	2.5 % per Kelvin temperature increase	
Max. output current (Power reserve)		60 A	
Resistance to reverse feed		< 59 V	
General data			
Dimensions		see 'Dimensional drawings'	
Minimum distance to other units	horizontal / vertical	25 mm / 25 mm	
Degree of protection	housing / terminals	IP20 / IP20	
Material of housing	housing shell / cover	aluminium / zinc-coated sheet steel	
Protection class		III [1]	
Mounting		DIN rail (IEC/EN 60715)	
Mounting position		horizontal	
Electrical connection - Input circuit / Output circuit			
Connecting capacity	fine-strand with wire end ferrule	2.5-10 mm² (12-8 AWG)	
	fine-strand without wire end ferrule	2.5-10 mm² (12-8 AWG)	
	rigid	2.5-16 mm² (12-6 AWG)	
Stripping length		10 mm (0.39 in)	
Tightening torque		1.2 Nm	
Environmental data			
Ambient temperature range	operation	-25...+70 °C	-40...+70 °C
	rated load	-25...+60 °C (without derating)	
	storage	-40...+85 °C	
Damp heat (IEC/EN 60068-2-3)		95 %, without condensation	
Climatic category (IEC/EN 60721)		3K3	
Vibration (IEC/EN 60068-2-6)			
Shock (IEC/EN 60068-2-27)			
Coated PCBA		no	yes
Isolation data			
Insulation voltage	between input / output / housing	500 V AC (routine test)	
Pollution degree (EN 50178)		2	
Standards / Directives			
Standards		IEC/EN 61204, IEC/EN 60950-1	
EMC Directive		2014/30/EU	
Electromagnetic compatibility			
Interference immunity to		IEC/EN 61000-6-2	
electrostatic discharge	IEC/EN 61000-4-2	Level 3 (air discharge ±1.5 kV, contact discharge ±8 kV)	
radiated, radio-frequency, electromagnetic field	IEC/EN 61000-4-3	Level 3 (10 V/m)	
electrical fast transient / burst	IEC/EN 61000-4-4	Level 3 (±2 kV)	
surge	IEC/EN 61000-4-5	Level 1 (±0.5 kV)	
conducted disturbances, induced by radio-frequency fields	IEC/EN 61000-4-6	Level 3 (10 V)	
Interference emission		IEC/EN 61000-6-3	
high-frequency radiated	IEC/CISPR 22 / EN 55022	Class B	
high-frequency conducted	IEC/CISPR 22 / EN 55022	Class B	

[1] This device is designed for connection to a safety extra-low voltage source (SELV)

Further Documentation

Document title	Document type	Document number
Electronic Relays and Controls	Technical catalogue	2CDC 110 004 C02xx
Redundancy unit	Instruction manual	1SVC 360 560 M0000

You can find the documentation on the internet at www.abb.com/lowvoltage
-> Automation, control and protection -> Electronic Relays and Controls -> Power supplies.

CAD system files

You can find the CAD files for CAD systems at http://abb-control-products.partcommunity.com
-> Low Voltage Products & Systems -> Control Products -> Electronic Relays and Controls.

Contact us

ABB STOTZ-KONTAKT GmbH
P. O. Box 10 16 80
69006 Heidelberg, Germany
Phone: +49 (0) 6221 7 01-0
Fax: +49 (0) 6221 7 01-13 25
E-mail: info.desto@de.abb.com

You can find the address of your local sales organisation on the ABB home page
http://www.abb.com/contacts
-> Low Voltage Products and Systems

Note:
We reserve the right to make technical changes or modify the contents of this document without prior notice. With regard to purchase orders, the agreed particulars shall prevail. ABB AG does not accept any responsibility whatsoever for potential errors or possible lack of information in this document.

We reserve all rights in this document and in the subject matter and illustrations contained therein. Any reproduction, disclosure to third parties or utilization of its contents – in whole or in parts – is forbidden without prior written consent of ABB AG.

Copyright© 2017 ABB
All rights reserved

Document number 2CDC 114 103 D0201 (02/2017)