Your Expert Partner for **Human Machine Interfaces**

Actuator

Distribution by
Rs-online

02-
810.001

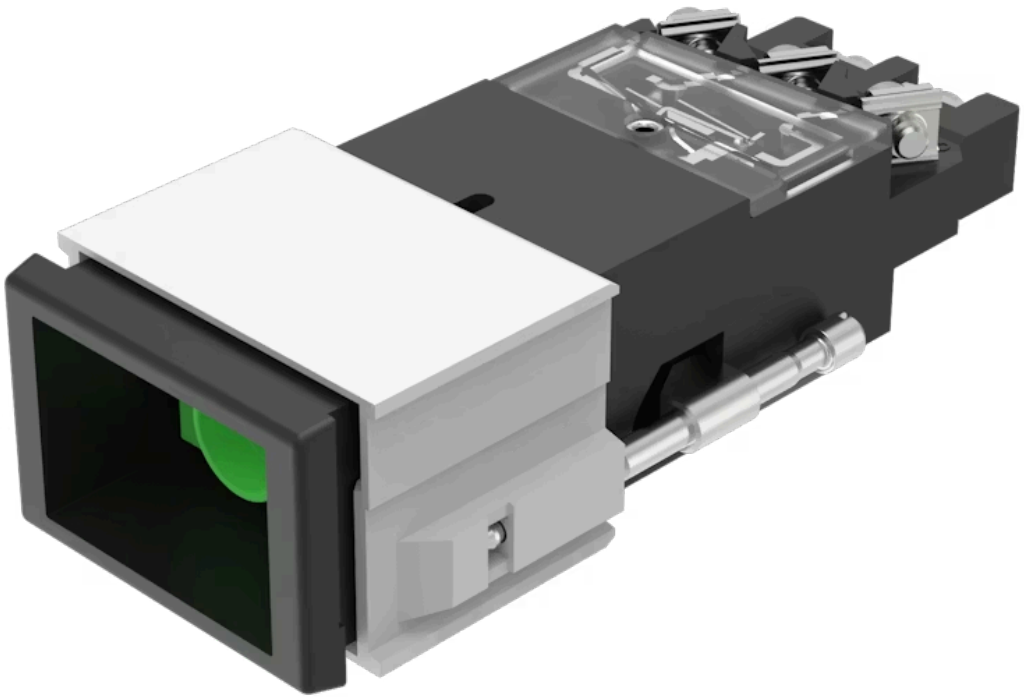

https://rs-online.eao.com/component/02-810.00...

Your product:



02-810.001
Actuator

PRODUCT RANGE

Product Status:	Not Recommended for new design

FRONT

Front form:	Rectangular

MOUNTING

Design:	Flush
Mounting cut-out:	21.2 mm x 29.2 mm
Mounting type:	Panel mounting

ELECTRICAL CHARACTERISTICS

Switching voltage and switching current:	10 VAC ... 55 VAC, 25 mA 10 VDC ... 75 VDC, 15 mA
Operating voltage:	10 - 55 V AC

MECHANICAL CHARACTERISTICS

Terminal:	Screw terminal
Tightening torque:	Fixing sleeve max. 0.2 Nm, Screw terminal 0.8 Nm
Weight:	0.059 kg

ACOUSTICAL CHARACTERISTICS

Tone frequency: ca. 2.8 kHz

Sound pressure: 85dB (A) ±8dB at a distance of 0.1m

AMBIENT CONDITION

IP Protection: IP40 front side, according to DIN EN 60529

Operating temperature: – 20 °C ... + 60 °C

Storage temperature: – 30 °C ... + 70 °C

CERTIFICATE

Conformities: CE, UKCA, 2011 / 65 / EC (RoHS), 2014 / 30 / EU (EMC)

REACH: REACH compliant

RoHS: RoHS compliant

OTHER

Short Description: Actuator, 21.2 mm x 29.2 mm, Rectangular, Screw terminal

Buzzer system: Electronic non-contacting buzzer with IC oscillator

Wiring diagrams:

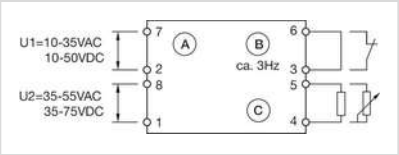

A = Power supply
B = Continuous tone (when open) / Intermittent tone (when closed)
C = Volume control

Mounting cut-outs:

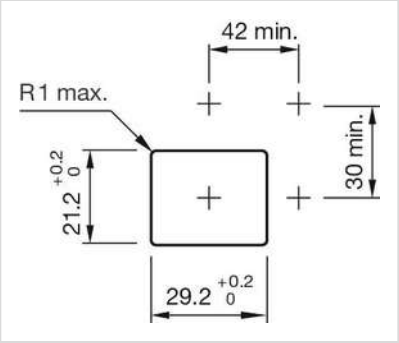

Dimension drawings:

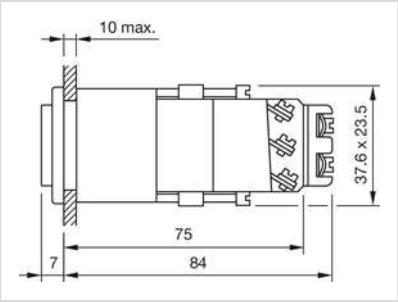
10 max.
37.6 x 23.5
75
7
84