NEW

KSC11 Series
Sealed Tact Switch for SMT

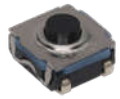

Features/Benefits

- *Hard actuator*
- *Long life*
- *Positive tactile feeling*
- *IP67 sealed*
- *SMT*

Typical Applications

- *Gaming/ Drones*
- *Industrial*
- *Medical*
- *High-end consumer*
- *Avionics*

Specification

FUNCTION: Normally open
CONTACT TYPE: SPST NO
TERMINALS: J bend for SMT
CONTACT MATERIAL: Silver plated

Environmental

OPERATING TEMPERATURE: -40°C to 85°C

Mechanical

Type	Force (N)	Life	Travel (mm)
KSC1101J LFS	1.60 ±0.4	3,000,000	0.20 ±0.1
KSC1131J LFS	3.20 ±0.6	2,000,000	0.25 ±0.15
KSC1151J LFS	5.00 ±1.0	1,000,000	0.40 ±0.15

Electrical

MAXIMUM POWER: 1 VA
MIN. / MAX. VOLTAGE: 0.02V / 32V
MIN. / MAX. CURRENT: 1 mA / 50 mA
DIELECTRIC STRENGTH: 250 Vrms
CONTACT RESISTANCE: ≤ 100 mΩ
INSULATION RESISTANCE: (100V): 1000 MΩ
BOUNCE TIME: ≤ 5 ms

Soldering

This component is suited to the following methods:
– Cleaning according to typical washing processes
– Lead free reflow soldering process in accordance with IEC 61760-1

Packaging

In reels of 1,700 pieces
Width of carrier tape: 16 mm
Dimensions of reels: 380 mm

How To Order

Our easy build-a-switch concept allows you to mix and match options to create the switch you need. To order, select desired option from each category and place it in the appropriate box.
For any part number different from those listed above, please consult your local representative.

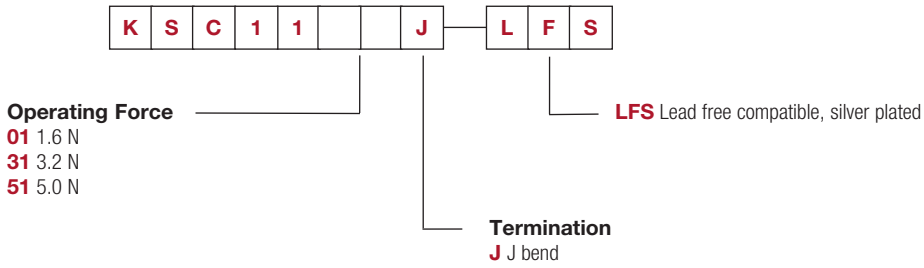

NEW

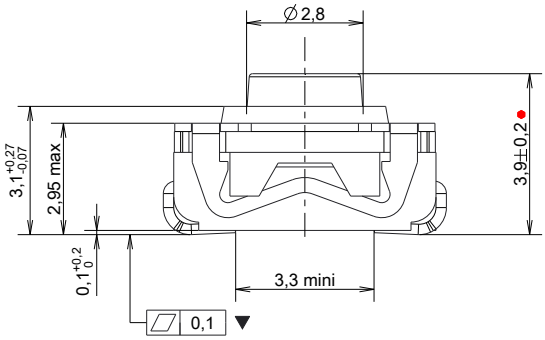

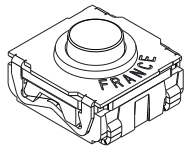

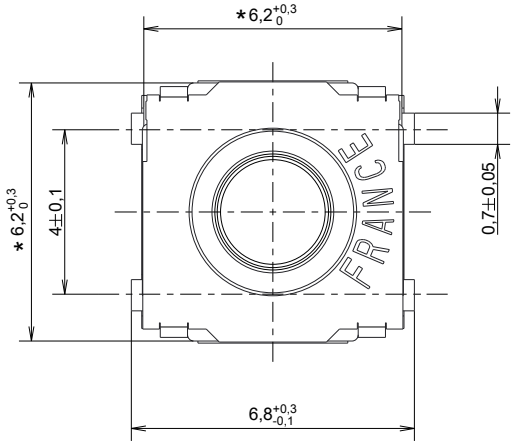

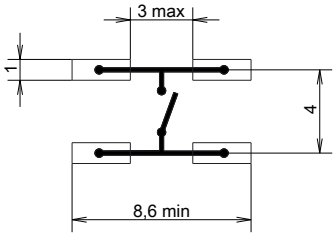

LAYOUT - PAD

First Angle Projection

Dimensions are shown: mm
Specifications and dimensions subject to change