

Wall socket



Flange socket



Coupler



Plug

Technical data

	Ex-plugs and receptacles acc. to IEC 60309-1/2 16A	
Marking accd. to 2014/34/EU	Wall socket, plug, coupler:	II 2G / Ex db eb [ia] IIC / IIB+H2 T6 II 2 D Ex IIIC / IIIB T80 Db
	Flange socket:	II 2G Ex db eb IIC / IIB+H2 Gb II 2 D Ex tb IIIC Db
EC-Type Examination Certificate	Wall socket, plug, coupler:	BVS 17 ATEX E 053 X
	Flange socket:	BVS 15 ATEX E 101 U
IECEx Certificate of Conformity	Wall socket, plug, coupler:	IECEX BVS 17.0045X
	Flange socket:	IECEX BVS 15.0088U
EAC (TR)	1EX D E [IA] IIC/IIB T6 GB X EX TB IIIC T80°C DB X	
Permissible ambient temperature	-55 °C to + 55 °C	
Rated voltage	up to 415 V, (3-pole) / 690 V, (4-pole) / 690 V, (5-pole) AC	
Rated current	16 A	
Frequency	up to 400 Hz	
Rated making / Rated breaking capacity AC-3 accd. EN 60947-3	Ue 250 V / Ie 16 A (3-pole) Ue 690 V / Ie 16 A (4-pole) Ue 500 V / Ie 16 A (5-pole)	
External back-up fuse, max.	without therm. protection: 16 A with therm. protection: 35 A gG (rated current 16 A set to)	
Protection class	I	
Degree of protection accd. to EN 60529	IP66	
Enclosure colour	black	

	Wall socket
Cable entry	1 x M25 cable gland, 1 x M25 plastic Ex-screw plug or 2 x metal thread M20 with plastic Ex-screw plug
Connecting terminals	2 x 1.5 – 4.0 mm²
Enclosure material	Glass-fibre reinforced polyester
	Plug
Cable entry	Ø 8 – 18 mm (3-pole) / Ø 8 – 21 mm (4-pole) / 12 – 21 mm (5-pole)
Connecting terminals	1 x 1.0 – 4.0 mm²
Enclosure material	Polyamide
	Coupler
Cable entry	Ø 8 – 19 mm (3-pole) / Ø 8 – 21 mm (4-pole) / 12 – 21 mm (5-pole)
Connecting terminals	1 x 1.5 – 4.0 mm²
Enclosure material	Polyamide
	Flange socket
Connecting terminals	2 x 1.5 – 4.0 mm²
Enclosure material	Polyamide

Plug install protected against higher mechanical risk 4J under-40°C.

Details for used cable glands see pages 2.3.ff



Plug



Coupler



Flange socket



Wall socket

Ordering details

Voltage	h	Type	Aux. contact	Cable entry	Weight	Extended temp IIB+H2 -55 °C up to +45 °C (16 A) IIC -20 °C up to +55 °C (10 A)	Standard temp IIC -20 °C up to +55 °C (16 A)	Order No.
Type 16A 3pol								
110-130V	 4 h	Wall socket	-	KU	1.2 kg		X	GHG5114304R0001
		Wall socket	-	GE	1.2 kg		X	GHG5114304R0002
		Wall socket	-	GE	1.2 kg	X		GHG5114304R0102
		Wall socket	-	ME	1.3 kg		X	GHG5114304R3001
		Wall socket	-	ME	1.3 kg	X		GHG5114304R3101
		Wall socket	-	GM	1.3 kg		X	GHG5114304R3003
		Wall socket	-	GM	1.3 kg	X		GHG5114304R3103
		Flange socket	-		0.4 kg		X	GHG5118304R0001
		Flange socket	-		0.4 kg	X		GHG5118304R0101
		Coupler	-		0.7 kg		X	GHG5113304R0001
		Plug			0.35 kg	X	X	GHG5117304R0001
Type 16A 3pol								
200-250 V	 6 h	Wall socket	-	KU	1.2 kg		X	GHG5114306R0001
		Wall socket	-	GE	1.2 kg		X	GHG5114306R0002
		Wall socket	-	GE	1.2 kg	X		GHG5114306R0102
		Wall socket	-	ME	1.3 kg		X	GHG5114306R3001
		Wall socket	-	ME	1.3 kg	X		GHG5114306R3101
		Wall socket	-	GM	1.3 kg		X	GHG5114306R3003
		Wall socket	-	GM	1.3 kg	X		GHG5114306R3103
		Flange socket	-		0.4 kg		X	GHG5118306R0001
		Flange socket	-		0.4 kg	X		GHG5118306R0101
		Coupler	-		0.7 kg		X	GHG5113306R0001
		Plug			0.35 kg	X	X	GHG5117306R0001
Type 16 A 4-pole								
200-250 V	 9 h	Wall socket	-	KU	1.2 kg		X	GHG5114409R0001
		Wall socket	-	ME	1.3 kg		X	GHG5114409R3001
		Wall socket	-	ME	1.3 kg	X		GHG5114409R3101
		Wall socket	-	GM	1.3 kg		X	GHG5114409R3003
		Wall socket	-	GM	1.3 kg	X		GHG5114409R3103
		Flange socket	-		1.0 kg		X	GHG5118409R0001
		Flange socket	-		1.0 kg	X		GHG5118409R0101
		Coupler	-		1.7 kg		X	GHG5113409R0001
		Plug			0.35 kg	X	X	GHG5117409R0001
380-415V	 6 h	Wall socket	-	KU	1.2 kg		X	GHG5114406R0001
		Wall socket	-	ME	1.3 kg		X	GHG5114406R3001
		Wall socket	-	ME	1.3 kg	X		GHG5114406R3101
		Wall socket	-	GM	1.3 kg		X	GHG5114406R3003
		Wall socket	-	GM	1.3 kg	X		GHG5114406R3103
		Flange socket	-		1.0 kg		X	GHG5118406R0001
		Flange socket	-		1.0 kg	X		GHG5118406R0101
		Coupler	-		1.7 kg		X	GHG5113406R0001
		Plug			0.35 kg	X	X	GHG5117406R0001



Wall socket



Flange socket



Coupler



Plug

Ordering details

Voltage	h	Type	Aux. contact	Cable entry	Weight	Extended temp IIB+H2 -55 °C up to +45 °C (16 A) IIC -20 °C up to +55 °C (10 A)	Standard temp IIC -20 °C up to +55 °C (16 A)	Order No.
Type 16A 4pol								
480-500V	 7 h	Wall socket	-	KU	1.2 kg		X	GHG5114407R0001
		Wall socket	-	ME	1.3 kg		X	GHG5114407R3001
		Wall socket	-	ME	1.3 kg	X		GHG5114407R3101
		Flange socket	-		1.0 kg		X	GHG5118407R0001
		Flange socket	-		1.0 kg	X		GHG5118407R0101
		Coupler	-		1.7 kg		X	GHG5113407R0001
		Plug			0.35 kg	X	X	GHG5117407R0001
600-690V	 5 h	Wall socket	-	KU	1.4 kg		X	GHG5114405R0001
		Wall socket	-	ME	1.5 kg		X	GHG5114405R3001
		Wall socket	-	ME	1.5 kg	X		GHG5114405R3101
		Flange socket	-		1.0 kg		X	GHG5118405R0001
		Flange socket	-		1.0 kg	X		GHG5118405R0101
		Coupler	-		1.7 kg		X	GHG5113405R0001
		Plug			0.35 kg	X	X	GHG5117405R0001
Type 16A 5pol								
200-250V 380-415V	 6 h	Wall socket	-	KU	1.2 kg		X	GHG5114506R0001
		Wall socket	-	ME	1.3 kg		X	GHG5114506R3001
		Wall socket	-	ME	1.3 kg	X		GHG5114506R3101
		Wall socket	-	GM	1.3 kg		X	GHG5114506R3003
		Wall socket	-	GM	1.3 kg	X		GHG5114506R3103
		Flange socket	-		1.0 kg		X	GHG5118506R0001
		Flange socket	-		1.0 kg	X		GHG5118506R0101
		Coupler	-		1.7 kg		X	GHG5113506R0001
		Plug			0.35 kg	X	X	GHG5117506R0001

Other voltage ranges and versions available on request

KU = 1 x plastic cable glands M25, 1 x M25 plastic Ex-screw plug

ME = 2 x metal thread M20

GM = 2 x metal thread M20 with screw plug, with external earth bolt M6

GE = 2x plastic thread M20 without gland/screw plug



Wall socket



Plug

Dimension drawing / wiring diagram

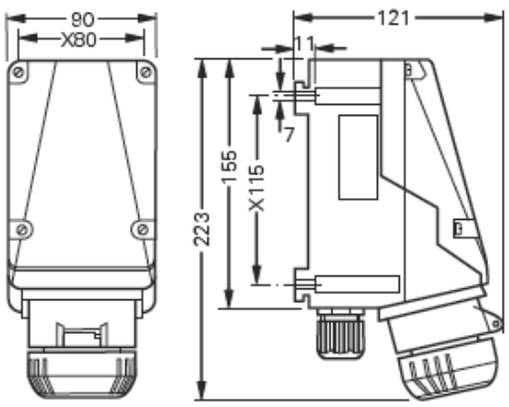

Wall socket 3-pole

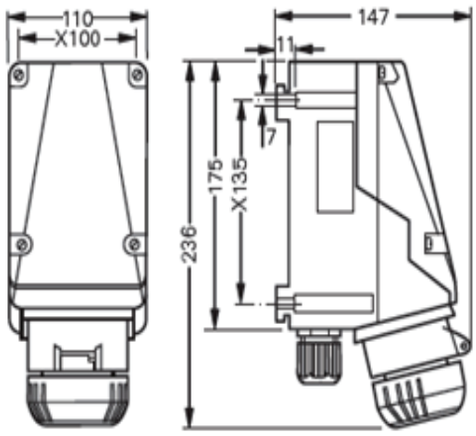

Wall socket 4/5-pole

Wall socket 4/5-pole

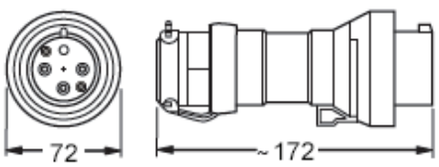

Plug 3-pole

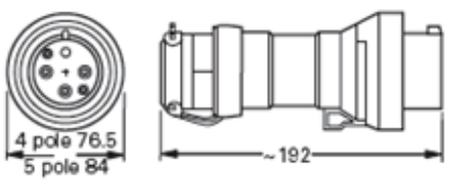

Plug 4/5-pole

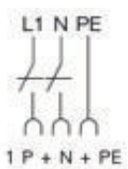













Flange socket



Coupler

Coupler 3-pole

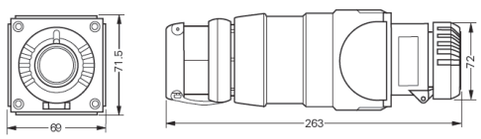

Coupler 4/5-pole

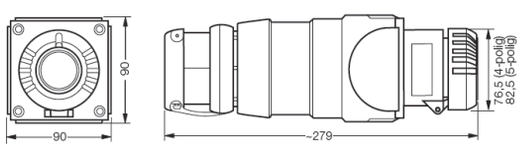

Flange socket 3-pole

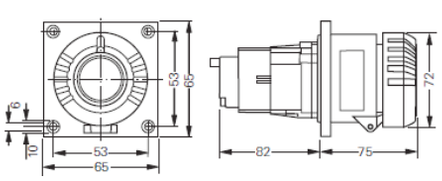

Flange socket 4/5-pole

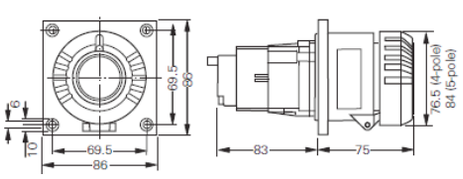

Assembly dimension

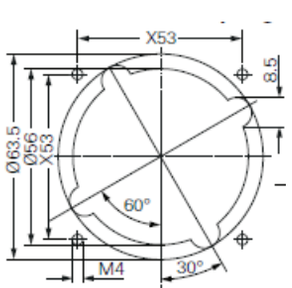

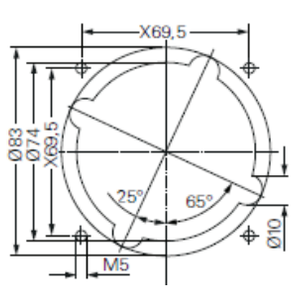

X= fixing dimensions



Angle adapter



Protective canopy



Plug cap



GHG 610 1901 R0126

Accessories

Type	Application	Fixing method	Order No.
Mounting plates for wall sockets 16 A			
Size 4	for wall mounting	snap on	**GHG 610 1953 R0126**
Size 4	for trellis mounting	snap on	**GHG 610 1953 R0126**
Size 4	for pipe clamp	snap on	**GHG 610 1953 R0130**

Type	Order No.
Plug cap for plugs 16 A	
Plug 16 A 3-pole	**GHG 510 1901 R0001**
Plug 16 A 4-pole	**GHG 510 1901 R0002**
Plug 16 A 5-pole	**GHG 510 1901 R0003**

Type	OU	Order No.
Accessories for mounting plates		
Mounting set for pipes 1" (Ø 27 - 30 mm) for mounting plates with pipe fixing	10	**GHG 610 1953 R0020**

Please pay attention that only order units (OU) according to the ordering details can be delivered.

Type	Application	Order No.
Protective canopy for mounting plate		
Size 4	for mounting plate size 4, snap on	**GHG 610 1955 R0107**

Type	Application	Fixing method	Order No..
Angle adapter for Wall socket 16 A			
16 A 3-pol	Panel mounting	screwr	**GHG 510 1921 R0001**
16/32 A 4/5-pol	Panel mounting	screw	**GHG 510 1921 R0002**

Dimension drawing

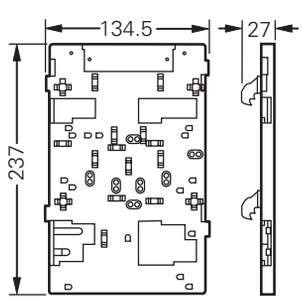

Mounting plate size 4
for wall/trellis mounting

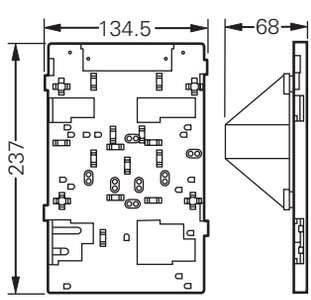

Mounting plate size 4
for pipe clamp

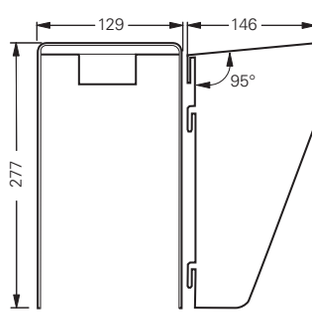

Protective canopy size 4

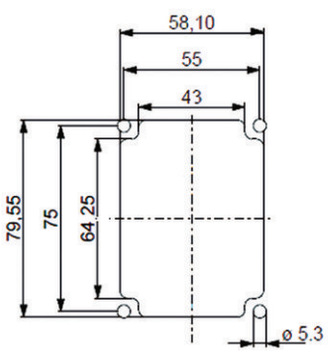

Angle adapter 16A 3-pol.

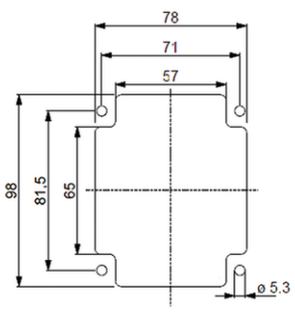

Angle adapter 16/32 A 4/5-pol.

Dimensions in mm