Brand of NTN corporation

Technical data

ESFTE206

Bearing units



Grey cast housing, radial insert ball bearing with eccentric locking collar, single lip seal

KIT CONTENT

ES206G2, FTE206

VISUAL (S)

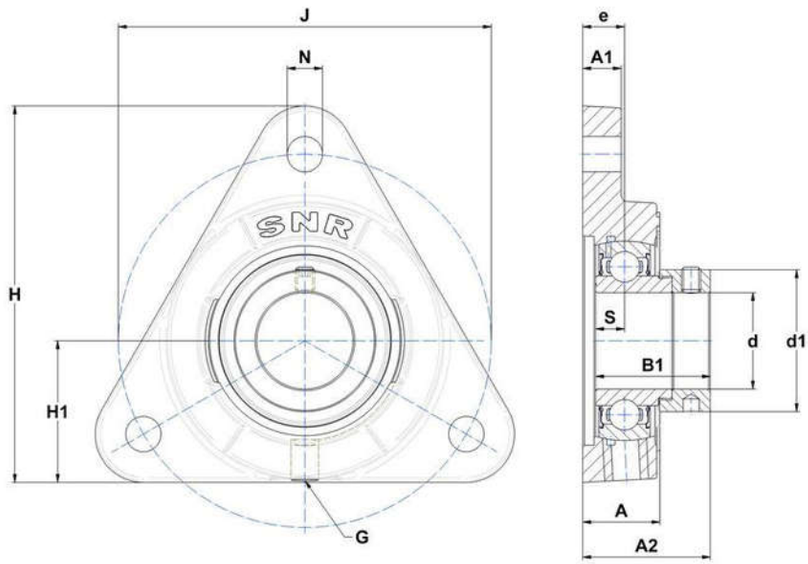

PRODUCT DEFINITION

Brand	SNR
A - Housing height	24 mm
A1 - Housing foot height / flange height	12 mm
A2 - Total height from mounting surface	39,7 mm
B - Width of Inner Ring	23,8 mm
B1 - Overall width Inner Ring	35,7 mm

ESFTE206
Bearing units

PRODUCT DEFINITION	
d - Shaft diameter	30 mm
d1 - Outer dia of eccent. Lock. collar / nut of adapter sleeve	44,1 mm
e - Distance mounting surface to bearing center	13 mm
G - Grease fitting	R1/8"
H - Housing length, width or diameter	117 mm
H1 - Distance housing side to centre of bearing insert	44 mm
J - Mounting holes distance	116 mm
N - Mounting hole dimension	11 mm
S - Distance front side/bearing centre	9 mm

PRODUCT PERFORMANCE	
C - Dynamic load rating	19500000 mN
C0 - Static load rating	11200000 mN
Operating temperature min.	253,15 °K
Operating temperature max.	373,15 °K

OTHER FEATURES	
Mass	1,13 kg
Recommended tightening torque for set screw	11.5 N-m