ID0049

Inductive sensor

IDC2050BABOA/SL/LS100-FK

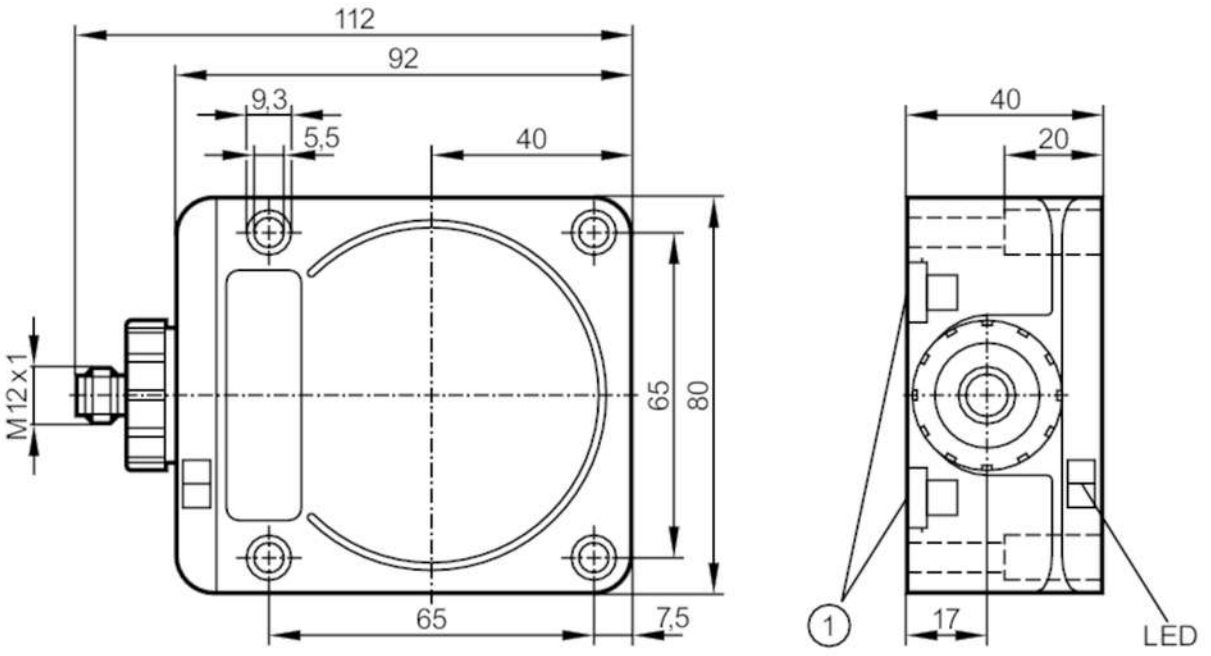

1 mounting on DIN rail

Product characteristics		
Output function		normally open
Sensing range	[mm]	50
Housing		rectangular
Dimensions	[mm]	92 x 80 x 40
Electrical data		
Operating voltage	[V]	20...250 AC/DC
Protection class		I
Reverse polarity protection		no
Outputs		
Output function		normally open
Max. voltage drop switching output DC	[V]	6
Max. voltage drop switching output AC	[V]	6.5
Minimum load current	[mA]	5
Max. leakage current	[mA]	0.8
Permanent current rating of switching output AC	[mA]	250; (350 (...50 °C))
Permanent current rating of switching output DC	[mA]	100
Short-time current rating of switching output	[mA]	2200; (20 ms / 0,5 Hz)
Switching frequency AC	[Hz]	25
Switching frequency DC	[Hz]	25
Short-circuit proof		no

ID0049

Inductive sensor

IDC2050BABOA/SL/LS100-FK

Overload protection		no	
Detection zone			
Sensing range	[mm]	50	
Operating distance	[mm]	0...40.5; (mounted flush with mild steel (ST37))	
Accuracy / deviations			
Correction factor		steel: 1 / stainless steel: 0.85 / brass: 0.48 / aluminium: 0.46 / copper: 0.38	
Hysteresis	[% of Sr]	3...20	
Switch point drift	[% of Sr]	-15...15	
Operating conditions			
Ambient temperature	[°C]	-25...70	
Protection		IP 67	
Tests / approvals			
EMC		EN 60947-5-2	
		EN 55011	class B
MTTF	[years]	596	
Mechanical data			
Weight	[g]	423.5	
Housing		rectangular	
Mounting		flush mountable	
Type of mounting		rail; (TH35 (EN 60715))	
Dimensions	[mm]	92 x 80 x 40	
Materials		PPE modified	
Displays / operating elements			
Display		switching status	1 x LED, yellow
Electrical connection			
Required protection		miniature fuse to IEC60127-2 sheet 1; ≤ 2 A; fast acting	
Accessories			
Items supplied		sealing plug: 1	
Remarks			
Remarks		Recommendation: Check the safe functioning of the unit after a short circuit.	
Pack quantity		1 pcs.	

ID0049

Inductive sensor

IDC2050BABOA/SL/LS100-FK

Electrical connection - plug

Connector: 1 x M12; coding: C

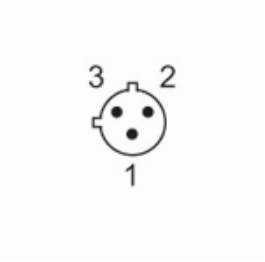

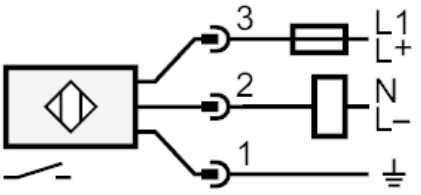

Note miniature fuse to IEC60127-2 sheet 1 ≤ 2 A fast acting