SAMPLE COOLERS
SC32 – SC132



DESCRIPTION

ADCA sample coolers are specially designed to cool samples of boiler water or steam for analysis.
Sample coolers prevent steam flashing-off from hot pressurised liquid samples, which can be dangerous and will result in an incorrect water sample.
This device may be used for boiler water analysis and other sampling or cooling applications compatible with construction materials.

MAIN FEATURES

Corrosion-resistant body and internals.
Self draining sample (inlet top, outlet bottom).

OPTIONS:
Sample inlet valve.
Cooling water inlet valve.
Temperature indicator
Bolted top plate.
Different connection sizes and materials under request against extra price.
Double coil high pressure design for larger capacities

USE:
Steam boilers and hot water systems.

AVAILABLE MODELS:
SC32/SS - SC132/SS - stainless steel body and coil.

SIZES AND CONNECTIONS :
SC32 – SC132
Cooling water inlet/outlet : 1/2" on body (BSP or NPT)
Sample tube inlet/outlet : 8 mm O/D

INSTALLATION:
Vertical installation.

OPERATION:
Cooling water must be in its maximum flow before open or close the sample inlet valve, in order to avoid the risk of scalding.
The sample valve must also be closed before the cooling water valve.

PERFORMANCE:
30 to 60 kg/hr of sample water at ≈ 30ºC with 1m3/h -15ºC inlet cooling water (boilers up to 20 bar-220ºC), for other pressures, temperatures and /or certified figures please consult.

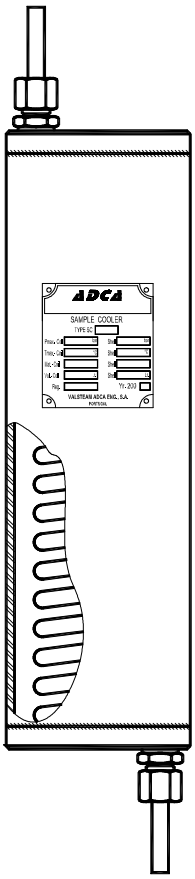

LIMITING CONDITIONS				
	BODY		COIL	
Model	Pressure bar	Related Temp. ºC	Pressure bar	Related Temp. ºC
SC32 - SC132	20	120	110	400
			90	450

Minimum operating temperature : -10ºC
Design code : AD - Merkblatt

We reserve the right to change the design and material of this product without notice.

DIMENSIONS (mm)						
MODEL	**A**	**B**	**C**	**D**	**E**	**WGT Kg**
SC 32	90	420	300	26	30	3,9
SC 132	90	520	400	26	30	4,8

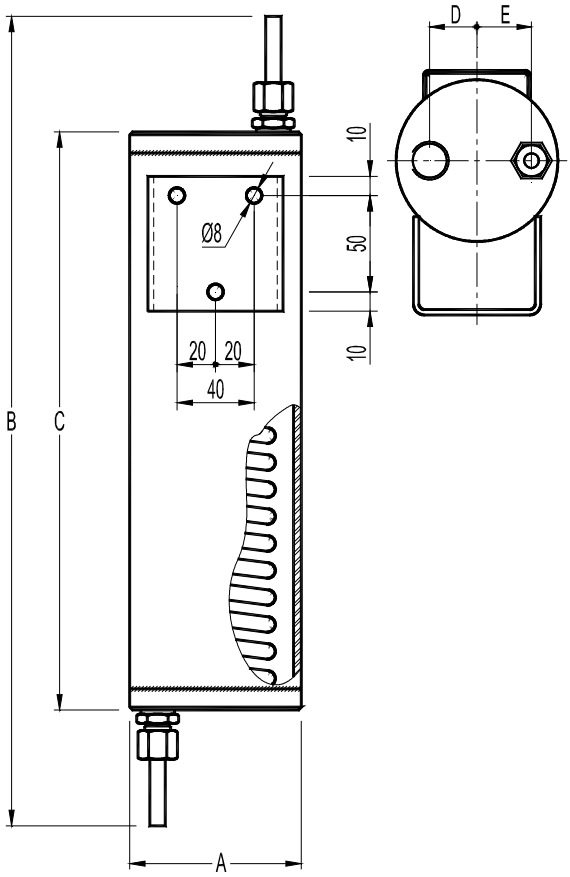

MATERIALS	
DESIGNATION	**MATERIAL**
	SC32 - SC132
Body	AISI 304 / 1.4301
Covers	AISI 304 / 1.4301
Coil	AISI 316L / 1.4404
Compression fittings *	Fe / Zn 12 - ISO 2081 - Cl. L
Discharge tube	ASI 316L / 1.4404
Thermometer connector	AISI 316 / 1.4401

EN10204 3.1 certificate available if requested with the order.
* Stainless steel available against extra price

TYPICAL INSTALLATION

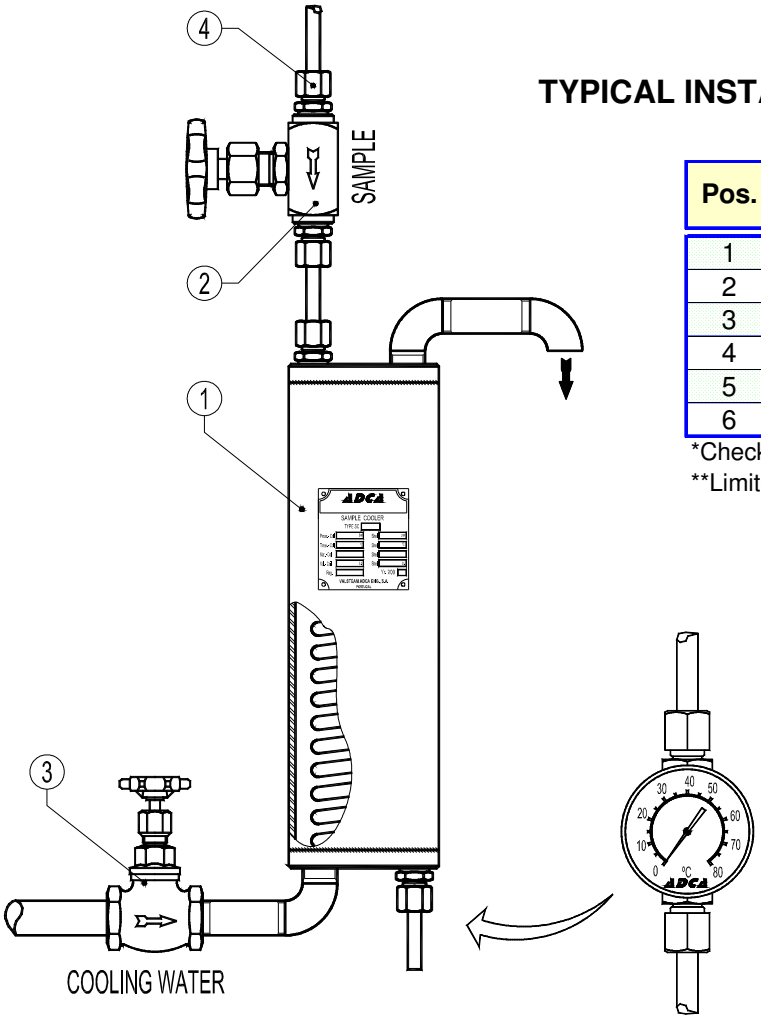

Pos.	Designation
1	Sample Cooler
2	* Sample inlet valve NV-400
3	Cooling water inlet valve ADCA GV32B
4	Comp. fitting DN1/4"x 8 (2) Cl. S (316Ti / 1.4571)
5	Thermometer connector
6	Bimetal thermometer

*Check operating conditions, see catalogue
**Limited to max. 400 ºC

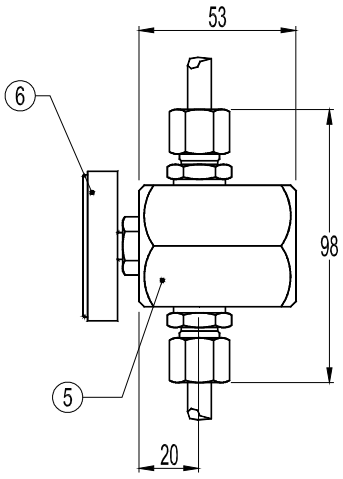

We reserve the right to change the design and material of this product without notice.