# 5.05.525.145/0000

# TILTED DIAMOND+ support tube, black, L 400 mm



## description

The holder tubes in various lengths and shapes, together with the mounting base, enable diverse mounting options for the TILTED DIAMOND+ variants. The mounting tubes are also used for the KIS.LIGHT and the TILTED DIAMOND+ IO-LINK. This allows the signal lights to be mounted easily and clearly even in remote or out-of-the-way locations.

The mounting tubes are connected to the mounting base by a threaded pin. The material is black coated steel. The holder tubes and the mounting base have environmental resistance, which is certified according to IEC 60068-2.

## technical data

| | |
|---|---|
| **› general** | |
| Color | black |
| Packaging unit | 1 pcs. |
| net weight | 485 g |
| Environment resistance | IEC 60068-2-27<br>IEC 60068-2-64 |
| MOQ order | 1 pcs. |
| RoHS compliant | Yes |
| REACH compliant | Yes |
| Component material | Metall |
| **› mounting diameters** | |
| Outside dimension, length | 400 mm |
| Outside dimension, width | 46 mm |
| **› mechanical data** | |
| Fixing | Screw |

**direct links**

› RAFI eCatalog

The information in this data sheet only contains general descriptions and / or performance features, which may not apply precisely as described to the respective application, and which my change due to further product enhancements. The technical data, illustrations and other information about our products are the mere results of individual technical testing. These descriptions and other product features are only binding if they expressly agreed upon at the time of the conclusion of a binding contract. In all other cases, we reserve the right to make technical changes as well as changes of availability. Pictures and other graphic illustrations are approximations only. All product names may be trademarks or brand names of the RAFI Group or any other sub-supplier of RAFI. The use of such by any third parties for their own purposes may infringe the rights of the respective entity holding those rights.


**RAFI GmbH & Co. KG**

Ravensburger Str. 128-134
88276 Berg / Ravensburg
Germany
www.rafi-group.com,
info.headquarters@rafi-group.com

## drawings

### Dimensioned drawing

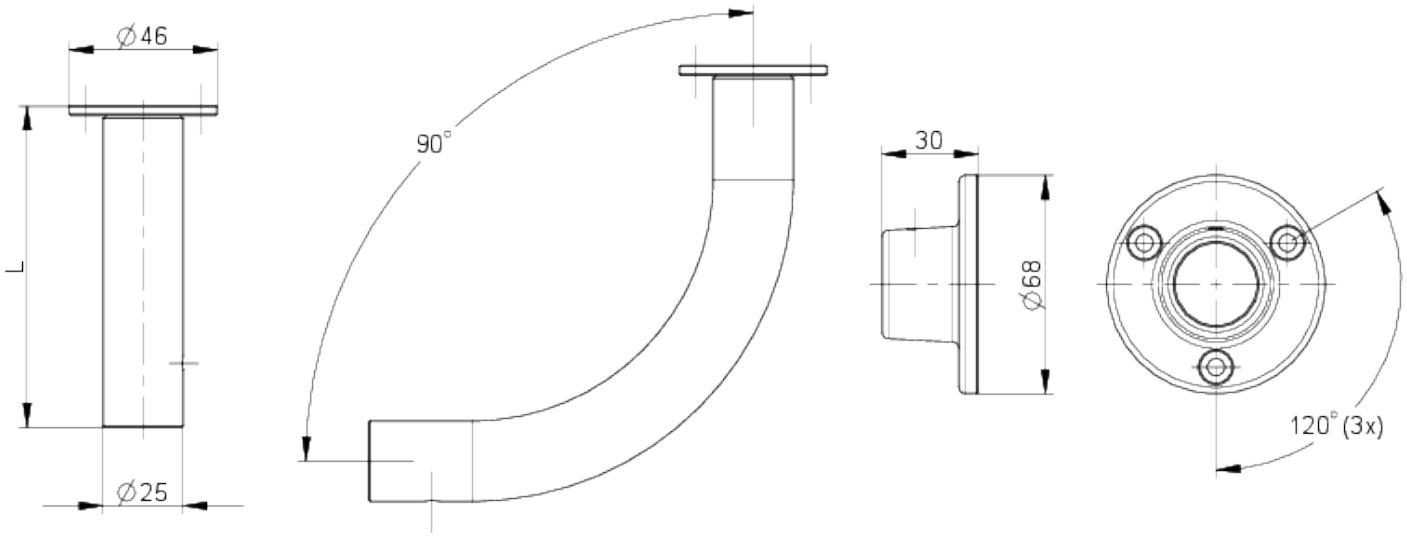


### System drawing

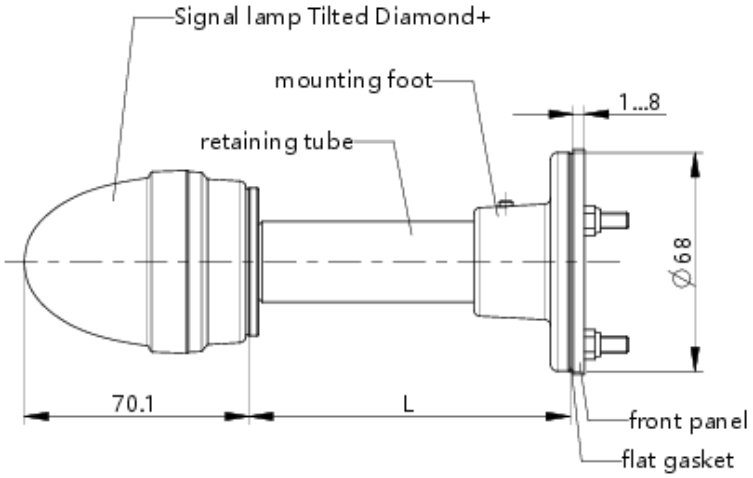


The information in this data sheet only contains general descriptions and / or performance features, which may not apply precisely as described to the respective application, and which my change due to further product enhancements. The technical data, illustrations and other information about our products are the mere results of individual technical testing. These descriptions and other product features are only binding if they expressly agreed upon at the time of the conclusion of a binding contract. In all other cases, we reserve the right to make technical changes as well as changes of availability. Pictures and other graphic illustrations are approximations only. All product names may be trademarks or brand names of the RAFI Group or any other sub-supplier of RAFI. The use of such by any third parties for their own purposes may infringe the rights of the respective entity holding those rights.


**RAFI GmbH & Co. KG**

Ravensburger Str. 128-134
88276 Berg / Ravensburg
Germany
www.rafi-group.com,
info.headquarters@rafi-group.com