IF509A

Inductive full-metal sensor

IFB3004BBPKG/AM/US-104/3G/3D

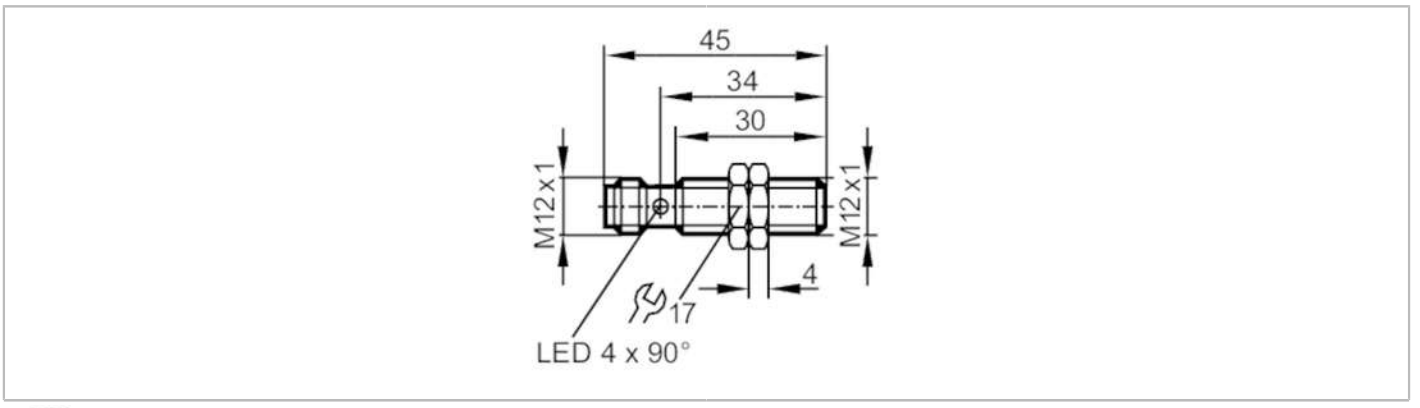

Product characteristics		
Electrical design		PNP
Output function		normally open
Sensing range	[mm]	4
Housing		threaded type
Dimensions	[mm]	M12 x 1 / L = 45
Application		
Special feature		Gold-plated contacts; Increased sensing range; Full-metal housing
Pressure rating	[bar]	100
Note on pressure rating		sensing face
Electrical data		
Operating voltage	[V]	10...30 DC
Current consumption	[mA]	< 10
Protection class		III
Reverse polarity protection		yes
Outputs		
Electrical design		PNP
Output function		normally open
Max. voltage drop switching output DC	[V]	2.5
Permanent current rating of switching output DC	[mA]	100
Switching frequency DC	[Hz]	100
Short-circuit protection		yes
Overload protection		yes
Detection zone		
Sensing range	[mm]	4
Real sensing range Sr	[mm]	4 ± 10 %
Operating distance	[mm]	0...3.24
Increased sensing range		yes
Accuracy / deviations		
Correction factor		steel: 1 / stainless steel: 0.7 / brass: 0.6 / aluminium: 0.5 / copper: 0.2

IF509A

Inductive full-metal sensor

IFB3004BBPKG/AM/US-104/3G/3D

Hysteresis	[% of Sr]	1...15	
Operating conditions			
Ambient temperature	[°C]	0...60	
Note on ambient temperature		when used outside the hazardous area: 0...100°C	
Protection		IP 67; (when used outside the hazardous area: IP 65, IP 66, IP 67, IP 68, IP 69K)	
Tests / approvals			
ATEX marking		Ex II 3D Ex tc IIIC T85° C Dc X	
		Ex II 3G Ex nA IIC T6 Gc X	
EMC		EN 61000-4-2 ESD	4 kV CD / 8 kV AD
		EN 61000-4-3 HF radiated	10 V/m
		EN 61000-4-4 Burst	2 kV
		EN 61000-4-6 HF conducted	10 V
		EN 55011 emission	class B
MTTF	[years]	1217	
Mechanical data			
Weight	[g]	43.8	
Housing		threaded type	
Mounting		flush mountable	
Dimensions	[mm]	M12 x 1 / L = 45	
Thread designation		M12 x 1	
Materials		stainless steel (1.4404 / 316L); sensing face: stainless steel (1.4404 / 316L); LED window: PEI; lock nuts: stainless steel (1.4404 / 316L)	
Tightening torque	[Nm]	25	
Full-metal housing		yes	
Displays / operating elements			
Display		switching status	4 x LED, yellow
Accessories			
Items supplied		lock nuts: 2	
Remarks			
Pack quantity		1 pcs.	
Electrical connection			

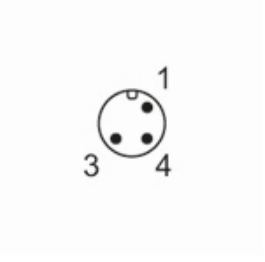

IF509A

Inductive full-metal sensor

IFB3004BBPKG/AM/US-104/3G/3D

Connection

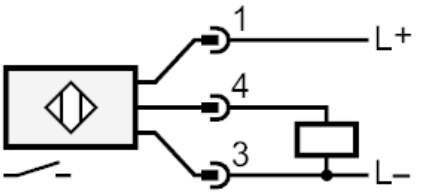

Electrical connection - plug

Connector: 1 x M12; Contacts: gold-plated