MINI-BEAM Expert Series

Quick Start Guide

Microprocessor-Based TEACH Mode Photoelectric Sensors

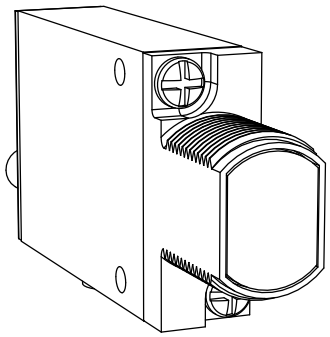

U.S. patent(s) issued or pending

This guide is designed to help you set up and install the MINI-BEAM® Expert™. For complete information on programming, performance, troubleshooting, dimensions, and accessories, please refer to the Instruction Manual at *www.bannerengineering.com*. Search for p/n 55214 to view the Instruction Manual. Use of this document assumes familiarity with pertinent industry standards and practices.

WARNING: Not To Be Used for Personnel Protection

Never use this device as a sensing device for personnel protection. Doing so could lead to serious injury or death. This device does not include the self-checking redundant circuitry necessary to allow its use in personnel safety applications. A sensor failure or malfunction can cause either an energized or de-energized sensor output condition.

Models

Retroreflective Models

Model[1]	Sensing Mode	Range or Focus[2]	Supply Voltage	Output Type
SME312LV	Retroreflective, Visible red, 650 nm	5 m (15 ft)	10 V dc to 30 V dc	Bipolar NPN/PNP
SME312LP	Polarized retroreflective, Visible red, 650 nm	10 mm to 3 m (0.4 in to 10 ft)		
SME312LPC	Polarized retroreflective, Visible red, 650 nm (clear object)	1 m (3.3 ft) with supplied reflector		

Diffuse Models

Model[1]	Sensing Mode	Range or Focus	Supply Voltage	Output Type
SME312D	Diffuse, Infrared, 880 nm	380 mm (15 in)	10 V dc to 30 V dc	Bipolar NPN/PNP
SME312DV	Diffuse, Visible red, 650 nm	1100 mm (43 in)		
SME312W	Divergent Diffuse, Infrared, 880 nm	130 mm (5 in)		

Convergent Models

Model[1]	Sensing Mode	Range or Focus	Spot Size at Focus	Supply Voltage	Output Type
SME312CV	Convergent, Visible red, 650 nm	16 mm (0.65 in)	1.3 mm (0.05 in)	10 V dc to 30 V dc	Bipolar NPN/PNP
SME312CV2	Convergent, Visible red, 650 nm	43 mm (1.7 in)	3.0 mm (0.12 in)		
SME312CVG	Convergent, Visible green, 525 nm	16 mm (0.65 in)	1.0 mm (0.04 in)		
SME312CVB	Convergent, Visible blue, 475 nm	16 mm (0.65 in)	1.8 mm (0.07 in)		
SME312CVW	Convergent, Visible white, 450–650 nm				

1 Standard 2 m (6.5 ft) cable models are listed. To order the 9 m (30 ft) cable model, add suffix "W/30" to the model number (for example, SME312LV W/30.) To order the 5-pin Euro-style QD models, add suffix "QD" (for example, SME312LVQD). Models with a QD connector require a mating cable.

2 Sensing ranges vary according to the efficiency and reflective area of the retroreflector(s) used. (Retroreflective tape is not recommended for use with Clear Object Detection models.) See *Accessories* and the Banner Engineering catalog for more information.

Glass Fiber Optic Models

Model[1]	Sensing Mode	Range or Focus	Supply Voltage	Output Type
SME312F	Glass Fiber Optic, 880 nm infrared	Range varies by sensing mode and fiber optics used	10 V dc to 30 V dc	Bipolar NPN/PNP
SME312FV	Glass Fiber Optic, Visible red, 650 nm			
SME312FVG	Glass Fiber Optic, Visible green, 525 nm			
SME312FVB	Glass Fiber Optic, Visible blue, 475 nm			
SME312FVW	Glass Fiber Optic, Visible white, 450–650 nm			

Plastic Fiber Optic Models

Model[1]	Sensing Mode	Range or Focus	Supply Voltage	Output Type
SME312FP	Plastic Fiber Optic, Visible red, 650 nm	Range varies by sensing mode and fiber optics used	10 V dc to 30 V dc	Bipolar NPN/PNP
SME312FPG	Plastic Fiber Optic, Visible green, 525 nm			
SME312FPB	Plastic Fiber Optic, Visible blue, 475 nm			
SME312FPW	Plastic Fiber Optic, Visible white, 450–650 nm			

Overview

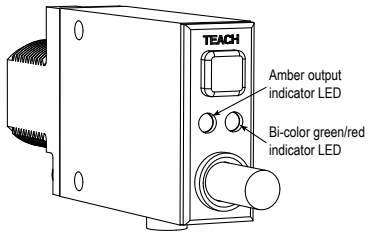

MINI-BEAM® Expert™ is a complete family of sensors, all housed in the popular, robust and compact rectangular housing. Their large push button and easy-to-see indicators provide easy configuration, alignment, and monitoring during use.

Status Indicators

Normal sensor operation is called RUN mode. Sensor configuration (setting the sensitivity threshold and selecting output ON and OFF conditions) is performed in TEACH mode. The two LED indicators (bi-color green/red and amber) have distinct roles in the two operation modes. If contrast is marginal, the bi-color indicator will flash green to indicate instability. If this occurs, reconfigure or realign the sensor, or clean the sensor or fiber lenses.

The Signal Strength indicator is Banner's exclusive AID™ (Alignment Indicating Device). Its pulse rate increases as the received light signal strength increases (during programming). This feature simplifies accurate alignment during TEACH mode, and gives a relative indication of sensing contrast between the light and dark conditions.

LED	RUN Mode	TEACH Mode
Solid green	Power is on	
Flashing green	Sensed light level is approaching sensing threshold[3]	
Solid red		Sensor "sees" its own modulated light source; pulse rate is proportional to the received light signal strength[4]
Amber on	Outputs conducting	Ready to TEACH output ON condition
Amber off	Outputs not conducting	Ready to TEACH output OFF condition

[3] This is the Stability indicator, which signals when maintenance, realignment, or reconfiguration is needed during RUN mode.
[4] The faster the pulse rate, the stronger the light signal.

Remote Configuration

The remote function can be used to configure the sensor remotely or to disable the push button for security. Connect the gray wire of the sensor to ground (0 V dc), with a remote programming switch connected between them. Pulse the remote line according to the diagrams in the configuration procedures. The length of the individual programming pulses is equal to the value T where: 0.04 seconds ≤ “T” ≤ 0.8 seconds

Installation

Wiring Diagrams

Cabled Models

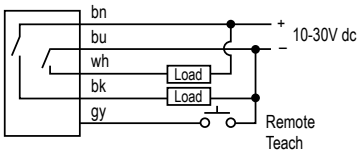

QD Models

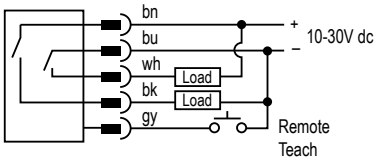

Glass Fiber Installation

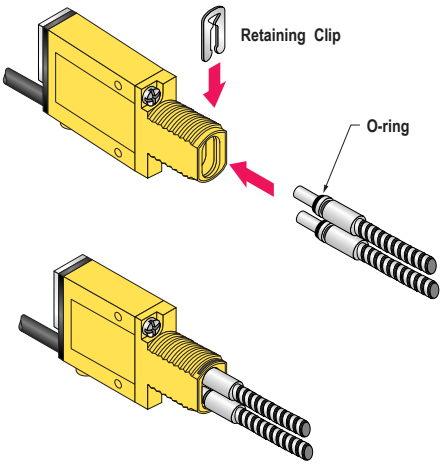

1. Install the O-ring (supplied with the fiber) on each fiber end, as shown in the drawing.
2. While pressing the fiber ends firmly into the ports on the sensor front, slide the U-shaped retaining clip (supplied with the sensor) into the slot in the sensor's barrel, until it snaps into place.

Plastic Fiber Installation

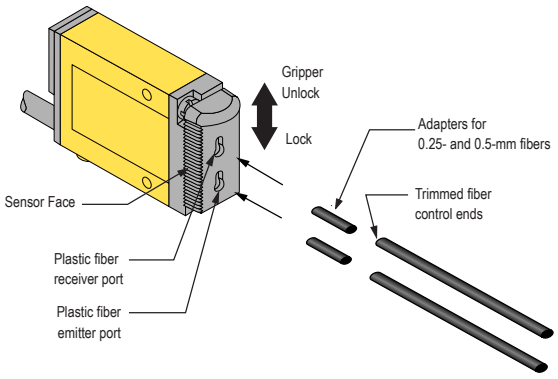

1. With supplied fiber cutter, make a clean cut at the control ends of fibers.
2. Unlock the fiber gripper as shown in the drawing.
3. Apply appropriate fiber adaptors to the fiber, if needed.
4. Gently insert the prepared fiber ends into the ports as far as they will go.
5. Slide the fiber gripper back to lock, as shown in the drawing.

Static Teach

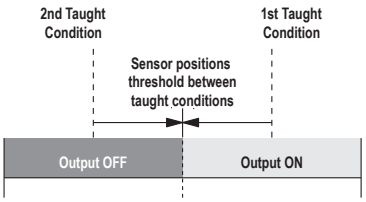

The two sensing conditions may be presented in either order. The condition presented first is the condition for which the output will energize (the “Output ON” target).

Sensitivity is automatically set (and optimized) when teaching the sensor the ON and OFF conditions. When the push button is clicked, the sensor samples each sensing condition and registers it into memory. After the second sensing condition is registered, the MINI-BEAM Expert automatically sets the sensitivity to the optimum value for the application, and then returns to RUN mode.

Push button (0.04 seconds ≤ “Click” ≤ 0.8 seconds); Remote line (0.04 seconds ≤ “T” ≤ 0.8 seconds)

1. Access TEACH mode.

Method	Action	Result
Via push button	Press and hold push button until the bi-color (green/red) indicator begins to flash red, or turns OFF.	Push button method only: The amber LED is on. The red LED pulses to indicate relative received signal strength. The sensor is ready for the output ON condition.
Via remote line	No action required; sensor is ready for 1st sensing condition.	

2. Teach the first sensing condition.

Method	Action	Result
Via push button	Present the first sensing condition and click the push button.	The amber LED is off. The red LED pulses to indicate relative signal strength. The sensor registers the output ON condition and is ready for the output OFF condition.
Via remote line	Present the first sensing condition and single-pulse the remote line.	

3. Teach the second sensing condition and return to RUN mode.

Method	Action	Result
Via push button	Present the second sensing condition and click the push button.	If the teach is accepted the green LED is on (or flashes if the signal is close to the switching threshold) and the amber LED is off until the sensing condition changes; the sensor registers the output OFF condition, positions the threshold, and returns to RUN mode. If the teach is not accepted, the amber LED is on and the red LED pulses to indicate the relative received signal strength. The sensor returns to its wait state and is ready for the first sensing condition.
Via remote line	Present the second sensing condition and single-pulse the remote line.	

NOTE: The sensor returns to RUN mode if the first TEACH condition is not registered within 90 seconds. TEACH mode may be cancelled before either the first or second condition by holding the push button depressed for more than two seconds.

Enabling or Disabling the Push Button

In addition to its programming function, the remote line may be used to disable the push buttons for security. Disabling the push buttons prevents undesired tampering with the sensor configuration settings.

1. Connect the sensor’s gray wire.
2. Four-pulse the remote line to enable or disable the push button.
   The sensor toggles between enable and disable settings and returns to RUN mode.

Specifications

Supply Voltage and Current
10 V dc to 30 V dc (10% maximum ripple) at less than 45 mA, exclusive of load

Supply Protection Circuitry
Protected against reverse polarity and transient voltages

Adjustments
Push-button TEACH mode sensitivity setting; remote TEACH mode input is provided

Indicators
Two LEDs: amber and bi-color green/red

Construction
Reinforced thermoplastic polyester housing, totally encapsulated, o-ring seal, acrylic lenses, and stainless steel screws.

Required Overcurrent Protection

WARNING: Electrical connections must be made by qualified personnel in accordance with local and national electrical codes and regulations.

Overcurrent protection is required to be provided by end product application per the supplied table.
Overcurrent protection may be provided with external fusing or via Current Limiting, Class 2 Power Supply.
Supply wiring leads < 24 AWG shall not be spliced.
For additional product support, go to *http:// www.bannerengineering.com*.

Supply Wiring (AWG)	Required Overcurrent Protection (Amps)
20	5.0
22	3.0
24	2.0
26	1.0
28	0.8
30	0.5

Connections
PVC-jacketed 5-conductor 2 m (6.5 ft) or 9 m (30 ft) unterminated cable, or 5-pin Euro-style quick-disconnect (QD) fitting are available. QD cables are ordered separately.

Application Notes
The first condition presented during TEACH mode becomes the output ON condition.

Output Configuration
Bipolar: One current sourcing (PNP) and one current sinking (NPN) open-collector transistor

Output Rating
150 mA maximum each output at 25° C, derated to 100 mA at 70° C (derate ≈1 mA per °C)
Off-state leakage current: less than 5 µA at 30 V dc
ON-state saturation current: less than 1 V at 10 mA; less than 1.5 V at 150 mA

Output Protection Circuitry
Protected against false pulse on power-up and continuous overload or short-circuit of outputs

Output Response Time
Sensors will respond to either a “light” or a “dark” signal of 500 microseconds or longer duration, 1 kHz max.

NOTE: 1 second delay on power-up; outputs do not conduct during this time.

Repeatability
100 microseconds (all models)

Rating
Meets NEMA standards 1, 2, 3, 3S, 4, 4X, 6, 12, and 13; IEC IP67

Operating Conditions
Temperature: –20° to +70° C (–4° to +158° F)
Max. Relative Humidity: 90% at 50° C (non-condensing)

Troubleshooting

If the MINI-BEAM Expert’s Power LED alternately flashes red/green, this indicates a microprocessor memory error. To clear the error, re-teach the sensor or cycle the power ON and OFF and re-teach the sensor. If this does not solve the problem, or if it occurs frequently, replace the sensor.

Banner Engineering Corp. Limited Warranty

Banner Engineering Corp. warrants its products to be free from defects in material and workmanship for one year following the date of shipment. Banner Engineering Corp. will repair or replace, free of charge, any product of its manufacture which, at the time it is returned to the factory, is found to have been defective during the warranty period. This warranty does not cover damage or liability for misuse, abuse, or the improper application or installation of the Banner product.

THIS LIMITED WARRANTY IS EXCLUSIVE AND IN LIEU OF ALL OTHER WARRANTIES WHETHER EXPRESS OR IMPLIED (INCLUDING, WITHOUT LIMITATION, ANY WARRANTY OF MERCHANTABILITY OR FITNESS FOR A PARTICULAR PURPOSE), AND WHETHER ARISING UNDER COURSE OF PERFORMANCE, COURSE OF DEALING OR TRADE USAGE.

This Warranty is exclusive and limited to repair or, at the discretion of Banner Engineering Corp., replacement. IN NO EVENT SHALL BANNER ENGINEERING CORP. BE LIABLE TO BUYER OR ANY OTHER PERSON OR ENTITY FOR ANY EXTRA COSTS, EXPENSES, LOSSES, LOSS OF PROFITS, OR ANY INCIDENTAL, CONSEQUENTIAL OR SPECIAL DAMAGES RESULTING FROM ANY PRODUCT DEFECT OR FROM THE USE OR INABILITY TO USE THE PRODUCT, WHETHER ARISING IN CONTRACT OR WARRANTY, STATUTE, TORT, STRICT LIABILITY, NEGLIGENCE, OR OTHERWISE.

Banner Engineering Corp. reserves the right to change, modify or improve the design of the product without assuming any obligations or liabilities relating to any product previously manufactured by Banner Engineering Corp.

Copyright Notice

Any misuse, abuse, or improper application or installation of this product or use of the product for personal protection applications when the product is identified as not intended for such purposes will void the product warranty. Any modifications to this product without prior express approval by Banner Engineering Corp will void the product warranties. All specifications published in this document are subject to change; Banner reserves the right to modify product specifications or update documentation at any time. For the most recent version of any documentation, refer to: *www.bannerengineering.com*. © Banner Engineering Corp. All rights reserved.