ATEX/IECEX LED MINI WORKLITE™ WL-50

WITHOUT COMPROMISE

WL-50 & WL-50HT ZONES 1 2 21 22

PRODUCT INFORMATION

The ATEX & IECEx certified WL-50 & WL-50HT light weight mini Worklite™ is an easily carried, rechargeable, high output LED floodlight for use in harsh, remote, hazardous area applications. At just over 9kgs, it weighs around half the weight of the WL-80 and WL-85 worklites, and provides the same outstanding level of light.



KEY INFORMATION

CERTIFICATION

- ATEX and IECEx Approved for Zone 1/21 explosive gas and dust atmospheres
- IP Rating: certified to both IP66 and 67, the Worklite™ is dust tight and protected against powerful water jets and immersion up to 1 metre

AMBIENT APPROVED

- -20°C to +45°C - WL-50
- -20°C to +50°C - WL-50HT

LIGHT OUTPUT

- Up to 3,762 lumens at source
- High power white LED piercing spot beam with flood of lower level fringe light
- LED light source 'fitted for life' with 100,000+ hours life.

LIGHT DURATION

- Up to 5 hours full power
- Up to 10 hours half power

FEATURES

- Toughened glass lens with optional disposable lens guard, robust and durable aluminium construction
- Rechargeable high capacity battery, fully managed & supplied with a mains charger with state of charge indication, powered from 100 to 254Vac
- Compatible with Wolf tripods and magnetic bracket kits, certified anti-static protection kits available
- 2 power levels (high/low) allowing user to accomodate appropriate light based on the work task at hand
- Tilt adjustment within frame to direct light accordingly

TECHNICAL INFORMATION

LIGHT OUTPUT DIAGRAM

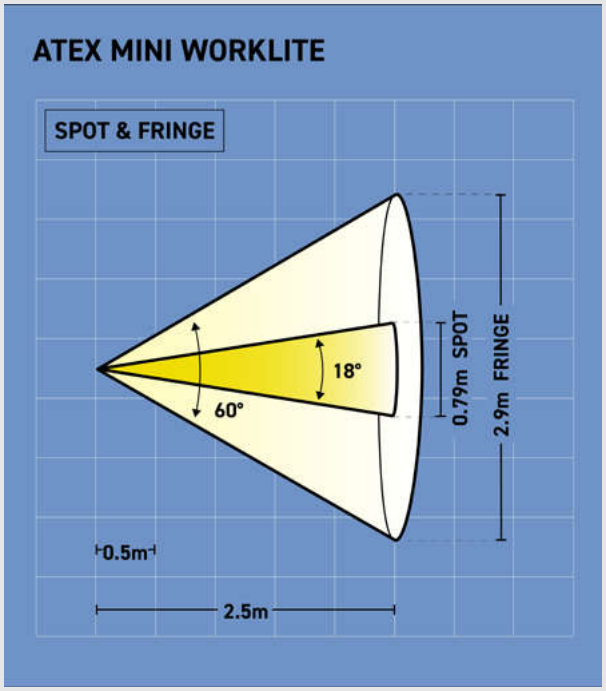

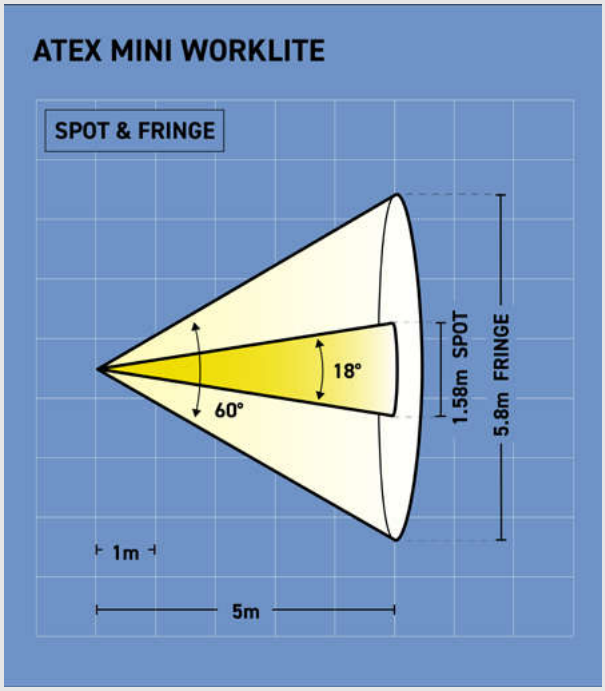

Spot Beam, approximately 18°, with a flood, approximately 60°, of lower level fringe light.

Full Power:
14,146 Lux at 1m
566 Lux at 5m

Half Power:
7,455 Lux at 1m
298 Lux at 5m

PRODUCT DIMENSIONS

WL-50, WL-50HT

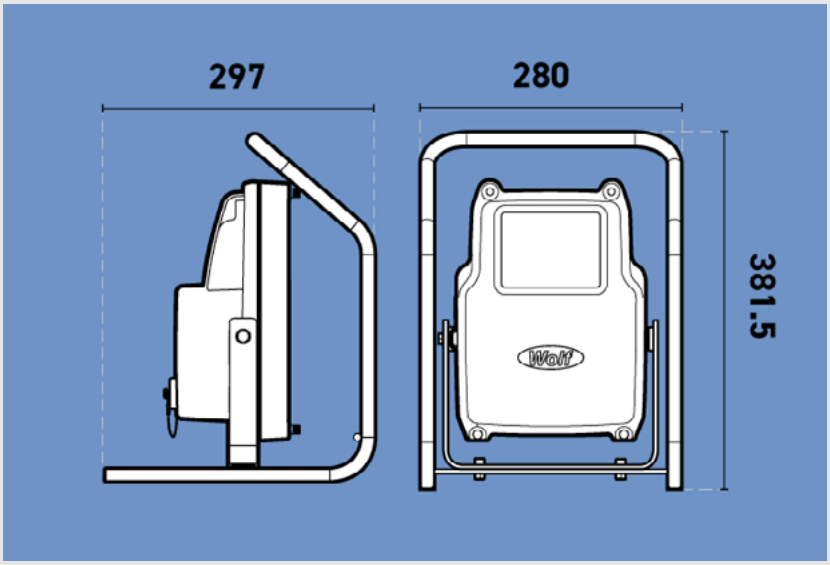

MEASUREMENT MM

ATEX/IECEX LED MINI WORKLITE™ WL-50

PRODUCT REFERENCE		WL-50	WL-50HT
PRODUCT DESCRIPTION		High Power Rechargeable Battery Worklite™	
CODE		Ex eb ib mb IIC T4 Gb Ex tb IIIC T135°C Db	
TYPE OF PROTECTION		'eb' Increased Safety, 'ib' Intrinsic Safety, 'mb' Encapsulation, tb Enclosure Protection	
AREA OF CLASSIFICATION (GAS)		Zones 1 and 2, Gas Groups IIA, IIB, IIC	
TEMPERATURE CLASSIFICATION		T4	
AREA OF CLASSIFICATION (DUST)		Zones 21 and 22, Dust Groups IIIA, IIIB, IIIC	
MAX. SURFACE TEMPERATURE (DUST)		T135°C	
AMBIENT TEMPERATURE		-20°C to +45°C	-20°C to +50°C
CERTIFICATE		CML 18ATEX3373X IECEX CML 18.0199X	
ENCLOSURE		Die Cast Aluminium	
LENS		Toughened Glass Lens	
BEAM TYPE		Spot Beam with a Flood of Low Level Fringe Light	
LIGHT SOURCE:	TYPE	High Power LED	
	POWER/OUTPUT	18 x High Power LEDs / Up to 3,762 lm at source	
	LIFE	100,000hrs+ (Fitted for Life)	
POWER SOURCE:	PART NO.	W-3200	W-3300
	BATTERY TYPE	Rechargeable Battery, Sealed Gel Lead Acid	
	VOLTS	12V	
	CAPACITY	10Ah	9Ah
	LIFE	UP TO 200 RECHARGE CYCLES	
LOW BATTERY INDICATOR		Yes	
LIGHT DURATION - HIGH / LOW		Up to 10 hrs / 5 hrs	Up to 9hrs / 4.5hrs
INGRESS PROTECTION		IP66 and IP67 to IEC60529	
WEIGHT (INC. BATTERY)		9.3kg	
CHARGER INPUT		100 - 254 Vac	
RECHARGE TIME		8 hrs	

All information has been gathered under laboratory conditions, the user must regard the values given as approximate. Changes may be made to the above specification without notification, details are available on request.

Wolf Safety Lamp Company
Saxon Road Works, Sheffield S8 0YA, UK

T: +44 (0) 114 255 1051
E: info@wolfsafety.com