II001A

Inductive sensor

IIA2015-ABOA/6M/3D

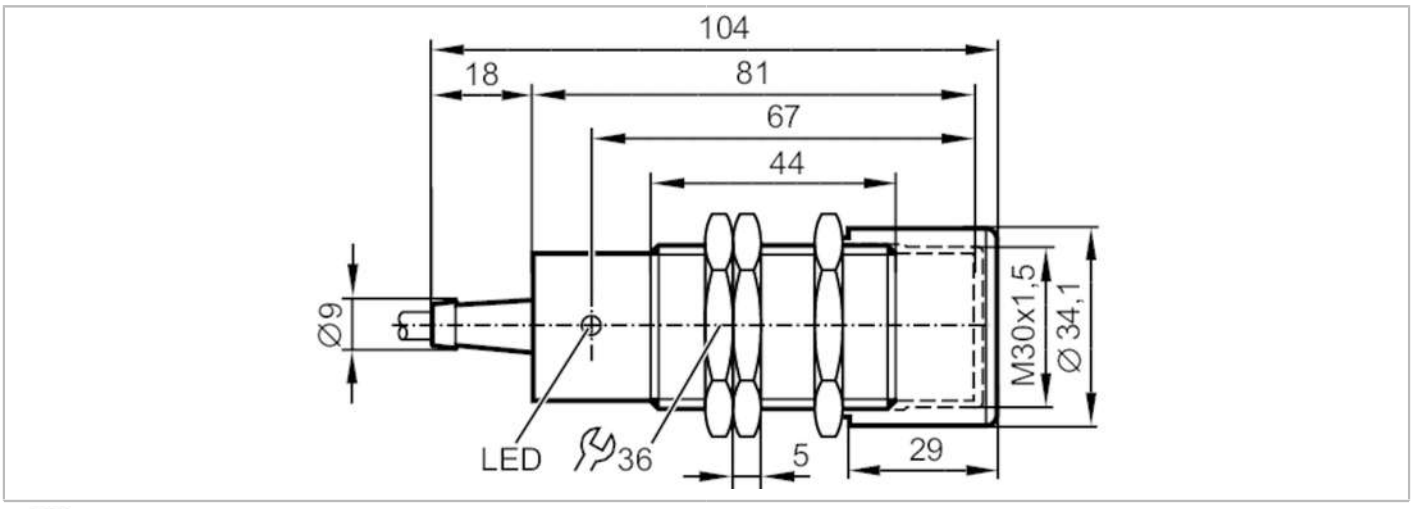

Product characteristics		
Output function		normally open
Sensing range	[mm]	15
Housing		threaded type
Dimensions	[mm]	M30 x 1.5 / L = 81
Application		
Installation		use in hazardous areas only with installed protective cover
Electrical data		
Operating voltage	[V]	20...250 AC/DC
Protection class		II
Reverse polarity protection		yes
Outputs		
Output function		normally open
Max. voltage drop switching output DC	[V]	6
Max. voltage drop switching output AC	[V]	6.5
Minimum load current	[mA]	5
Max. leakage current	[mA]	2.5 (250 V AC) / 1.3 (130 V AC) / 0.8 (24 V DC)
Permanent current rating of switching output AC	[mA]	150
Permanent current rating of switching output DC	[mA]	100
Short-time current rating of switching output	[mA]	2200; (20 ms / 0,5 Hz)
Switching frequency AC	[Hz]	25
Switching frequency DC	[Hz]	50
Notes on switching frequency	[Hz]	only for resistive loads; 2 Hz for utilisation category AC-140
Short-circuit protection		no
Overload protection		no

II001A

Inductive sensor

IIA2015-ABOA/6M/3D

Detection zone			
Sensing range	[mm]	15	
Real sensing range Sr	[mm]	15 ± 10 %	
Operating distance	[mm]	0...12.1	
Accuracy / deviations			
Correction factor		steel: 1 / stainless steel: 0.7 / brass: 0.4 / aluminium: 0.3 / copper: 0.2	
Hysteresis	[% of Sr]	1...20	
Switch point drift	[% of Sr]	-10...10	
Operating conditions			
Ambient temperature	[°C]	-20...60	
Protection		IP 67	
Tests / approvals			
ATEX marking		II 3D Ex tc IIIC T80°C Dc X	
EMC		EN 61000-4-2 ESD	4 kV CD / 8 kV AD
		EN 61000-4-3 HF radiated	3 V/m
		EN 61000-4-4 Burst	2 kV
		EN 61000-4-6 HF conducted	3 V
		IEC 60255-5	1 kV line to line, Ri: 500 Ohm
		EN 55011 emission	class B
MTTF	[years]	607	
Mechanical data			
Weight	[g]	489	
Housing		threaded type	
Mounting		non-flush mountable	
Dimensions	[mm]	M30 x 1.5 / L = 81	
Thread designation		M30 x 1.5	
Materials		brass white bronze coated; sensing face: PBT; lock nuts: brass white bronze coated; Protective cover: PA	
Displays / operating elements			
Display		switching status	1 x LED, yellow
Electrical connection			
Required protection		miniature fuse to IEC60127-2 sheet 1; ≤ 2 A; fast acting; Place the fuse outside the hazardous area.	
Accessories			
Items supplied		lock nuts: 3	
		Protective cover: 1	
Remarks			
Remarks		Recommendation: Check the safe functioning of the unit after a short circuit.	
Pack quantity		1 pcs.	

II001A

Inductive sensor

IIA2015-ABOA/6M/3D

Electrical connection

Cable: 6 m, PVC; 2 x 0.50 mm²

Connection

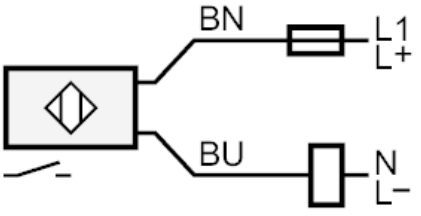

Note miniature fuse to IEC60127-2 sheet 1 ≤ 2 A fast acting
Place the fuse outside the hazardous area.
Core colours :

BN = brown
BU = blue