E11145

Wirable socket

SDOGH040PLSFKSK

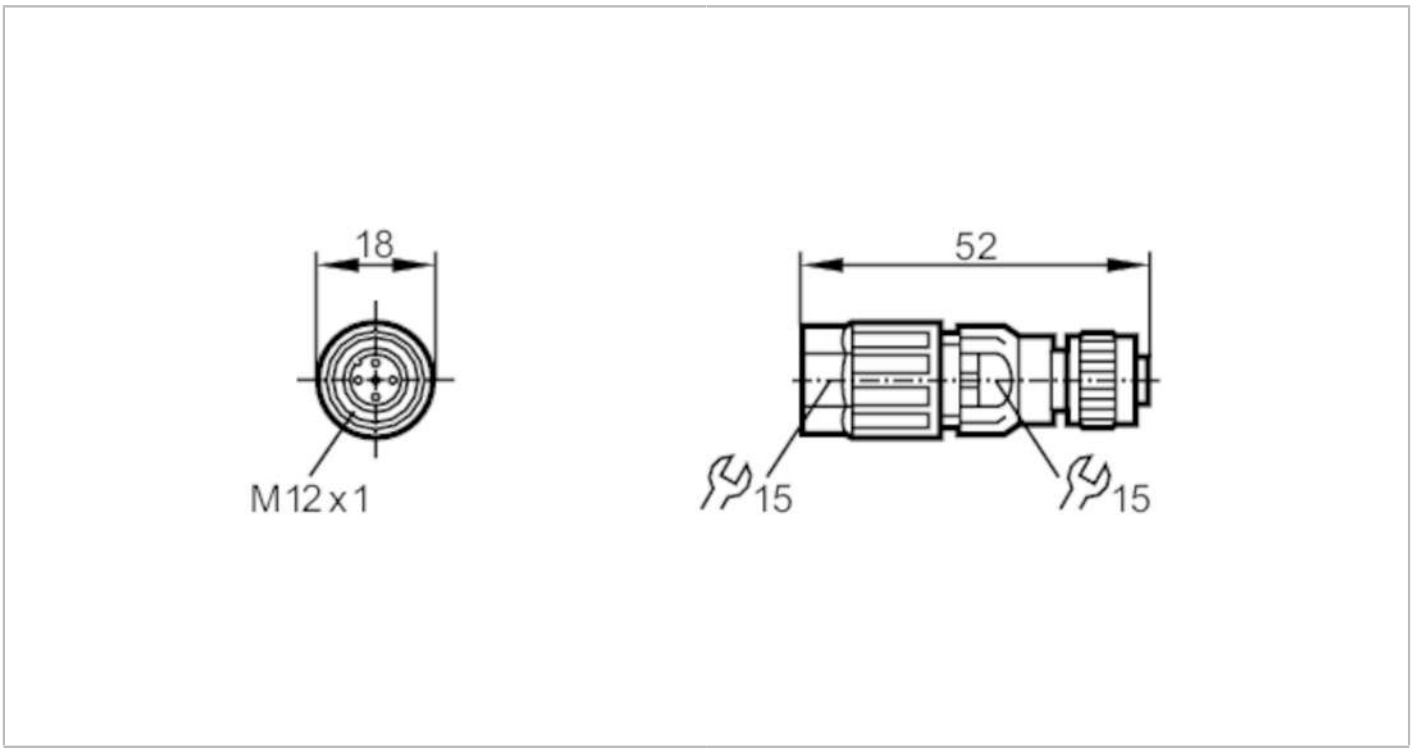

Electrical data		
Operating voltage	[V]	< 45 AC / < 70 DC
Max. current load total	[A]	4
Operating conditions		
Ambient temperature	[°C]	-25...60
Protection		IP 67
Mechanical data		
Weight	[g]	13.5
Dimensions	[mm]	18 x 18 x 52
Materials		PA 6.6
Moulded-body material		PA 6.6
Material nut		PA 6.6
Remarks		
Pack quantity		1 pcs.

Electrical connection

insulation displacement technology: 0.34...0.75 mm²; Core insulation: PVC / PE; (Ø ...2.5 mm); Cable sheath: Ø 4...7.5 mm

Electrical connection - socket

Connector: 1 x M12, straight; coding: A; Moulded body: PA 6.6; Locking: PA 6.6



E11145

Wirable socket

SDOGH040PLSFKSK

Connection

