prevost
Compressed Air Expert

FITTINGS - PLUGS THREADED LINERS - Y PIECES

Female bulkhead fitting - A21



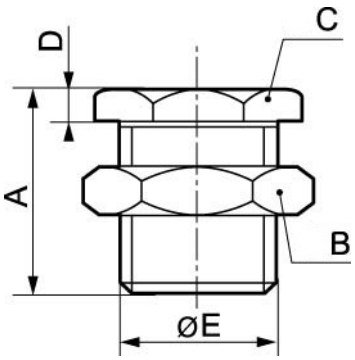

Min / Max operating pressure

0 / 15 bar

Part number	Female thread	Dim. A (mm)	Dim. B (mm)	Dim. C (mm)	Dim. D (mm)	Dim. E (mm)
A21 18	G1/8	18	19	22	4	15.5
A21 14	G1/4	26	27	24	5	19.5
A21 38	G3/8	26	30	32	5	25.5
A21 12	G1/2	33.5	36	32	6.5	27.5