PRODUCT DETAILS

ARTICLE: 39036CC

WHEEL U 175X50/60 47X17 BB 20+HT GREASE



Wheel series U

Die-cast aluminium wheels, for high temperature applications: -40°C / +270°C (-40°F / +518°F). Available with standard or stainless steel ball bearings.
Wheel fitted with ball bearings.

Technical data

Wheel diameter	D	175 mm
Tyre width	E	50,0 mm
Bearing seat diameter	s	47 mm
Bore diameter	d	20 mm
Outer faces bearings distance	V	54 mm
Weight article		1,030 kg
Hub width	L	60 mm
Load Capacity		500 kg

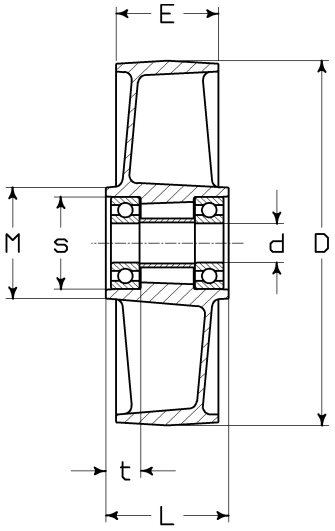

GENERAL INFORMATION / RECOMMENDATIONS AND WARNINGS
The cited text and the complete catalogue in their most up-dated versions are available in the OEM's website page www.lagspa.it/downloads. The dimensions, descriptions, specifications and illustrations herein are indicative and subject to variations without notice. The fact that products are illustrated herein does not necessarily imply they are available from stock nor does it place us under any obligation to supply them.
Tests carried out refer to the original products with original accessories: the replacement of one of the components with others of different manufacture might prevent the same results from being achieved and will automatically invalidate any guarantee. Please contact our technical service concerning any special application.