THE INFORMATION CONTAINED IN THIS DRAWING IS THE SOLE PROPERTY OF L-COM, INC. ANY REPRODUCTION IN PART OR WHOLE WITHOUT THE WRITTEN PERMISSION OF L-COM, INC. IS PROHIBITED.

RoHS Compliant ✔

REVISIONS			
REV	DESCRIPTION	DATE	APPROVED
A	RELEASED FOR PRODUCTION	4/30/01	DFP
B	ECN 6795: REVISED CONTACTS TO 30u", NEW FORMAT, PACKAGING	4/15/13	D.FRISIELLO

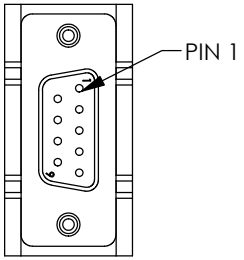

9 PIN MALE
D-SUB CONNECTOR

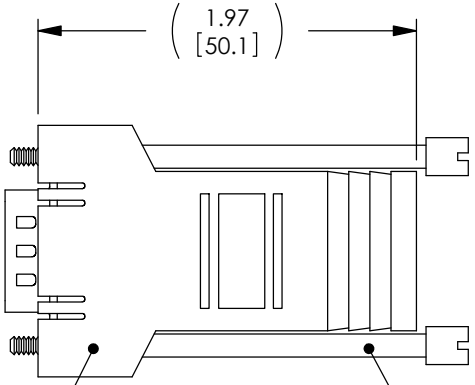

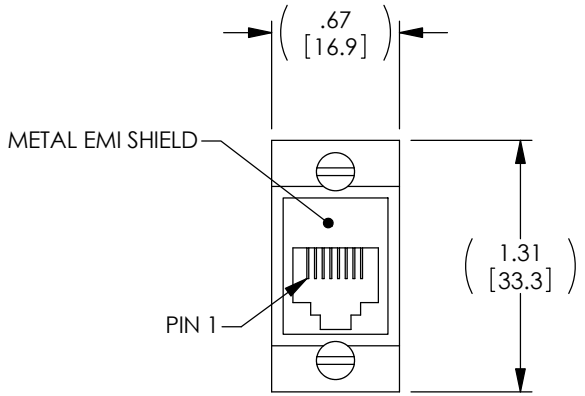

"J1"
RJ45 JACK
(8X8)
SHIELDED

WIRING CHART	
LEAD COLOR	"J1"
BLUE	1
ORANGE	2
BLACK	3
RED	4
GREEN	5
YELLOW	6
BROWN	7
WHITE	8

NOTES:

1. MOLDED PARTS ARE 94V-0 PLASTIC, ABS, GRAY.
2. (B) CONTACTS HAVE 30 MICRO INCHES OF GOLD PLATE.
3. STRANDED COPPER LEADS ARE COLOR CODED.
4. ADAPTER KIT MAY BE PROGRAMMED AS NEEDED BY INSERTING AND SEATING EACH MALE CONTACT IN THE DESIRED POSITION IN THE D-SUB SHELL.
5. D-SUB FRAME SNAPS SECURELY INTO HOUSING.
6. RJ45 SHIELDING IS TIED TO D-SUB SHELL.
7. (B) ADAPTER KIT IS SUPPLIED UN-ASSEMBLED, IN A LOGO BAG PER L-COM SPECIFICATION PS-0031.

(B)

UNLESS OTHERWISE SPECIFIED,
DIMENSIONS ARE IN INCHES [mm]
OVERALL CABLE LENGTH TOLERANCE:
≤12 [305] = +1 [25] / -0
>12 [305] ≤60 [1524] = +2 [51] / -0
>60 [1524] ≤120 [3048] = +4 [102] / -0
>120 [3048] ≤300 [7620] = +6 [152] / -0
>300 [7620] = +5% / -0%
ALL OTHER DIMENSIONAL TOLERANCES:
.X = ± .2
.XX = ± .02
.XXX = ±.005
PROJECTION

APPROVALS		DATE
DRAWN BY	D PARHAM	4/17/2001
CHECKED BY	T CLARK	4/24/2001
APPROVED BY	R CARRICK	4/30/2001

CONFIGURATION DETAILS OF UNDIMENSIONED FEATURES MAY VARY

COLOR VARIATIONS MAY OCCUR

L-COM Global Connectivity
45 BEECHWOOD DRIVE
NORTH ANDOVER, MA
01845

CATEGORY
TELECOM/MODULAR

PRODUCT DESCRIPTION
ADAPTER DB9M TO RJ45 SHLD JACK

SIZE	FSCM NO.	DWG. NO.	REV.
A	43321	RS9EMI8M	B

SCALE: NONE | CAD FILE: RS9EMI8M.SLDDRW | SHEET 1 OF 1