Product Data Sheet
February 2015
00813-0100-4030, Rev GE

Rosemount 2120

Full-featured Vibrating Fork Liquid Level Switch



- Designed for operation in process temperatures of –40 to 302 °F (–40 to 150 °C)
- Electronic self-checking and condition monitoring
- Increased safety, **SIL2**-certified to IEC 61508 as required by IEC 61511 and **SIL3** capable
- Adjustable switching delay for turbulent or splashing applications
- “Fast Drip” fork design gives a quicker response time, especially with viscous liquids
- General area, explosion-proof/flameproof, and intrinsically safe options

ROSEMOUNT®

EMERSON™
Process Management

Overview of the Rosemount 2120

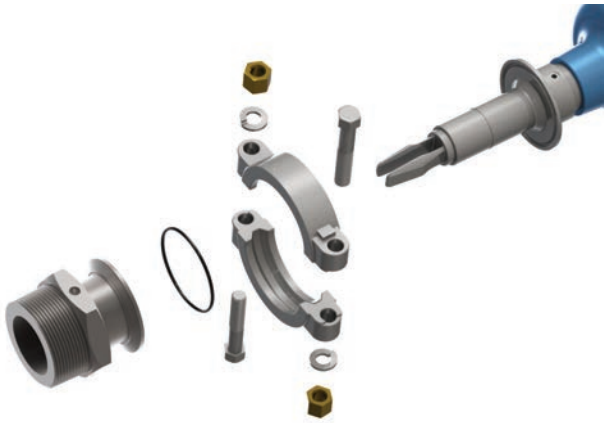

The Quick Release kit is a new optional set of accessories. It makes inspection, proof-testing, and servicing easier than ever (see Table 2 on page 8 for accessories)



There is a variety of plug-in electronics options, with each having an adjustable mode and switching delay (see "Electrical connections" on page 11)



'Fast drip' forks

Measurement principle

The Rosemount 2120 is designed using the principle of a tuning fork. A piezo-electric crystal oscillates the forks at their natural frequency. Changes to this frequency are continuously monitored. The frequency of the vibrating fork sensor changes depending on the medium in which it is immersed. The denser the liquid, the lower the frequency.

When used as a **low level alarm**, the liquid in the tank or pipe drains down past the fork, causing a change of natural frequency that is detected by the electronics and switches the output state.

When the 2120 is used as a **high level alarm**, the liquid rises in the tank or pipe, making contact with the fork which then causes the output state to switch.

Key features and benefits

- Function virtually unaffected by flow, bubbles, turbulence, foam, vibration, solids content, coating products, liquid properties, and product variations
- The 2120 is designed for operation in process temperatures from –40 to 302 °F (–40 to 150 °C)
- A 'heartbeat' LED indicates its operating state. The LED also flashes when the switch output is 'off' and is constantly lit when 'on'
- Adjustable switching delay prevents false switching in turbulent or splashing applications
- 'Fast Drip' fork design gives quicker response time, especially with viscous liquids. Rapid wet-to-dry and dry-to-wet time setting for highly responsive switching
- Fork shape is optimized for hand polishing to meet hygienic requirements
- Magnetic test point makes functional test easy
- No moving parts or crevices for virtually no maintenance

Contents

Overview of the Rosemount 2120 . . . . . page 2
Rosemount 2120 Level Switch Ordering . . . . . page 4
Rosemount 2120 Spare Parts and Accessories . . . page 8
Specifications . . . . . page 9
Product Certifications . . . . . page 12
Dimensional Drawings . . . . . page 15

Fit and forget

- Once installed, the 2120 is ready to go.
  It needs no calibration and requires minimum installation
- The 'heartbeat' LED gives an instant visual indication that the unit is operational
- Functional testing of the instrument and system is easy with a magnetic test point
- You can install, and forget it

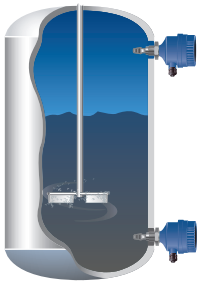

High and low level alarm

Superior performance

- The 2120 is a popular choice for high and low level alarm and pump control duties for its simplicity, ease of use, and reliability
- Functionality is virtually unaffected by flow, turbulence, bubbles, foam, or vibration
- The 'Fast Drip' design allows the liquid to be quickly drawn away from the fork tip when mounted horizontally, making the 2120 quicker and more responsive in high density or viscous liquid applications
- With a user-selectable time delay feature, the risk of false switching is minimized in turbulent or splashing applications



High-temperature applications

Applications

- Overfill protection
- High and low point level alarms
- Pump control or limit detection
- Run dry or pump protection
- Hygienic applications
- High-temperature applications
- Wireless applications

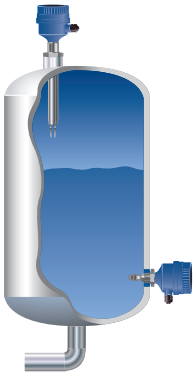

Pump control / limit detection

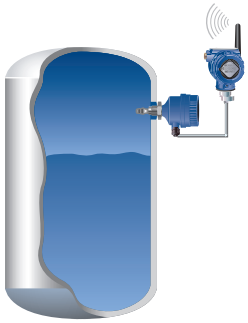

Wireless applications using a Rosemount 702 Discrete Transmitter

In tank gauging systems, a Rosemount 2120 high level alarm switch can be used as an alternative to a radar level gauge (see the Rosemount Tank Gauging product data sheet 00813-0100-5100 for details)

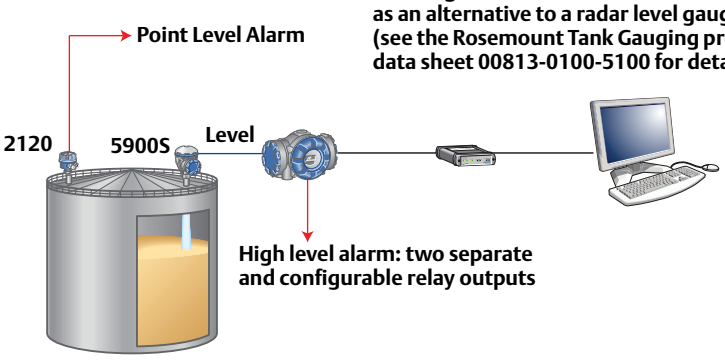

Rosemount 2120 Level Switch Ordering

Specification and selection of product materials, options, or components must be made by the purchaser of the equipment. See page 9 for more information on Material Selection.

Table 1. Rosemount 2120 ordering information

The starred options (★) represent the most common options and should be selected for best delivery. The non-starred offerings are subject to additional delivery lead time.

Model	Product description	
2120	Vibrating Fork Liquid Level Switch / –40...302 °F (–40...150 °C)	
Materials of construction: process connection/fork		
D	316/316L Stainless Steel (1.4401/1.4404) dual certified	★
Expanded		
F[(1)]	ECTFE/PFA copolymer, coated 316/316L SST (1.4401/1.4404)	
C	Alloy C (UNS N10002), Alloy C-276 (UNS N10276), Solid	
Process connection size / type		
0A	3/4-in. BSPT (R) Thread	★
0B	3/4-in. BSPP (G) Thread	★
0D	3/4-in. NPT Thread	★
1A	1-in. BSPT (R) Thread	★
1B	1-in. BSPP (G) Thread	★
1D	1-in. NPT Thread	★
2D[(3)]	2-in. NPT Thread	★
1P	1-in. BSPP (G), O-ring, Hygienic Fitting	★
5R	1 1/2-in. (38 mm) Tri-Clamp, Hygienic Fitting	★
2R	2-in. (51 mm) Tri-Clamp, Hygienic Fitting	★
8Q	Mobrey A Flange	★
9Q	Mobrey G Flange	★
1G	1-in. ASME B16.5 Class 150 Raised Face (RF) Flange	★
1H	1-in. ASME B16.5 Class 300 Raised Face (RF) Flange	★
1J	1-in. ASME B16.5 Class 600 Raised Face (RF) Flange	★
5G	1 1/2-in. ASME B16.5 Class 150 Raised Face (RF) Flange	★
5H	1 1/2-in. ASME B16.5 Class 300 Raised Face (RF) Flange	★
2G	2-in. ASME B16.5 Class 150 Raised Face (RF) Flange	★
2H	2-in. ASME B16.5 Class 300 Raised Face (RF) Flange	★
3G	3-in. ASME B16.5 Class 150 Raised Face (RF) Flange	★
3H	3-in. ASME B16.5 Class 300 Raised Face (RF) Flange	★
4G	4-in. ASME B16.5 Class 150 Raised Face (RF) Flange	★
4H	4-in. ASME B16.5 Class 300 Raised Face (RF) Flange	★
1K	DN25, EN1092 PN 10/16 Flange	★
1L	DN25, EN1092 PN 25/40 Flange	★
1M	DN25, EN1092 PN 63 Flange	★
1N	DN25, EN1092 PN 100 Flange	★
5K	DN40, EN1092 PN 10/16 Flange	★
5L	DN40, EN1092 PN 25/40 Flange	★
2K	DN50, EN1092 PN 10/16 Flange	★
2L	DN50, EN1092 PN 25/40 Flange	★
7K	DN65, EN1092 PN 10/16 Flange	★
7L	DN65, EN1092 PN 25/40 Flange	★
3K	DN80, EN1092 PN 10/16 Flange	★
3L	DN80, EN1092 PN 25/40 Flange	★

Table 1. Rosemount 2120 ordering information

The starred options (★) represent the most common options and should be selected for best delivery. The non-starred offerings are subject to additional delivery lead time.

4K	DN100, EN1092 PN 10/16 Flange			★
4L	DN100, EN1092 PN 25/40 Flange			★
5J	1 1/2-in. ASME B16.5 Class 600 Raised Face (RF) Flange			
2J	2-in. ASME B16.5 Class 600 Raised Face (RF) Flange			
3J	3-in. ASME B16.5 Class 600 Raised Face (RF) Flange			
4J	4-in. ASME B16.5 Class 600 Raised Face (RF) Flange			
5M	DN40, EN1092 PN 63 Flange			
5N	DN40, EN1092 PN 100 Flange			
2M	DN50, EN1092 PN 63 Flange			
2N	DN50, EN1092 PN 100 Flange			
7M	DN65, EN1092 PN 63 Flange			
7N	DN65, EN1092 PN 100 Flange			
3M	DN80, EN1092 PN 63 Flange			
3N	DN80, EN1092 PN 100 Flange			
4M	DN100, EN1092 PN 63 Flange			
4N	DN100, EN1092 PN 100 Flange			
SA	25A, 10K, JIS B2220 Flange			
SB	25A, 20K, JIS B2220 Flange			
TA	40A, 10K, JIS B2220 Flange			
TB	40A, 20K, JIS B2220 Flange			
UA	50A, 10K, JIS B2220 Flange			
UB	50A, 20K, JIS B2220 Flange			
VA	80A, 10K, JIS B2220 Flange			
VB	80A, 20K, JIS B2220 Flange			
ZA	100A, 10K, JIS B2220 Flange			
ZB	100A, 20K, JIS B2220 Flange			
XX[2]	Customer Specific			
Electronic type			**Available certifications**	
T	Direct load switching (Mains 2-wire) 20 to 264 Vac 50/60Hz, 20 to 60 Vdc		NA, E*, G*	★
F[3]	PNP/PLC (3-wire) 9...30 Vdc		NA, E*, G*	★
G	PNP/PLC (3-wire) 20 to 60 Vdc		NA, E*, G*	★
D[3]	Relay DPCO 9...30 Vdc		NA, E*, G*	★
V	Relay DPCO 20 to 264 Vac 50/60Hz, 20 to 60 Vdc		NA, E*, G*	★
K	NAMUR		All except IP	★
H	8/16 mA		All except I3	★
Surface finish			**Available connections**	
1	Standard surface finish		All	★
2[4][5]	Hand polished (Ra < 0.4 μm)		Hygienic Connection Only	★
Product certifications		**Electronic types allowed**	**Available housings**	
NA	No Hazardous Locations Certifications	All except 9...30 Vdc types	All	★
G5[6]	FM Ordinary Locations (unclassified, safe area)	All	Y, T	★
G6[7]	CSA Ordinary Locations (unclassified, safe area)	All except 9...30 Vdc types	Y, T	★
GM	Technical Regulation Customs Union (EAC), Ordinary Loc.	All except 9...30 Vdc types	[3]	★
GP	Korean Test Laboratory (KTL), KCC mark for Ordinary Loc.	All except 9...30 Vdc types	All	★
E1	ATEX Flameproof	All except 9...30 Vdc types	X, S	★
E2	INMETRO Flameproof	All except 9...30 Vdc types	X, S	★
E3	NEPSI Flameproof	All except 9...30 Vdc types	X, S	★
E5[6]	FM Explosion-proof	All	Y, T	★

Table 1. Rosemount 2120 ordering information

The starred options (★) represent the most common options and should be selected for best delivery. The non-starred offerings are subject to additional delivery lead time.

E6[7]	CSA Explosion-proof	All except 9...30 Vdc types	Y, T	★
E7	IECEx Explosion-proof	All except 9...30 Vdc types	X, S	★
EM	Technical Regulation Customs Union (EAC), Flameproof	[3]	[3]	★
EP	KTL/KOSHA Flameproof	All	X, S	★
I1	ATEX Intrinsic Safety	K, H	All	★
I2	INMETRO Intrinsic Safety	K, H	All	★
I3	NEPSI Intrinsic Safety	K	All	★
I5	FM Intrinsic Safety	K, H	All	★
I6	CSA Intrinsically Safe	K, H	All	★
I7	IECEx Intrinsic Safety	K, H	All	★
IM	Technical Regulation Customs Union (EAC), Intrinsic. Safe	[3]	[3]	★
IP	KTL/KOSHA Intrinsic Safety	H	All	★
Housing			**Available for certifications**	
A	Glass Filled Nylon, M20 conduits/cable threads		NA, I1, I2, I3, I5, I6, I7, and IP	★
D	Glass Filled Nylon, 1/2-in. ANPT conduits/cable threads		NA, I1, I2, I3, I5, I6, I7, and IP	★
X	Aluminum Alloy, M20 conduits/cable threads		All except G5, G6, E5, E6	★
Y	Aluminum Alloy, 3/4-in. ANPT conduits/cable threads		All except E1, E2, E3, E7, and EP	★
S	Stainless Steel, M20 conduits/cable threads		All except G5, G6, E5, E6	★
T	Stainless Steel 3/4-in. ANPT conduits/cable threads		All except E1, E2, E3, E7, and EP	★
Fork length			**Available connection**	
A	Standard length 1.7 in. (44 mm)		All except flanged and 2-in. NPT	★
H[8]	Standard length flange 4.0 in. (102 mm)		All flanged models	★
E[9]	Extended, customer specified length in tenths of inches		All except 1-in. BSPP O-ring (1P)	★
M[9]	Extended, customer specified length in millimeters		All except 1-in. BSPP O-ring (1P)	★
Specific extended fork length				
0000	Factory default length (only if Fork Length A or H is selected)			★
XXXX[9]	Specific customer specified length in tenths of inches, or millimeters (XXXX mm or XXX.X inches)			★
Typical Model Number: 2120 D 0A K 1 I1 A 0000				

Options (include with the selected model number)

Calibration data certification		
Q4	Certificate of functional test	★
Material traceability certification		
Q8[8][10]	Material traceability certification per EN 10204 3.1	★
Material certification		
Q15[8][10]	NACE MR0175 / ISO 15156	★
Q25[8][10]	NACE MR0103	★
Safety certification		
QS[3]	Prior-use certificate of FMEDA Data	★
QT[3]	Safety certificate to IEC61508	★
Special procedures		
P1[11]	Hydrostatic testing with certificate	★
Overfill		
U1[3]	WHG/DIBt overfill protection	★
Extended product warranty		
WR3[3]	3-year limited warranty	★
WR5[3]	5-year limited warranty	★
Example of options included with the model number: 2120 D 0A K 1 I1 A 0000 Q8 WR5		

(1) ECTFE/PFA copolymer coating is only available for a flanged 2120 but excludes 1-in./DN25/25A flanges. Flanges are dual certified 316 and 316L Stainless Steel (1.4401 and 1.4404).

(2) Other process connections available upon request.

(3) Contact an Emerson Process Management representative for additional information.

(4) Not available with Material of Construction Process / Fork option code H.

(5) Hand-polished for hygienic connections to better than 0.4 µm Ra such that there are no pits, folds, crevices or cracks discernible to the naked eye (i.e. no features larger than 75 micrometers based on resolving 1/60 degree at a distance of 250 mm).

(6) See "Product Certifications" on page 12. E5 includes G5 requirements. G5 is for use in unclassified, safe area locations only.

(7) See "Product Certifications" on page 12. E6 includes G6 requirements. G6 is for use in unclassified, safe area locations only.

(8) Not available for hand polished wet side.

(9) Minimum length available for $^{3}/_{4}$-in. threaded connection is 3.8 in. (95 mm); for 1-in. and 2-in. threaded, it is 3.7 in. (94 mm); for flanged, it is 3.5 in. (89 mm); and for Tri-Clamp, it is 4.1 in. (105 mm). Maximum length is 157.5 in. (4000 mm), except for ECTFE/PFA copolymer coating and hand-polished process where the maximum length is 59.1 in. (1500 mm) and 39.4 in. (1000 mm) respectively. Examples: Code E1181 is 118.1 inches. Code M3000 is 3000 millimeters.

(10) Only available for wetted parts.

(11) Option limited to units with extended lengths up to 59.1-in. (1500 mm). Option is not available for ECTFE/PFA coating.

Safety Integrity Level (SIL) certification option

- The Rosemount 2120 is SIL2-certified, and is also SIL3 capable.
- The Rosemount 2120 has been independently certified to IEC 61508 as required by IEC 61511. Certification was conducted by Exida. If required, add "**QT**" to the end of the model code. For example, 2120 D 0A K E1 X A0000 **QT**. (Note that you can have one or more OPTIONS codes at the end).
- Contact an Emerson Process Management representative or go to http://www.emersonprocess.com/rosemount/safety/ for additional information.

Overfill approval option

- The Rosemount 2120 has been TÜV-tested and approved for overfill protection according to the German DIBt/WHG regulations. If required, add "**U1**" to the end of the model code. For example, 2120 D 0A K E1 X A0000 **U1**. (Note that you can have one or more OPTIONS codes at the end).

Rosemount 2120 Spare Parts and Accessories

Specification and selection of product materials, options, or components must be made by the purchaser of the equipment. See page 9 for more information on Material Selection.

Table 2. Rosemount 2120 spare parts and accessories

The starred options (★) represent the most common options and should be selected for best delivery. The non-starred offerings are subject to additional delivery lead time.

Spares and accessories[1] [2]		
02100-1000-0001	Seal for 1-in. BSPP (G1A). Material: Non-asbestos BS7531 grade X carbon fiber with rubber binder	★
02100-1040-0001	Seal for 3/4-in. BSPP (G3/4A). Material: Non-asbestos BS7531 grade X carbon fiber with rubber binder	★
02100-1010-0001	Hygienic adaptor boss 1-in. BSPP. Material: 316 SST fitting. FPM/FKM O-ring	★
02100-1020-0001	2-in. (51 mm) Tri-clamp kit (vessel fitting, clamp ring, and seal). Material: 316 SST, NBR Nitrile	★
02100-1030-0001	Telescopic test magnet	★
02120-2000-0001[3]	1 1/2-in. BSPP adjustable 316 SST clamp gland for 1-in. extended lengths. Silicone (Si) rubber seal	★
02120-2000-0002[3]	1 1/2-in. NPT adjustable 316 SST clamp gland for 1-in. extended lengths. Silicone (Si) rubber seal	★
02120-7000-0001[4]	Replacement Cassette: Direct load switching (2 Wire) (Red)	★
02120-7000-0002[4]	Replacement Cassette: PNP/PLC, 20 to 60 Vdc (Yellow)	★
02120-7000-0003[4]	Replacement Cassette: NAMUR (Light Blue)	★
02120-7000-0004[4]	Replacement Cassette: Relay (DPCO), standard version (Green)	★
02120-7000-0005[4]	Replacement Cassette: 8/16 mA output (Dark Blue)	★
02120-7000-0007[4]	Replacement Cassette: Relay (DPCO), 9...30 Vdc (12 Vdc nominal) version (Green)	★
02100-1060-0001[5]	Quick Release kit (contains 2-in. Tri-Clamp, seal, and quick release device for 2-in. NPT process connection)	

(1) Check the Electronic Type and Product Certification sections in Table 1 on page 4 for availability conditions.

(2) Intrinsically Safe (IS) approved cassettes can only be replaced with the same type of IS cassette. Non-IS cassette types can be interchanged with other non-IS cassettes, but the new label must be fitted and the original part number transferred to the new label.

(3) The adjustable clamp gland is not explosion-proof.

(4) This replacement cassette is for versions of the Rosemount 2120 shipped since June 2013.

(5) The Quick Release kit is a set of accessories requiring a Rosemount 2120 with the 2-in. Tri-clamp option and an existing 2-in. NPT process connection on the vessel. For additional information, see Rosemount 2120 Quick Release kit – quick start guide (document number 00825-0200-4030). Contact an Emerson Process Management representative for the current availability of the kit.

Specifications

General

Product

- Rosemount 2120 Full-featured Vibrating Fork Liquid Level Switch.

Measuring principle

- Vibrating Fork.

Applications

- Most liquids including coating liquids, aerated liquids, and slurries.

Mechanical

Housing / Enclosure

Table 3. Housing / Enclosure specification

Housing Code	A	D	X	Y	S	T
Housing Material	Nylon PA66 30%GF		Al alloy ASTM B85 A360.0		316C12 SST	
Rotational	Yes		No		No	
Housing Paint	Not Applicable		Polyurethane Paint		Not Applicable	
LED Window	Nylon PA12		None		None	
Conduit Entry	M20	1/2-in. ANPT	M20	3/4-in. ANPT	M20	3/4-in. ANPT
Ingress Protection	IP66/67 to EN60529		IP66/67 to EN60529, NEMA 4X		IP66/67 to EN60529, NEMA 4X	

Connections

- Threaded, hygienic, and flanged process connections.
  See **"Process connection size / type"** on page 4 for a complete list.

Extended lengths

- The maximum extended length is 157.5 in. (4000 mm) except for ECTFE/PFA copolymer coating and hand-polished process connection options which have a maximum length of 59.1 in. (1500 mm) and 39.4 in. (1000 mm) respectively.

Table 4. Minimum extended lengths

Process Connection	Minimum Extended Length
3/4–in. Threaded	3.8 in. (95 mm)
1–in. and 2-in. Threaded	3.7 in. (94 mm)
Flanged	3.5 in. (89 mm)
Tri-Clamp	4.1 in. (105 mm)

Dimensional drawings

- See "Dimensional Drawings" on page 15.

Material selection

- Emerson provides a variety of Rosemount product with various product options and configurations including materials of construction that can be expected to perform well in a wide range of applications. The Rosemount product information presented is intended as a guide for the purchaser to make an appropriate selection for the application. It is the purchaser's sole responsibility to make a careful analysis of all process parameters (such as all chemical components, temperature, pressure, flow rate, abrasives, contaminants, etc.), when specifying product, materials, options and components for the particular application. Emerson Process Management is not in a position to evaluate or guarantee the compatibility of the process fluid or other process parameters with the product, options, configuration or materials of construction selected.

Process connection materials

- 316/316L Stainless Steel (1.4401/1.4404 dual certified).
- Alloy C (UNS N10002) and Alloy C-276 (UNS N10276)
  – available for flanged, and BSPT and NPT threaded process connections (3/4-in. and 1-in. BSPT (R), and 3/4-in. and 1-in. NPT).
- ECTFE/PFA co-polymer coated 316/316L Stainless Steel (1.4401/1.4404 dual certified)
  – only available for a flanged 2120 but excludes 1-in./DN25/25A flanges.
- Hand-polished to better than 0.4 µm option for hygienic connections.
- Gasket material for 3/4-in. and 1-in. BSPP (G) is non-asbestos BS7531 Grade X carbon fiber with rubber binder.

Functional

Maximum operating altitude

- 6562 ft. (2000 m)

Maximum operating pressure

- The final rating depends on the selected process connection.
- Threaded connection: see Figure 1 for operating pressures
  Note: Clamp glands 02120-2000-0001 and 02120-2000-0002 (page 8) limit the maximum pressure to 18.85 psig (1,3 bar g).
- Hygienic connection: 435 psig (30 bar g).
- Flanged connection:
  See Figure 1 or Table 5 (*whichever gives the lowest pressure*).

Figure 1. Process pressure

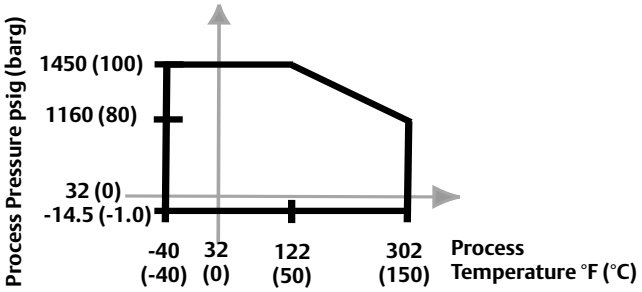

Table 5. Maximum flange pressure rating

Standard	Class/Rating	SST Flanges
ASME B16.5	Class 150	275 psig(1)
ASME B16.5	Class 300	720 psig(1)
ASME B16.5	Class 600	1440 psig(1)
EN1092-1	PN 10	10 barg(2)
EN1092-1	PN 16	16 barg(2)
EN1092-1	PN 25	25 barg(2)
EN1092-1	PN 40	40 barg(2)
EN1092-1	PN 63	63 barg(2)
EN1092-1	PN 100	100 barg(2)
JIS B2220	10K	14 barg(3)
JIS B2220	20K	34 barg(3)

(1) At 100 °F (38 °C), the rating decreases with an increasing process temperature.

(2) At 122 °F (50 °C), the rating decreases with an increasing process temperature.

(3) At 248 °F (120 °C), the rating decreases with an increasing process temperature.

Minimum and maximum operating temperatures

- See Figure 2 for operating temperatures.
- Clamp glands 02120-2000-0001 and 02120-2000-0002 (page 8) limit the maximum temperature to 257 °F (125 °C).
- The ambient temperature for a 8/16 mA cassette is limited to 158 °F (70 °C) in dust applications.

Figure 2. Operating temperatures

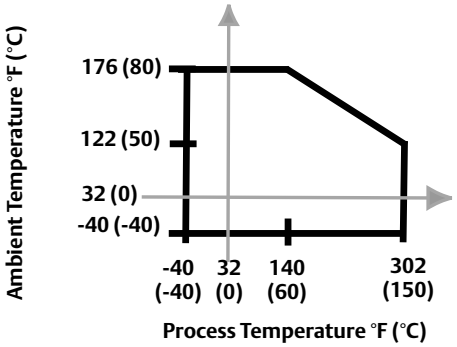

Liquid density requirement

- Minimum 37.5 lb/ft^3 (600 kg/m^3).

Liquid viscosity range

- Up to 10000 cP (centiPose).

Solids content and coating

- Maximum recommended diameter of solid particles in the liquid is 0.2 in. (5 mm).
- For a coating product, avoid bridging of forks.

Switching delay

- User selectable 0.3, 1, 3, 10, 30 seconds delay for dry-to-wet and wet-to-dry switching.

CIP (Clean In Place) and SIP (Steam In Place) cleaning

- Withstands cleaning routines up to 275 °F (135 °C).

NACE

- NACE compliance to MR0175 / ISO 15156 or MR0103, depending on the option code selected for the model number.

Safety integrity level

- The Rosemount 2120 FMEDA is certified for SIL2, and is SIL3 capable
- For more information, go to: http://www.emersonprocess.com/rosemount/safety/

Performance

Hysteresis (water)

- ±0.039-in. (±1 mm) nominal.

Switching point (water)

- 0.5 in. (13 mm) from tip (vertical) / from edge (horizontal) of fork (this will vary with different liquid densities).

Electrical

Switching mode

User selectable switching mode (Dry=on or Wet=on).

Protection

- Polarity insensitive
  – *Relay (except 12 Vdc nominal version) and Direct Load electronics*
- Over-current protection – *Direct Load and PNP/PLC electronics*
- Short-circuit protection – *Direct Load and PNP/PLC electronics*
- Load-missing protection – *Direct Load and PNP/PLC electronics*
- Surge protection (to IEC61326) – *Available on all versions of the 2120*

Heartbeat LED

- The 2120 has a status-indicating heartbeat LED, which can be seen at all times and from all angles through a lens in the cover (no lens in metal housings).
- The LED flashes when the output is 'off' and is constantly lit when it is 'on'. The LED gives a constant indication that the 2120 is functioning correctly (different flash rates are used to indicate a product malfunction) and gives a local indication of the process state.

Magnetic test point

- A magnetic test point is located on the side of the housing, allowing a functional test of the 2120 and a system connected to it. By holding a magnet to the target, the 2120 output changes state for as long as the magnet is held there.

Terminal connection (wire diameter)

- Minimum 26 AWG, Maximum 14 AWG (0.13 to 2.5 mm^2). Note national regulations.

Grounding

- The 2120 must always be grounded either through the terminals or using the external ground connection provided.

Conduit plugs/cable gland

- Metal housing:
  Conduit entries for explosion-proof areas are shipped with one Exd plug (loose in bag) and two dust caps fitted. Use suitably rated cable glands. Unused conduit entries must be sealed with a suitably rated blanking plug.

- Glass-filled nylon housing with direct load, PNP/PLC and IS electronics are shipped with one PA66[(1)] cable gland and one blanking plug.
- Glass-filled nylon housing with relay electronics are shipped with two PA66[(1)] cable glands.

Electrical connections

- Direct load switching (mains two wire) cassette

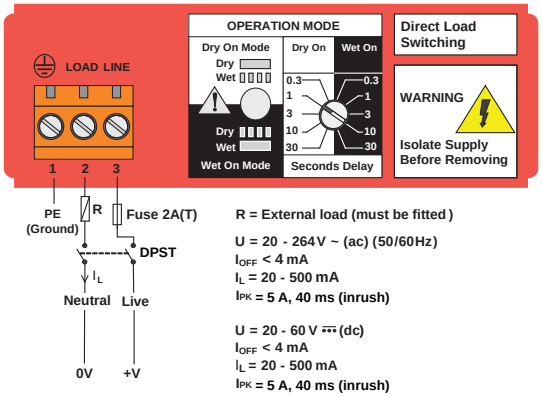

- NAMUR (light blue) cassette

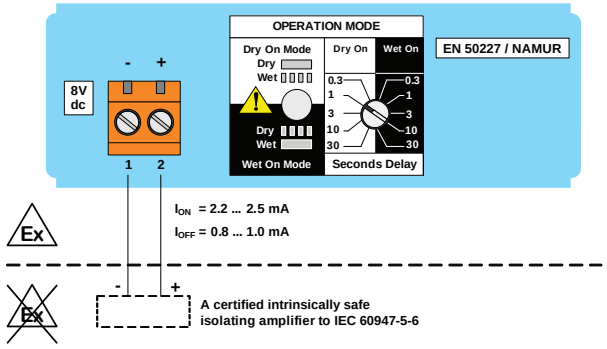

- 8/16 mA (dark blue) cassette

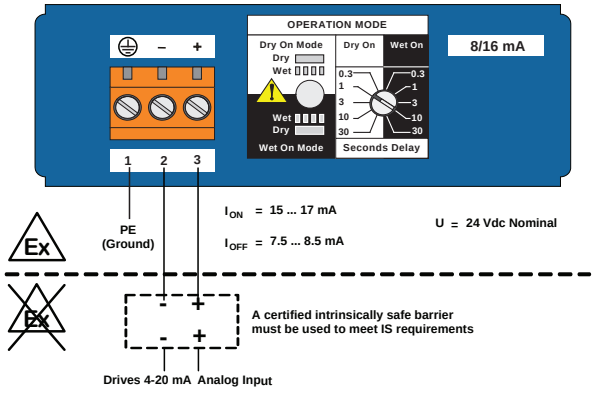

- DPCO dual relay cassette (standard version)

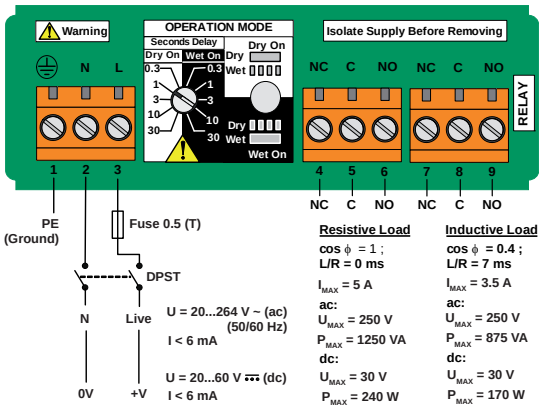

- DPCO dual relay cassette (12 Vdc nominal version)

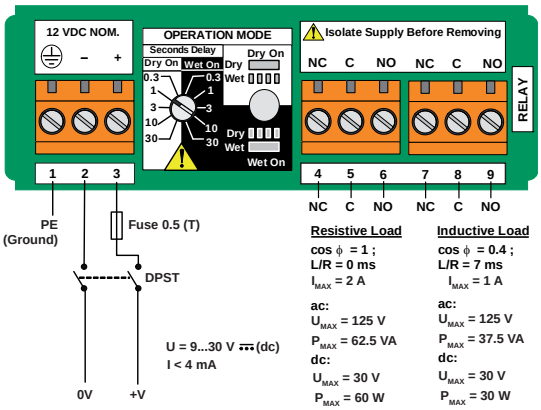

- Solid state PNP output for direct interface to a PLC

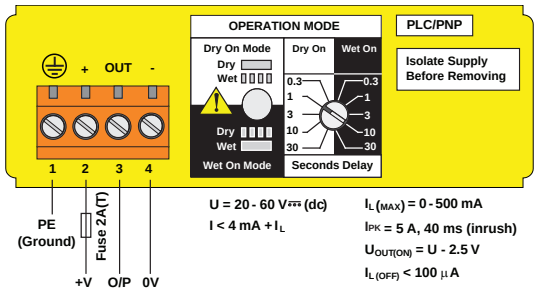

Note
The external DPST switch that is shown in the wiring diagrams is an optional local disconnect (customer supplied).

(1) Cable diameter 0.2 to 0.3 in. (5 to 8 mm)

Product Certifications

European directive information

The EC declaration of conformity for all applicable European directives for this product can be found on the Rosemount website at www.rosemount.com.

ATEX directive (94/9/EC)

Complies with the ATEX Directive.

Pressure equipment directive (PED) (97/23/EC)

The Rosemount 2120 is outside the scope of PED Directive.

Low voltage directive (LVD)

EN61010-1 Pollution degree 2, Category II (264 V maximum), Pollution degree 2, Category III (150 V maximum)

Electro magnetic compatibility (EMC) directive

EN61326 Emissions to Class B.
Immunity to industrial location requirements.
NAMUR NE21.

CE-mark

Complies with applicable directives (EMC, ATEX, and LVD).

NAMUR approval

NAMUR NE95 type test is available upon request.
Complies with NAMUR NE21.

Overfill approval

Certificate: Z-65.11-522.
TÜV-tested and approved for overfill protection according to the German DIBt/WHG regulations. Certified under safety devices for tanks and piping related to water pollution control.

Marine approvals

ABS American Bureau of Shipping

GL Germanischer Lloyd

SRS Russian Maritime Registered Shipping (RMRS)

Drinking water approval

Rosemount Measurement Limited, Slough, UK confirms that the wetted parts of the Rosemount type 2120 vibrating level switches are suitable and approved for use in potable water.

The wetted parts of the vibrating level switches executed in:

Stainless steel (option code D) and Alloy C / Alloy C-276 (option code C) with Flanged, NPT thread, BSPT(R) thread, or Tri-clamp process connections, are in accordance with the requirements of DVGW*- Worksheet W270.The materials used are classified as toxicologically and microbiologically free.

Ordinary location certification for FM

G5 Project ID: 3021776

The switch has been examined and tested to determine that the design meets basic electrical, mechanical, and fire protection requirements by FM, a nationally recognized testing laboratory (NRTL) as accredited by the Federal Occupational Safety and Health Administration (OSHA)

Ordinary location certification for CSA

G6 Certificate Number: 06 CSA 1805769

The switch has been examined and tested to determine that the design meets basic electrical, mechanical, and fire protection requirements by CSA, a nationally recognized testing laboratory as accredited by the Standards Council of Canada (SCC). **Single seal**

Technical Regulation Customs Union (EAC), ordinary locations mark

GM Contact an Emerson Process Management representative for additional information.

Korean Testing Laboratory (KTL), KCC mark for ordinary locations use

GP EMC Certificate: KCC-REM-ERN-RMDSWIT2120XXX

Safety Integrity Level (SIL) certification

The Rosemount 2120 is SIL2-certified, and is also SIL3 capable. It has been independently certified to IEC 61508 as required by IEC 61511. Certification was conducted by Exida.
If required, add "**QT**" to the end of the model code.
For example, 2120 D 0A K E1 X A0000 **QT**.

Canadian Registration Number

CRN 0F04227.2C

Note
The requirements of CRN are met when a Rosemount 2120 CSA-approved (G6, E6, or I6 codes) vibrating fork level switch model is configured with 316/316L stainless steel (1.4401/1.4404) wetted parts and either NPT threaded or 2 to 8-in. ASME B16.5 flanged process connections.

Hazardous locations certifications

North american approvals

Factory Mutual (FM) explosion-proof approval

E5 Project ID: 3012658
Explosion-proof for Class I, Div. 1, Groups A, B, C, and D
Temperature Class: T6 (T_{amb} –40 to 75 °C)
Enclosure: Type 4X

Factory Mutual (FM) intrinsically safe approval and non-incendive

I5 Project ID: 3011456
Intrinsically Safe for Class I, Div. 1, Groups A, B, C, and D
Class I, Zone 0, AEx ia IIC
Non-incendive for Class I, Div. 2, Groups A, B, C, and D
Class I, Zone 2, IIC
Temperature Code: T5 (T_{amb} –40 to 80 °C, Tproc < 80 °C)
Control Drawing: 71097/1154 (*with NAMUR electronics*)
Control Drawing: 71097/1314 (*with 8/16 mA electronics*)

Note
A certified isolating amplifier or barrier must be used for intrinsic safety.

Canadian approvals

Canadian Standards Association (CSA) explosion-proof

E6 Project ID: 1786345
Explosion-proof for Class I, Div. 1, Groups A, B, C, and D
Temperature Class: T6 (T_{amb} –40 to 75 °C)
Enclosure: Type 4X
Single seal

Canadian Standards Association (CSA) intrinsically safe and non-incendive

I6 Certificate Number: 06 CSA 1786345
Intrinsically Safe for Class I, Div. 1, Groups A, B, C, and D
Class 1, Zone 0, Ex ia IIC
Non-Incendive for Class I, Div. 2, Groups A, B, C, and D
Temperature Code: T5 (T_{amb} –40 to 80 °C, Tproc < 80 °C)
Control Drawing: 71097/1179 (*with NAMUR electronics*)
Control Drawing: 71097/1315 (*with 8/16 mA electronics*)
Single seal

Note
A certified isolating amplifier or barrier must be used for intrinsic safety.

European approvals

ATEX flameproof and dust-proof approval

E1 Certificate: Sira 05ATEX1129X
Flameproof and dust-proof:
ATEX Marking ⟨Ex⟩ II 1/2 G D
Ex d IIC T6...T2 Ga/Gb
Ex tb IIIC T85 °C...T265 °C Db

ATEX intrinsically safe approval

I1 Certificate: Sira 05ATEX2130X
Intrinsic Safety for gas and dust environments:
ATEX Marking ⟨Ex⟩ II 1 G D
Ex ia IIC T5...T2 Ga
Ex ia IIIC T85 °C...T265 °C Da

Note
A certified isolating amplifier or barrier must be used for intrinsic safety.

International approvals

National Supervision and Inspection Centre for Explosion Protection and Safety Instrumentation (NEPSI) flameproof and dust-proof

E3 Certificate Number: GYJ11.1705X
Flameproof and dust-proof:
Ex d IIC T6...T3 Ga/Gb
DIP A21 Ta T85°C to 160°C IP6X

National Supervision and Inspection Centre for Explosion Protection and Safety Instrumentation (NEPSI) intrinsically safe

I3 Certificate Number: GYJ11.1704X
(*NAMUR electronics only*)
Intrinsic Safety:
Ex ia IIC T5...T3 Ga
DIP A21 Ta T85°C to T155°C IP6X

Note
A certified isolating amplifier or barrier must be used for intrinsic safety.

INMETRO flameproof and dust-proof approval

E2 Certificate Number: TÜV 12.1285 X
Flameproof and dust-proof:
Ex d IIC T6 to T1 Ga/Gb, Ex tb IIIC T85 °C to T265 °C Db

INMETRO intrinsically safe approval

I2 Certificate Number: TÜV 12.1391 X
Intrinsically Safe for gas and dust environments:
Ex ia IIC T* Ga, Ex ia IIIC T* Da (* See table in the certificate)
Ta* (* See table in the certificate)

Note
A certified isolating amplifier or barrier must be used for intrinsic safety.

International Electrotechnical Commission (IEC) flameproof and dust-proof approval

E7 Certificate: IECEx SIR 06.0051X
Flameproof and dust-proof:
Ex d IIC T6...T2 Ga/Gb
Ex tb IIIC T85°C...T265°C Db

International Electrotechnical Commission (IEC) intrinsically safe approval

I7 Certificate: IECEx SIR 06.0070X
Intrinsically Safe for gas and dust environments:
Ex ia IIC T5...T2 Ga
Ex ia IIIC T85 °C...T265 °C Da

KTL/KOSHA flameproof approval

EP Certificates:
13-KB4BO-0144X (SMMC, Singapore) or
13-KB4BO-0298X (Rosemount Measurement Ltd., UK)
(depends on the manufacturing location)

Zone 0/1 Ex d IIC T6...T3
Ta (see table in the certificate)

KTL/KOSHA intrinsically safe approval

IP Certificates:
13-KB4BO-0143X (SMMC, Singapore) or
13-KB4BO-0297X (Rosemount Measurement Ltd., UK)
(depends on the manufacturing location)

Ex ia IIC T5...T3
Ta (see table in the certificate)

Note
A certified isolating amplifier or barrier must be used for intrinsic safety.

Technical Regulation Customs Union (EAC) approvals

EM Certificate: RU C-GB.ГБ06.B.00072

Flameproof:
1Exd IIC T6...T3 X
Ta (see table in the certificate)

(Contact an Emerson Process Management representative for additional information).

IM Certificate: RU C-GB.ГБ06.B.00072

Intrinsic Safety:
0Exia IIC T5...T3 X
Ta (see table in the certificate)

(Contact an Emerson Process Management representative for additional information).

Dimensional Drawings

3/4 and 1-in. threaded mounting (standard length) . . . . . page 15
3/4 and 1-in. thread mounting (extended length) . . . . . page 16
2-in. thread mounting . . . . . page 17
Flange mounting (standard length) . . . . . page 18
Flange mounting (extended length) . . . . . page 19
Mobrey 'A' and 'G' flanges . . . . . page 20

3/4 and 1-in. threaded mounting (standard length)

Glass-filled Nylon Housing

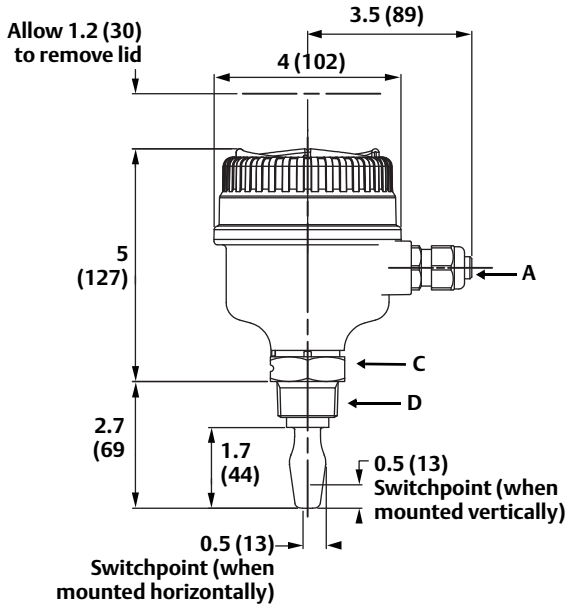

Aluminum/Stainless Steel Housing

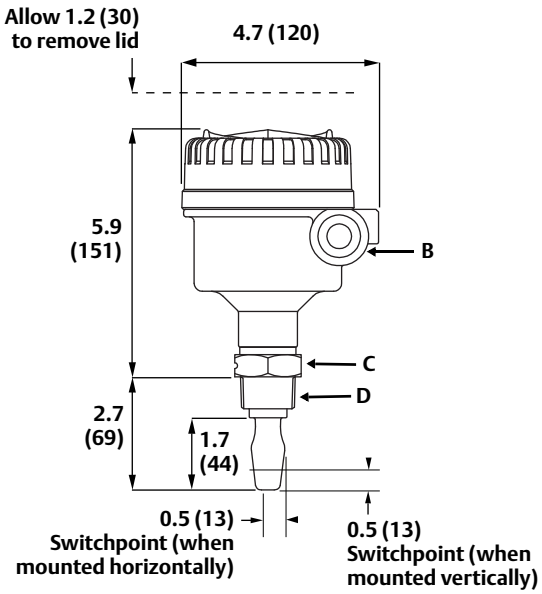

A. Cable Entry M20x1.5 or 1/2-in. ANPT
B. Cable Entry M20x1.5 or 3/4-in. ANPT
C. 1.6 (40) A/F Hexagon
D. 3/4-in. or 1-in. Thread

Note
Dimensions are in inches (millimeters).
For Hygienic 2120 dimensions, see Type 1 drawing downloads on www.rosemount.com.

3/4 and 1-in. thread mounting (extended length)

Glass-filled Nylon Housing

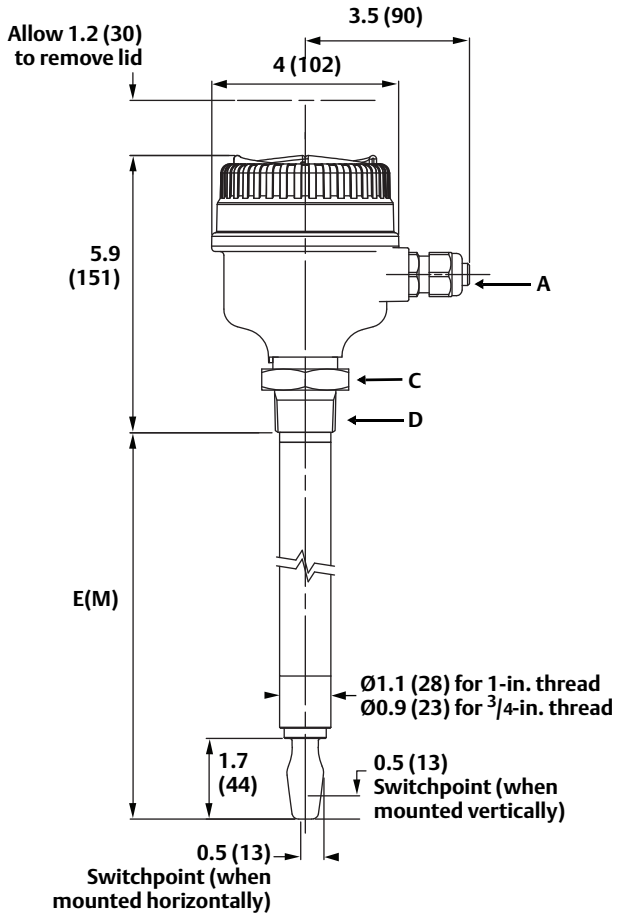

Aluminum/Stainless Steel Housing

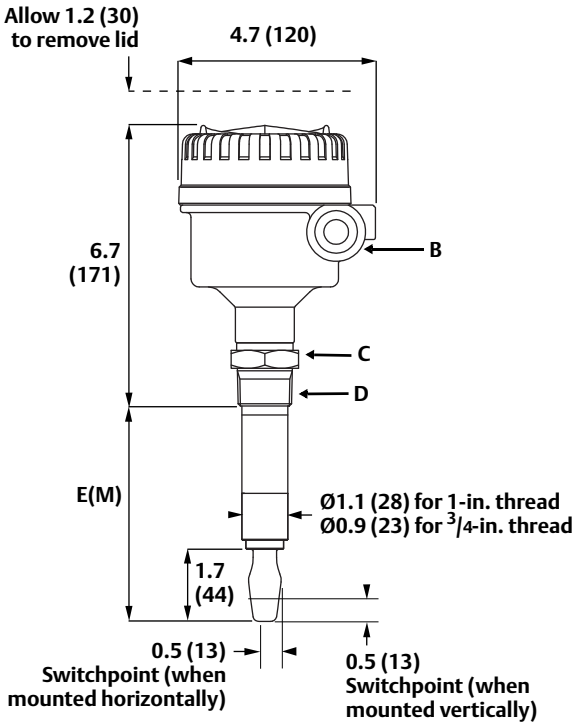

A. Cable Entry M20x1.5 or 1/2-in. ANPT
B. Cable Entry M20x1.5 or 3/4-in. ANPT
C. 1.6 (40) A/F Hexagon
D. 3/4-in. or 1-in. Thread

Note
Dimensions are in inches (millimeters).
For Hygienic 2120 dimensions, see Type 1 drawing downloads on www.rosemount.com.

Table 6. Fork length for 3/4 and 1-in. threaded 2120

Process Connection	Standard Length Fork Length Code A	Minimum Length Fork Length Code E (M)	Maximum Length Fork Length Code E (M)(1)
3/4-in. Thread	1.7 in. (44 mm)	3.75 in. (95 mm)	157.5 in. (4000 mm)
1-in. Thread	1.7 in. (44 mm)	3.74 in. (94 mm)	157.5 in. (4000 mm)

(1) Maximum extended length of fork with hand-polished option is 39.4 in. (1000 mm).

2-in. thread mounting

Glass-filled Nylon Housing

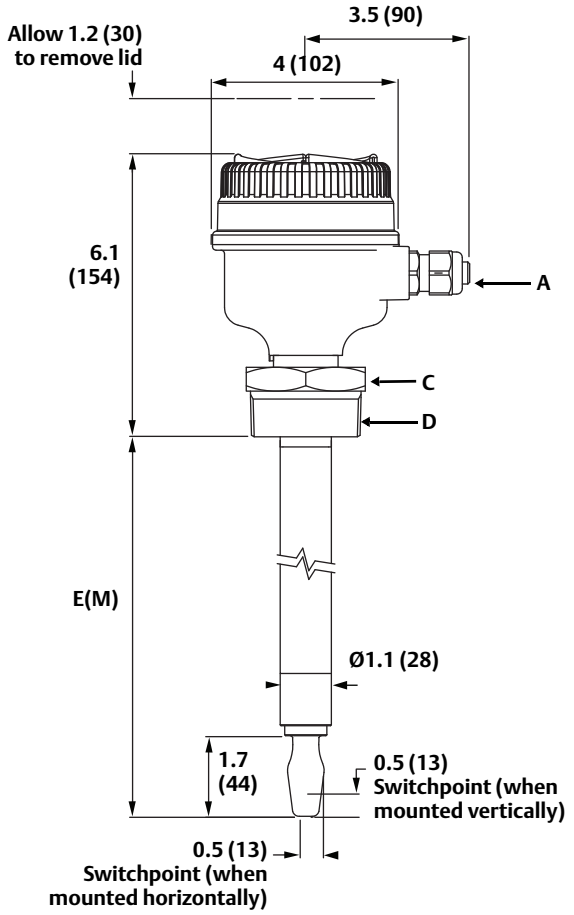

Aluminum/Stainless Steel Housing

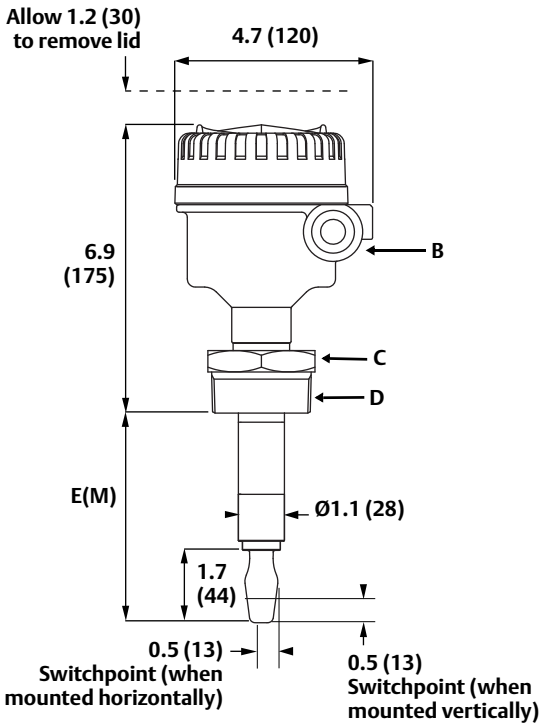

A. Cable Entry M20x1.5 or $^{1}/_{2}$-in. ANPT
B. Cable Entry M20x1.5 or $^{3}/_{4}$-in. ANPT
C. 2.6 (65) A/F Hexagon
D. 2-in. Thread

Note
Dimensions are in inches (millimeters).

Table 7. Fork length for 2-in. threaded 2120

Process Connection	Minimum Length Fork Length Code E (M)	Maximum Length Fork Length Code E (M)
2-in. Thread	3.74 in. (94 mm)	157.5 in. (4000 mm)

Flange mounting (standard length)

Glass-filled Nylon Housing

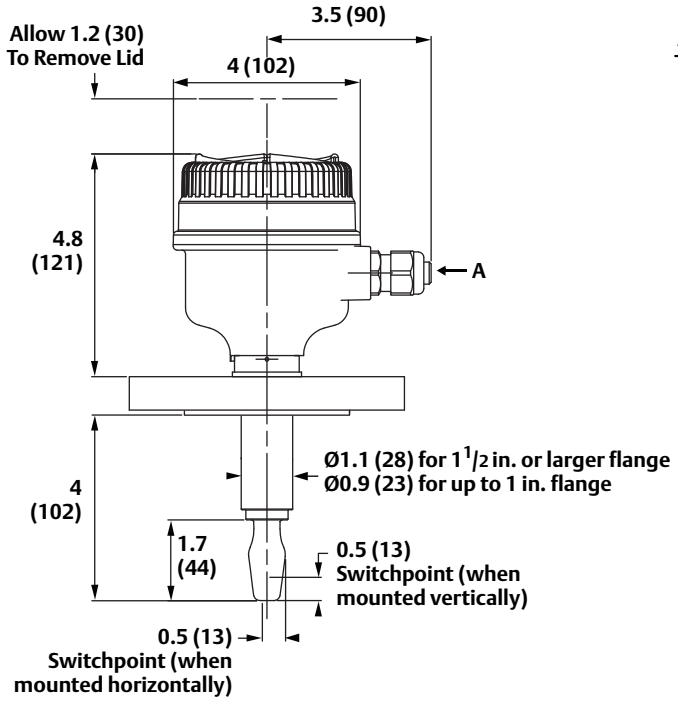

Aluminum/Stainless Steel Housing

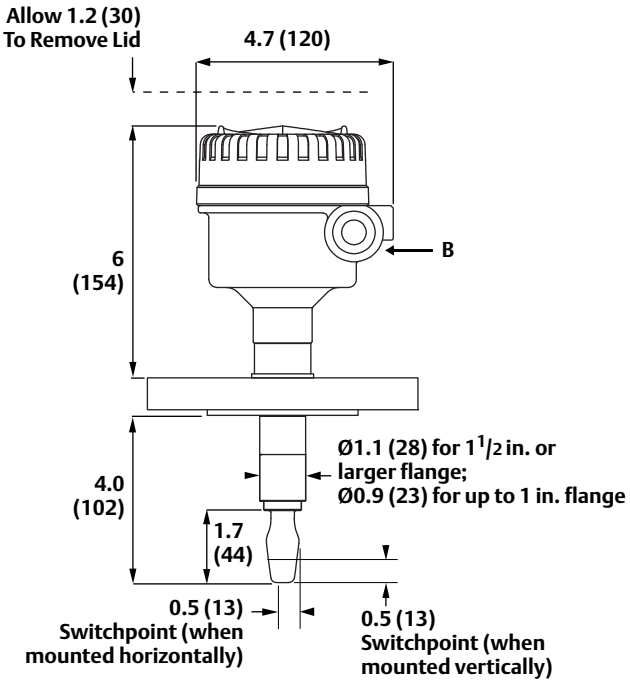

A. Cable Entry M20x1.5 or 1/2-in. ANPT
B. Cable Entry M20x1.5 or 3/4-in. ANPT

Note
Dimensions are in inches (millimeters).

Flange mounting (extended length)

Glass-filled Nylon Housing

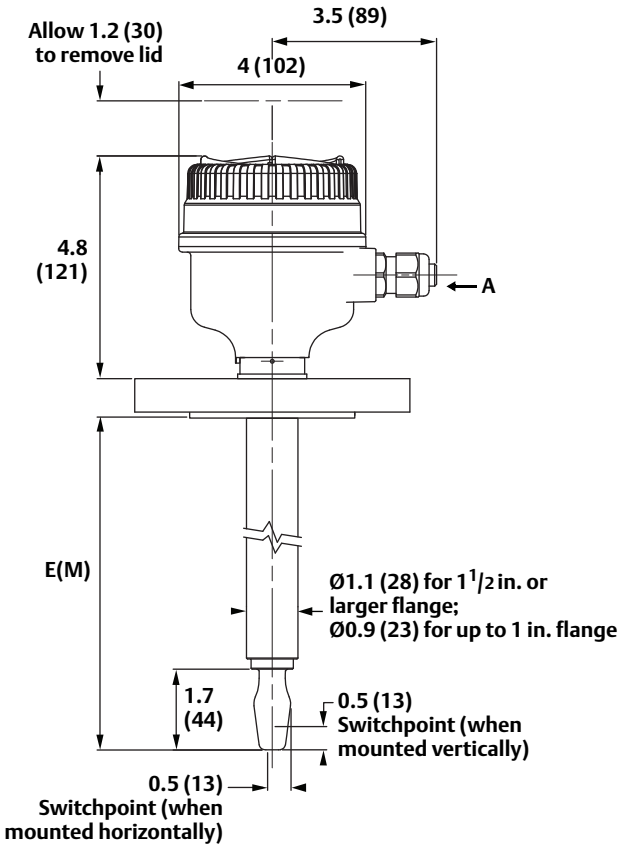

Aluminum/Stainless Steel Housing

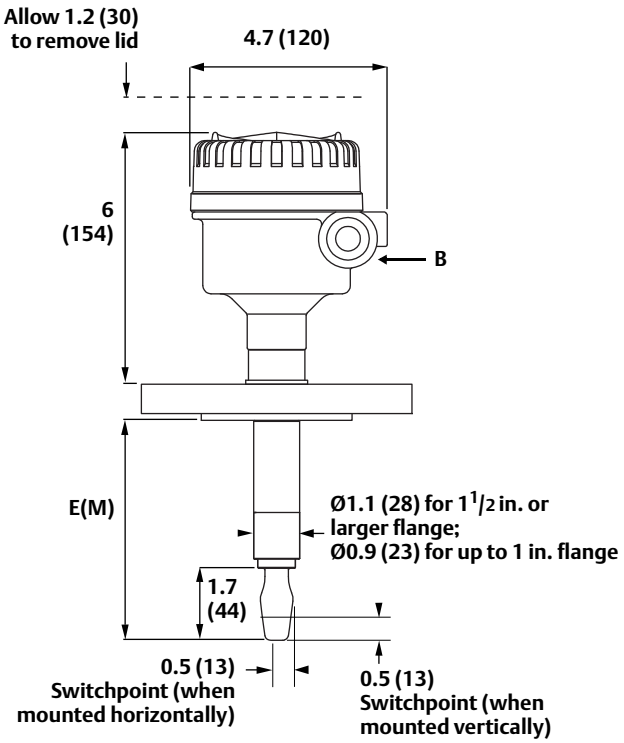

A. Cable Entry M20x1.5 or 1/2-in. ANPT
B. Cable Entry M20x1.5 or 3/4-in. ANPT

Note
Dimensions are in inches (millimeters).

Table 8. Fork length for flanged 2120

Process Connection Material	Standard Length Model Code H	Minimum Length Model Code E (M)	Maximum Length Model Code E (M)
Stainless steel(1)	4 (102)	3.5 (89)	157.5 (4000)
ECTFE/PFA co-polymer coated	4 (102)	3.5 (89)	59.1 (1500)
Alloy C and Alloy C-276	4 (102)	3.5 (89)	157.5 (4000)

(1) Maximum extended length of fork with hand-polished option is 39.4 in. (1000 mm).

Mobrey ‘A’ and ‘G’ flanges

Mobrey ‘A’ flange

4 off Ø0.55 (Ø14) holes equi-spaced on 3.62 (92) PCD

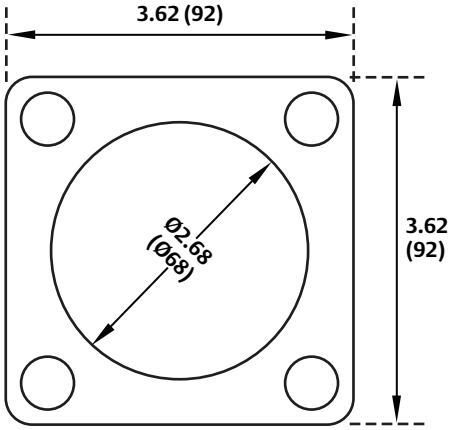

Mobrey 'G' flange

4 off Ø0.55 (Ø14) holes equi-spaced on 3.97 (98.4) PCD

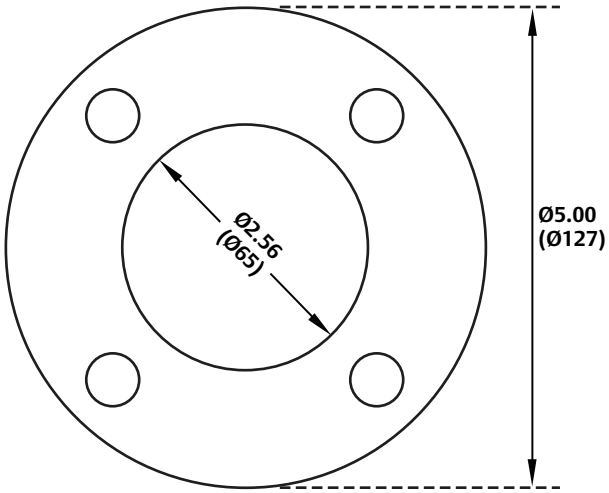

Note
Dimensions are in inches (millimeters).

Rosemount World Headquarters
Emerson Process Management
6021 Innovation Blvd
Shakopee, MN 55379, USA
+1 800 999 9307 or +1 952 906 8888
+1 952 949 7001
RFQ.RMD-RCC@EmersonProcess.com

North America Regional Office
Emerson Process Management
8200 Market Blvd.
Chanhassen, MN 55317, USA
+1 800 999 9307 or +1 952 906 8888
+1 952 949 7001
RMT-NA.RCCRFQ@Emerson.com

Latin America Regional Office
Emerson Process Management
1300 Concord Terrace, Suite 400
Sunrise, Florida, 33323, USA
+1 954 846 5030
+1 954 846 5121
RFQ.RMD-RCC@EmersonProcess.com

Europe Regional Office
Emerson Process Management Europe GmbH
Neuhofstrasse 19a P.O. Box 1046
CH 6340 Baar
Switzerland
+41 (0) 41 768 6111
+41 (0) 41 768 6300
RFQ.RMD-RCC@EmersonProcess.com

Asia Pacific Regional Office
Emerson Process Management Asia Pacific Pte Ltd
1 Pandan Crescent
Singapore 128461
+65 6777 8211
+65 6777 0947
Enquiries@AP.EmersonProcess.com

Middle East and Africa Regional Office
Emerson Process Management
Emerson FZE P.O. Box 17033,
Jebel Ali Free Zone - South 2
Dubai, United Arab Emirates
+971 4 8118100
+971 4 8865465
RFQ.RMTMEA@Emerson.com

Standard Terms and Conditions of Sale can be found at:
www.rosemount.com\terms_of_sale.
The Emerson logo is a trademark and service mark of Emerson Electric Co.
Rosemount and Rosemount logotype are registered trademarks of Rosemount Inc.
Mobrey is a registered trademark of Rosemount Measurement Ltd.
All other marks are the property of their respective owners.
© 2015 Rosemount Inc. All rights reserved.

ROSEMOUNT®

EMERSON™
Process Management