Type: LXPRC/S/RD

Phase Failure, Phase Sequence, Under and Over Voltage plus Restart Delay

Terminal Protection to IP20



Dims: to DIN 43880
W. 17.5mm

- ❑ ***NEW*** **17.5mm DIN rail housing**
- ❑ **Microprocessor based**
- ❑ **True R.M.S. monitoring**
- ❑ **Monitors own supply and detects if one or more phases exceed the fixed Under or Over voltage trip levels**
- ❑ **Measures phase to phase voltages**
- ❑ **Detects incorrect phase sequence and phase loss**
- ❑ **Selectable Nominal voltages (Un) – 2 voltage versions available**
- ❑ **Fixed Under and Over voltage trip levels (±10% of selected Nominal voltage)**
- ❑ **Adjustment for Restart delay (1 – 500 seconds)**
- ❑ **1 x SPDT relay output 8A**
- ❑ **Green LED indication for supply status**
- ❑ **Red LED indication for relay status**

ISO 9001:2015
Cert. No. 14125771

FUNCTION DIAGRAM

Under and Over Voltage Monitoring

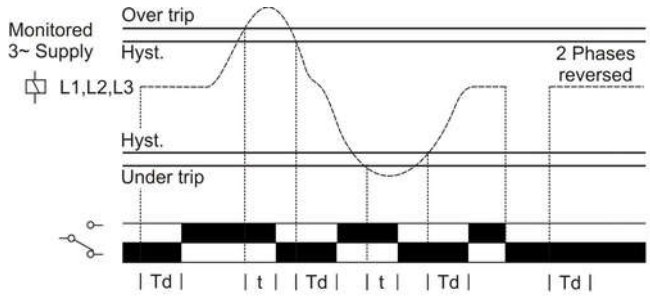

INSTALLATION AND SETTING

Installation work must be carried out by qualified personnel.

- BEFORE INSTALLATION, ISOLATE THE SUPPLY.
- Connect the unit as required. The Connection Diagram below shows a typical installation, whereby the supply to a load is being monitored by the Phase monitoring relay. If a fault should occur (i.e. fuse blowing), the relay will de-energise and assuming control of the external Contactor, de-energise the Contactor as well.

Setting the unit.

- Set the "Nominal Voltage (Un)" ❸ selector to match the voltage of the supply to be monitored.
- Set the "Restart Delay" ❹ to the desired position.

Applying power.

- Apply power and the green "Power supply" LED ❶ will illuminate. The red LED ❷ will flash for the duration that is set on the "Restart Delay" adjustment.
- After the set delay has elapsed, the relay will energise and contacts 15 and 18 will close. The red LED will now remain illuminated. Refer to the troubleshooting table if the unit fails to operate correctly.

Under / Overvoltage Fault condition.

- If the monitored supply voltage increases above the fixed over voltage or decreases below the fixed under voltage trip level, the relay will de-energise after delay "t". The red LED will extinguish when the relay de-energises.
- The relay will re-energise after the Restart Delay (Td) when the voltage either increases above the under voltage trip level plus the hysteresis or decreases below the over voltage trip level minus the hysteresis.

Troubleshooting.

The table below shows the status of the unit during/after a fault condition.

Supply fault	Green LED	Red LED	Relay
After power applied / fault cleared	On	Flashing	De-energised for set delay (Td)
Phase missing	On	Off	De-energised
Phases reversed (no delay)	Flashing	Off	De-energised
Under or Over Voltage condition (during delay "t")	On	On for delay (t)	Energised for delay (t)
Under or Over Voltage condition (after delay "t")	On	Off	De-energised
Phase below 70% of Un (fixed under trip level [2])	On	Off	De-energised

TECHNICAL SPECIFICATION

Selectable nominal voltages Un* **(L1, L2, L3):**	LV version: 200, 208, 220, 230, 240V AC Std version: 380[1], 400[1], 415[1], 440[1], 460V[1] AC		
Frequency range:	48 – 63Hz		
Supply variation limits:	LV: 146 – 286V AC Std: 266 – 540V AC		
Overvoltage category:	III (IEC 60664)		
Rated impulse withstand voltage:	[1]4kV (1.2/50µS) IEC 60664		
Power consumption (max.):	8VA		
Monitoring mode:	Under and Over voltage		
Trip levels: Under:	90% of Un (fixed)		
Over:	110% of Un (fixed)		
Trip voltages for select Nominal:			
Nominal	Under	Over	
200V:	180V	220V	
208V:	187V	229V	
220V:	198V	242V	
230V:	207V	253V	
240V:	216V	264V	
380V:	342V	418V	
400V:	360V	440V	
415V:	374V	457V	
440V:	396V	484V	
460V:	414V	506V	
Trip level accuracy:	± 2%		
Hysteresis:	≈ 2% of trip level (factory set)		
Repeat accuracy:	± 0.5% at constant conditions		
Immunity from micro power cuts:	<50mS		
Response time:	≈ 50mS		
Time delay (t):	4 sec. (± 5%) *Note: actual delay (t) = time delay + response time*		
Restart delay (Td):	1 – 500 sec.		
Setting accuracy:	± 3%		
Delay from Phase loss (tr):	≈ 1 sec. (worst case = tr x 2)		
Power on indication:	Green LED		
Relay status indication:	Red LED		
Ambient temp:	-20 to +70°C (Supply voltage not to exceed 264V AC (LV version) or 480V AC (Std version). If voltage above this, derate max. ambient temperature to +60°C)		
Relative humidity:	+95%		
Output **(15, 16, 18)**:	SPDT relay		
Output rating:	AC1	250V 8A (2000VA)	
	AC15	250V 5A (no), 3A (nc)	
	DC1	25V 8A (200W)	
Electrical life:	≥ 150,000 ops at rated load		
Dielectric voltage:	2kV AC (rms) IEC 60947-1		
Rated impulse withstand voltage:	4kV (1.2/50µS) IEC 60664		
Housing:	Grey flame retardant UL94		
Weight:	75g		
Mounting option:	On to 35mm symmetric DIN rail to BS EN 60715 or direct surface mounting via 2 x M3.5 or 4BA screws using the black clips provided on the rear of the unit.		
Terminal conductor size:	≤ 2 x 2.5mm² solid or stranded		
Approvals:	Conforms to IEC. UL LISTED IND. CONT. EQ. E111187 CE, UKCA, and RoHS Compliant. EMC: Immunity: EN 61000-6-2 (EN 61000-4-3 15V/m 80MHz - 2.7GHz). Emissions: EN 61000-6-4		

* Please state voltage variant when ordering

CONNECTION DIAGRAM

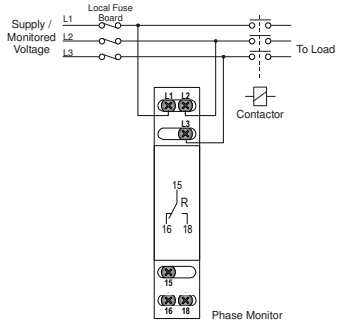

SETTING DETAILS

1. Power supply status (Green) LED
2. Relay output / Timing status (Red) LED
3. "Nominal Voltage (Un)" selector
4. "Restart Delay" adjustment^

^scale digits to be multiplied by 100 for actual delay (i.e. 2 x 100 = 200 seconds)

Front layout example shown for the 380 > 460V version.

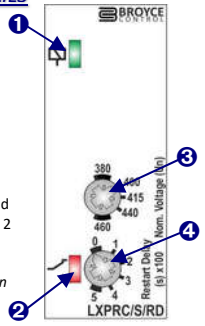

DIMENSIONS

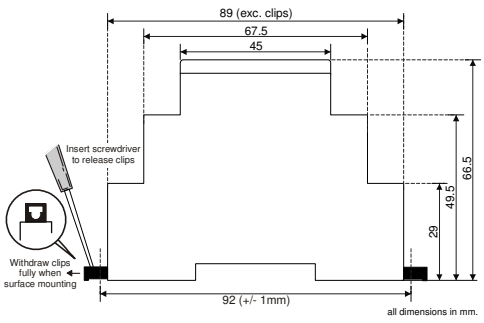

HS Code: 85364900
Country of Origin: UK

Broyce Control Ltd., Pool Street, Wolverhampton, West Midlands WV2 4HN. England
Tel: +44 (0) 1902 773746 Fax: +44 (0) 1902 420639 Email: sales@broycecontrol.com Web: www.broycecontrol.com

LXPRCS_RD-6-A
2301

he Information provided in this literature is believed to be accurate (subject to change without prior notice); however, use of such information shall be entirely at the user's own risk.