max. 9 m^3/h

DC axial fans

Series 400 F 40 x 40 x 10 mm

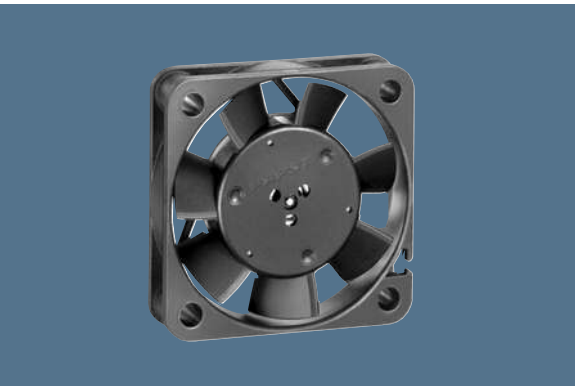

Highlights:
- Compact fan with low power consumption.
- Some models suitable for use at high ambient temperatures.

General characteristics:
- Material: fibreglass-reinforced plastic. impeller PA, housing PBT.
- Fully integrated electronic commutation.
- Protected against reverse polarity and locking.
- Connection via single strands AWG 28, TR 64. Bared and tin-plated.
- Air exhaust over struts. Direction of rotation counter-clockwise, seen on rotor.
- Mass: 17 g.

Nominal data	Air flow	Air flow	Nominal voltage	Voltage range	Sound pressure level	Sound power level	Sintec sleeve bearings / Ball bearings	Power input	Nominal speed	Temperature range	Service life L_{10} (20 °C) ebm-papst Standard / Service life (60 °C) ebm-papst Standard	Life expectancy L_{10} (40 °C) see P. 15	Curve	Specials
Type	m^3/h	CFM	VDC	VDC	dB(A)	Bel(A)	□ / ■	Watts	RPM	°C	Hours	Hours	P. 110	
405 F	8	4,7	**5**	4,5...5,5	22,1	4,4	□	0,7	5 400	-20...+70	45 000 / 15 000	47 500	2	/2
405 FH	9	5,3	**5**	4,5...5,5	26,0	4,6	□	0,9	6 000	-20...+70	45 000 / 15 000	47 500	3	/2
412 FM	6	3,5	**12**	10...14	16,5	3,8	□	0,6	4 300	-20...+70	45 000 / 15 000	47 500	1	
412 F	8	4,7	**12**	10...14	22,1	4,4	□	0,7	5 400	-20...+70	45 000 / 15 000	47 500	2	
412 FH	9	5,3	**12**	10...14	26,0	4,6	□	0,8	6 000	-20...+70	45 000 / 15 000	47 500	3	/2
414 F	8	4,7	**24**	20...28	22,1	4,4	□	0,8	5 400	-20...+70	45 000 / 15 000	47 500	2	/2
414 FH	9	5,3	**24**	21,6...26,4	26,0	4,4	□	0,9	6 000	-20...+70	45 000 / 15 000	47 500	3	
Models with temperature range up to +85 °C.														
412 FM-074	6	3,5	**12**	10...14	16,5	3,8	□	0,4	4 300	-20...+85	45 000 / 15 000	47 500	1	/2
412 F-130	8	4,7	**12**	10...14	22,1	4,4	□	0,6	5 400	-20...+85	45 000 / 15 000	47 500	2	
412 FH-132	9	5,3	**12**	10...14	26,0	4,6	□	0,7	6 000	-20...+85	45 000 / 15 000	47 500	3	/2

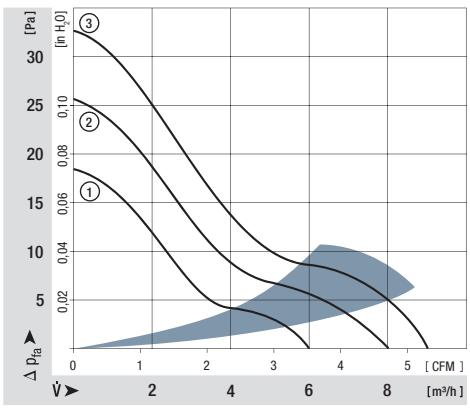

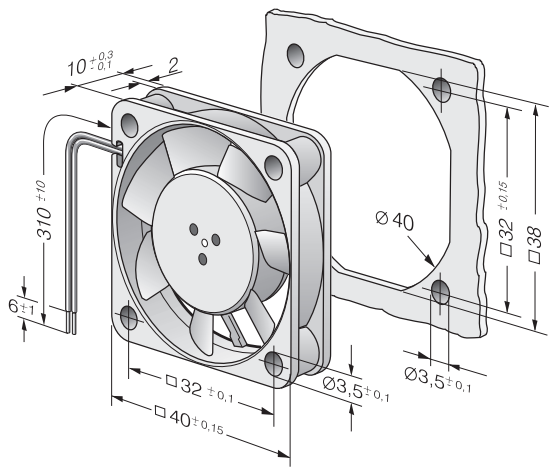

ebmpapst