

PMD relays for electrical safety and PNOZ relays for functional safety

pilz
the spirit of safety

Configuration guide
for electronic monitoring relays PMDsigma, PMDsrange
and safety relays PNOZsigma, PNOZ X

Technical Catalogue 3.1 – April 2013 edition






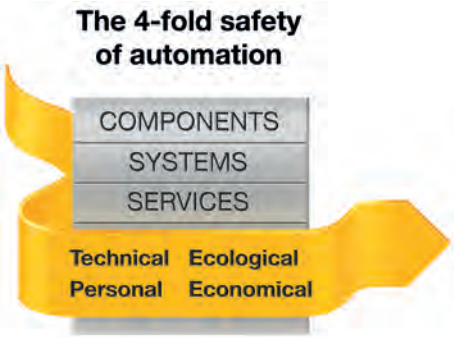

Total customer proximity

Pilz has a tradition as a family-run company stretching back over 60 years. Real proximity to customers is visible in all areas, instilling confidence through individual consultation, total flexibility and reliable service. Worldwide, round the clock, in 28 subsidiaries and branch offices.

Benefit-oriented innovations

Our customer proximity is the basis for our innovative strength. We are always oriented towards current market requirements, which is why we can offer innovative automation solutions in every case. Market leadership in safe automation secures our leadership in research and technology. Customer proximity and innovation belong together and are mutually dependent.

Overall solutions

Pilz is your solution supplier for all automation functions. Including standard control functions. Pilz developments protect man, machine and the environment. Our automation solutions incorporate our knowledge and experience from the stringent demands of safety technology, as well as the sum of our knowledge gained from over 60 years' experience of general automation technology.



All our experience and knowledge go into individual products and sophisticated system solutions.

- Sensor technology
- Control technology
- Networks
- Drive technology
- Operator and visualisation systems
- Software
- Automation system PSS 4000
- Consulting and engineering
- Training

the spirit of safety

With their knowledge, enthusiasm, creativity and courage to take the unconventional route, our staff have made us what we are today: one of the leading brands in automation technology.

More than 1 500 staff, each one of them an ambassador for safety, make sure that your company's most valuable asset – your staff – can work safely and free from injury.

Exclusion of liability

Our technical catalogue has been compiled with great care. It contains information about our company and our products. All statements are made in accordance with the current status of technology and to the best of our knowledge and belief. While every effort has been made to ensure the information provided is accurate, we cannot accept liability for the accuracy and entirety of the information provided, except in the case of gross negligence. In particular, all information on applicable standards, safety-related classifications and time characteristics should be viewed as provisional. Information in this catalogue does not have the legal quality of assurances or assured properties. We are grateful for any feedback on the contents of this operating manual.

December 2011

All rights to this publication are reserved by Pilz GmbH & Co. KG. We reserve the right to amend specifications without prior notice. Copies may be made for internal purposes. The names of products, goods and technologies used in this manual are trademarks of the respective companies.

Contents

Relays for electrical safety	1.0
Electronic monitoring relays PMDsigma	1.1
Electronic monitoring relays PMDsrange	1.2
Relays for functional safety	2.0
Selection guide	2.1
Safety relays PNOZ X	2.2
Safety relays PNOZsigma	2.3
Order reference	3.0
Order reference	3.1
Standards and directives	4.0
Standards and directives	4.1
Service	5.0
Service	5.1

Pilz GmbH & Co. KG, Felix-Wankel-Straße 2, 73760 Ostfildern, Germany
Telephone: +49 711 3409-0, Telefax: +49 711 3409-133, E-Mail: pilz.gmbh@pilz.de

Contents	Page
Electronic monitoring relays PMDsigma	from 1.1-1
Electronic monitoring relays PMDsrange	from 1.2-1

Pilz GmbH & Co. KG, Felix-Wankel-Straße 2, 73760 Ostfildern, Germany
Telephone: +49 711 3409-0, Telefax: +49 711 3409-133, E-Mail: pilz.gmbh@pilz.de

Electronic monitoring relays PMDsigma

Contents		Page
Electronic monitoring relays PMDsigma		
True power monitoring		
	PMD s10	1.1-2
Insulation monitoring		
	PMD s20	1.1-11

True power monitoring
PMD s10



True power converter for single and three-phase electrical machinery

Approvals

	PMD s10
c UL us LISTED	◆

Unit features

- Relay output:
  2 auxiliary changeover contacts (C/O)
- Analogue output for current and voltage
- Galvanic isolation of the analogue outputs
- Measuring range set automatically for current and voltage
- Menu-driven parameter setting
- Status indicators (LEDs) for:
  – Supply voltage (Power)
  – Switching threshold for overload (> max)
  – Switching threshold for underload (< min)
  – Output 1 (Out 1)
  – Output 2 (Out 2)
  – Fault
- Display for measured value indicator, diagnostics and menu navigation
- Operating cycle counter for K1 and K2
- Diagnostics: U_{max} and I_{max}
- Display of operating hours and load hours (resettable)
- Device parameters can be saved to chip card (write)
- Device parameters can be restored from the chip card (load)
- Suitable for use with frequency-controlled drives
- Suitable for current transformers

Unit description

The true power converter PMD s10 is used to measure and monitor the true power drawn and output by electrical loads.
The PMD s10 is designed for use as a:

- True power converter for single and three-phase electrical machines
- Trip device for underload and overload

Block diagram

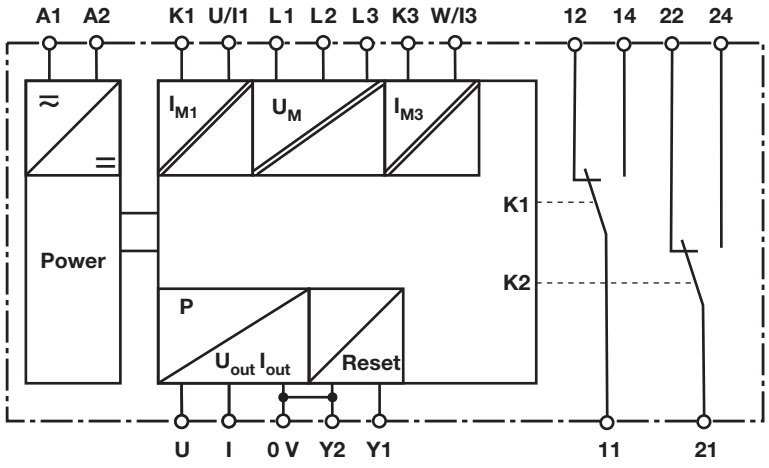

Pilz GmbH & Co. KG, Felix-Wankel-Straße 2, 73760 Ostfildern, Germany
Telephone: +49 711 3409-0, Telefax: +49 711 3409-133, E-Mail: pilz.gmbh@pilz.de

1001844-EN-02-2010-11

True power monitoring
PMD s10

Function description

The PMD s10 monitors the true power on a single, three phase or DC supply to ensure it doesn't exceed or drop below a certain value. The unit operates in accordance with the Aron circuit principle.

Relay outputs (K1 and K2)
K1 and K2 operate in normally energised mode. In their default state, auxiliary contacts 11-14 and 21-24 are closed and auxiliary contacts 11-12 and 21-22 are open. Normally energised mode is the default setting; this setting can be changed via the menu.

Analogue outputs (U_{out} and I_{out}):
The unit forms two output signals which are proportional to the true power. The limit value corresponds to P_{max} (see timing diagram). The status of the threshold monitoring function is displayed at the auxiliary contacts and LEDs, along with the analogue output signals. The hysteresis of the switching thresholds can be set between 0 % ... 50 %.

Current transformer CT:
With continuous currents > 12 A, the measuring current must be measured via an external current transformer.

Po function (K1 overload):
If the measured true power exceeds the switching threshold Po, the "> max" LED is lit. Once the response time has elapsed (t_r), the auxiliary contact switches (default: relay K1) and the "Out 1" LED is lit.

Pwo function (overload warning threshold):
Serves as a warning; for function description, see Po function (K1 overload)

Pu function (K2 underload):
If the measured true power drops below the switching threshold PU, the "< min" LED is lit. Once the response time has elapsed (t_r), the auxiliary contact switches (default: relay K2) and the "Out 2" LED is lit.

Pwu function (underload warning threshold):
Serves as a warning; for function description, see Pu function (K2 underload)

Start suppression time (t_{Start}):
The measurement is suppressed during the machine's start-up phase, in order to avoid spurious output signals. The start suppression time t_{Start} is infinitely variable.

Response time (t_r):
With transient load fluctuations, the switching threshold can be suppressed. The response time t_r is infinitely variable.

Reset mode:
The fault status (value below Pu or above Po) can be reset automatically or via an external reset button.

Timing diagram

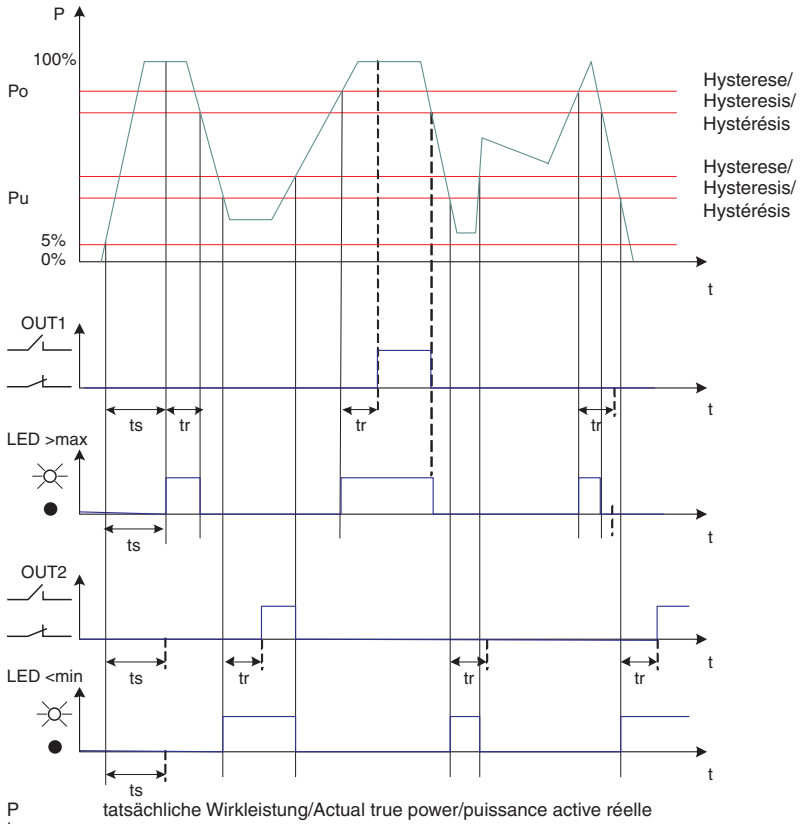

P tatsächliche Wirkleistung/Actual true power/puissance active réelle
t_s Startunterdrückungszeit/Start suppression time/Temps de suppression au démarrage
t_r Reaktionszeit/Response time/Temps de résponse

True power monitoring
PMD s10

Timing diagram

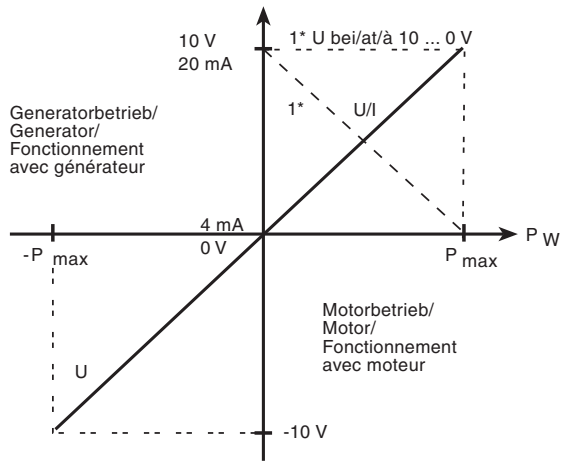

P tatsächliche Wirkleistung/Actual true power/puissance active réelle
U/I analoges Ausgangssignal, Spannung oder Strom/Analogue output signal, voltage or current/ signal de sortie analogique, intensité ou tension

Wiring

Note:
- Only wire the unit when the supply voltage is switched off!
- Use copper wiring.
- To prevent contact welding, a fuse should be connected before the output contacts (see technical details).
- Ensure that the cables are laid carefully, because an open circuit in the measuring circuit will cause the unit function to fail.
- Information given in the “Technical details” must be followed.

NOTICE
Ensure that there is adequate fuse protection on the connection cables to terminals L1, L2, L3, K1, K3, A1 and A2!

Preparing for operation

- Connect the supply voltage UB to A1/A2.
- Single-phase:
  - Measuring voltage U_M: Connect to terminals L1 and L2
  - Link terminals L1-K1
  - Measuring circuit: Connect phase L1 of the motors to terminal U/I1
- Three-phase:
  - Measuring voltage U_M: Connect to terminals L1, L2 and L3
  - Link terminals L1-K1, L3-K3
  - Measuring circuit: Connect phase L1 of the motor to terminal U/I1, phase L2 to terminal L2 and L3 to W/I3
- Please refer to the connection diagrams for details of how to connect **external current transformers** and an **external reset** (see "Application").
- Connect the output contacts in accordance with the relevant application circuit.

NOTICE
Only connect the unit as shown in the examples below! Do not connect unlabelled terminals.

The following circuit examples show typical applications for the true power converter PMD s10.
With continuous currents > 12 A, the measuring current must be measured via an external current transformer.

Pilz GmbH & Co. KG, Felix-Wankel-Straße 2, 73760 Ostfildern, Germany
Telephone: +49 711 3409-0, Telefax: +49 711 3409-133, E-Mail: pilz.gmbh@pilz.de

True power monitoring
PMD s10

Circuit for three-phase motor

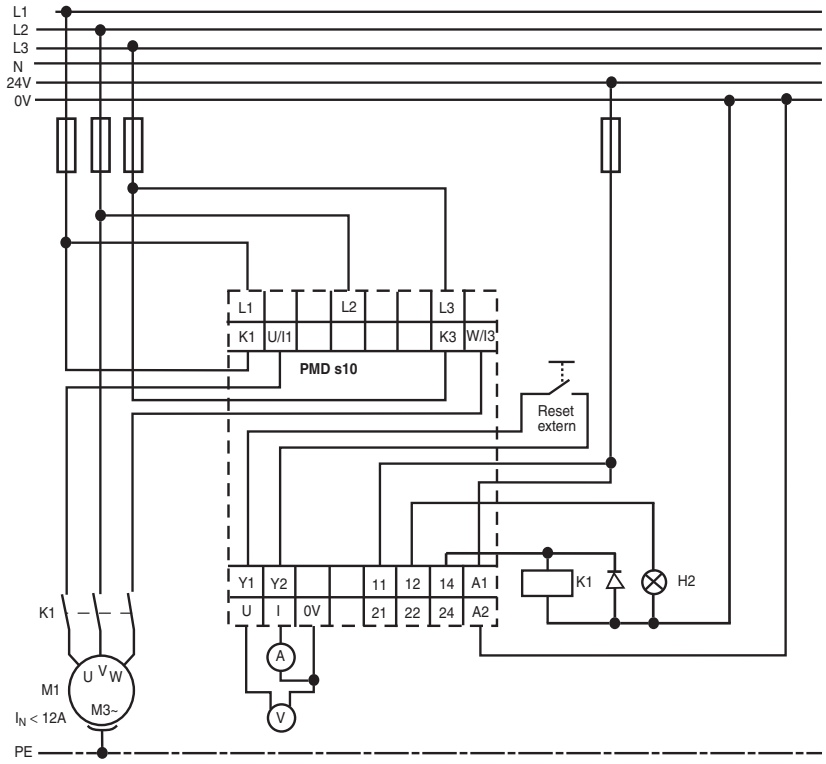

True power monitoring
PMD s10

Circuit for three-phase motor with CT

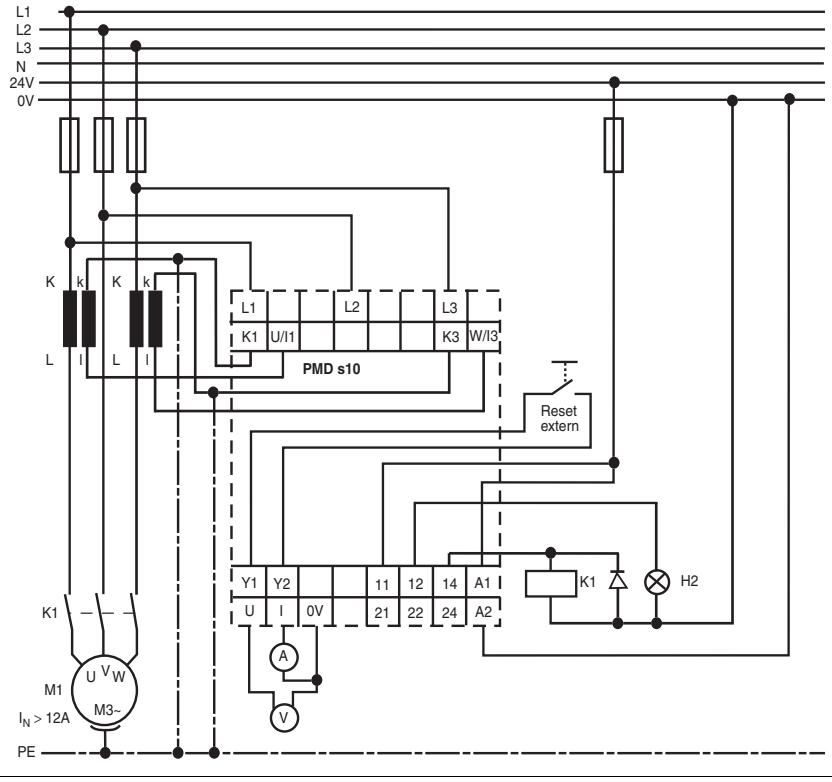

Pilz GmbH & Co. KG, Felix-Wankel-Straße 2, 73760 Ostfildern, Germany
Telephone: +49 711 3409-0, Telefax: +49 711 3409-133, E-Mail: pilz.gmbh@pilz.de

True power monitoring
PMD s10

Circuit for motor (1 AC)

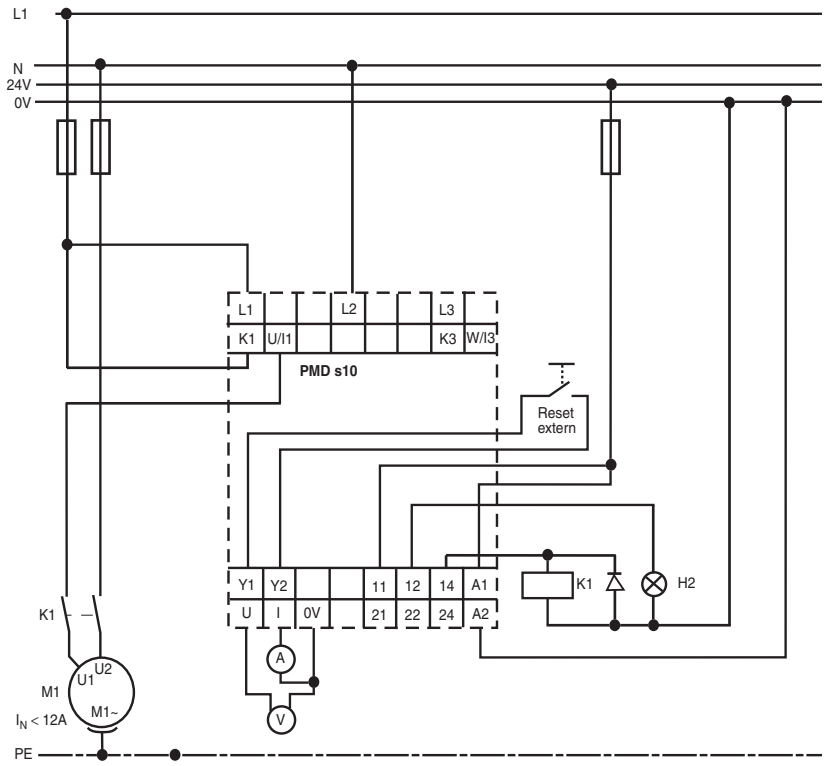

True power monitoring
PMD s10

Circuit for motor (1 AC) with CT

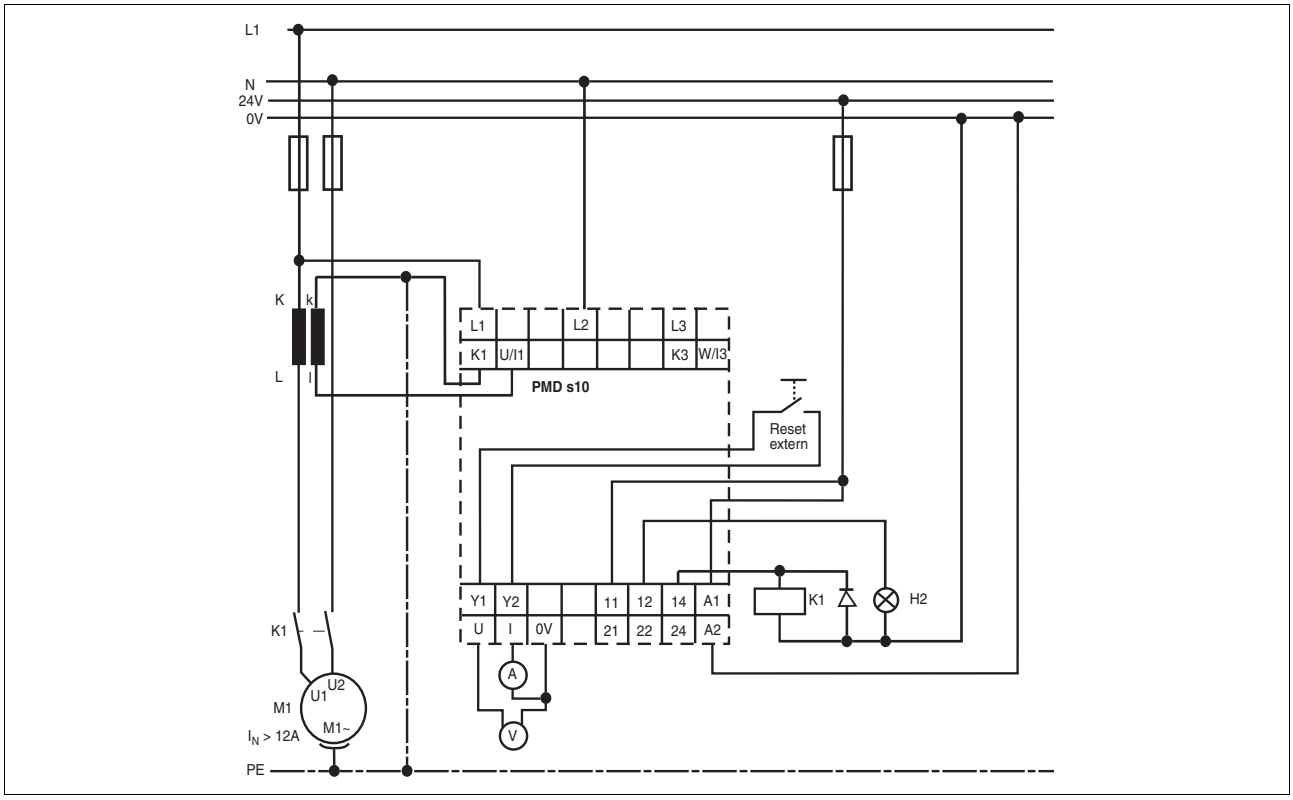

Parameter setting

Parameters such as switching thresholds, start-up suppression time, reaction time and rest mode, for example, are set via a rotary knob.

A display indicates the current values plus the set values.
The parameters can be saved on a chip card. This chip card can be used as a bakkup copy of the parameters or can be used to transfer the parameters to another unit.

Installation

- The unit should be installed in a control cabinet with a protection type of at least IP54.
- Use the notch on the rear of the unit to attach it to a mounting rail.
- In environments exposed to heavy vibration or when installing on a vertical mounting rail (35 mm), the unit should be secured using a fixing element (e.g. retaining bracket or end angle).
- Push the unit upwards or downwards before lifting it from the mounting rail.

Pilz GmbH & Co. KG, Felix-Wankel-Straße 2, 73760 Ostfildern, Germany
Telephone: +49 711 3409-0, Telefax: +49 711 3409-133, E-Mail: pilz.gmbh@pilz.de
1001844-EN-02-2010-11

True power monitoring
PMD s10

Notice

This data sheet is only intended for use during configuration. Please refer to the operating manual for installation and operation.

Technical details	
Electrical data	
Supply voltage U_B AC/DC	**24 - 240 V**
Voltage tolerance	**-20 %/+10 %**
Power consumption at U_B AC	**5.0 VA**
Power consumption at U_B DC	**3.0 W**
Frequency range AC	**50 - 60 Hz**
Utilisation category in accordance with **EN 60947-4-1**	
Auxiliary contacts: AC1 at **240 V**	I_{min}: **0.10 A** , I_{max}: **5.0 A** P_{max}: **1200 VA**
Auxiliary contacts: DC1 at **24 V**	I_{min}: **0.10 A** , I_{max}: **5.0 A** P_{max}: **120 W**
Utilisation category in accordance with **EN 60947-5-1**	
Auxiliary contacts: AC15 at **230 V**	I_{max}: **5.0 A**
Auxiliary contacts: DC13 at **24 V** (6 cycles/min)	I_{max}: **2.0 A**
Contact material	**AgNi10**
External contact fuse protection (I_K = 1 kA) to **EN 60947-5-1**	
Blow-out fuse, quick	
Auxiliary contacts:	**6 A**
Blow-out fuse, slow	
Auxiliary contacts:	**4 A**
Circuit breaker 24 VAC/DC, characteristic B/C	
Auxiliary contacts:	**4 A**
Safety-related characteristic data	
PL in accordance with **EN ISO 13849-1: 2006**	**PL c** (**Cat. 1**)
Category in accordance with **EN 954-1**	**Cat. 1**
SIL CL in accordance with **EN IEC 62061**	**SIL CL 1**
PFH in accordance with **EN IEC 62061**	**6.05E-07**
SIL in accordance with **IEC 61511**	**SIL 1**
PFD in accordance with **IEC 61511**	**5.30E-02**
T_M [year] in accordance with **EN ISO 13849-1: 2006**	**20**
Times	
Typ. response time of analogue output at DC	**20 ms**
Response time of analogue output at 15 ... 60 Hz	**70 - 16 ms**
Response time of analogue output at 60 ... 400 Hz	**16 ms**
Response time t_r of auxiliary contact (selectable)	**0.01 - 30.00 s**
Start suppression time t_{start} (selectable)	**0.0 - 30.0 s**
Measuring circuit	
Measuring voltage U_M (AC/DC)	**100 - 550 V**
Measuring current I_M (AC/DC)	**1 - 12 A**
Frequency range	**0, 15 - 400 Hz**
Measuring range limit value (selectable)	**1.0 W - 11.5 kW**
Measuring range limit value P_{max} with external current transformer	**100.0 W - 11.5 MW**
Performance range of 1 A current transformer	**1.5 - 7.5 VA**
Performance range of 5 A current transformer	**2.5 - 15.0 VA**
Current transformer class	**3**
Max. measuring current AC/DC	**12 A**
Temperature coefficient	**0.10 %/K**

True power monitoring
PMD s10

Output signals with motor operation	
Output voltage U_{out} 0... 10 V	**0 - 10 V**
Output voltage U_{out} 10 ... 0 V	**10 - 0 V**
Terminating impedance (apparent ohmic resistance) R_{out} min.	**1 kOhm**
Output current I_{out} 4 ... 20 mA	**4 - 20 mA**
Output current I_{out} 0 ... 20 mA	**0 - 20 mA**
Terminating impedance (apparent ohmic resistance) R_{out} max.	**0.5 kOhm**
Output signals with generator operation	
Output voltage U_{out}	**0 - -10 V**
Terminating impedance (apparent ohmic resistance) R_{out} min.	**1 kOhm**
Output current I_{out}	**0 - -20 mA**
Terminating impedance (apparent ohmic resistance) R_{out} max.	**0.5 kOhm**
Environmental data	
EMC	**EN 61000-6-2**, **EN 61000-6-4**
Vibration to **EN 60068-2-6**	
Frequency	**10 - 55 Hz**
Amplitude	**0.35 mm**
Climatic suitability	**EN 60068-2-78**
Airgap creepage in accordance with	**IEC 60664-1**
Pollution degree	**2**
Overvoltage category	**III**
Rated insulation voltage	**300 V**
Rated impulse withstand voltage	
Measuring circuit	**6.0 kV**
Supply voltage, auxiliary contacts, analogue output	**4.0 kV**
Ambient temperature	**-10 - 55 °C**
Storage temperature	**-25 - 85 °C**
Protection type	
Mounting (e.g. cabinet)	**IP54**
Housing	**IP40**
Terminals	**IP20**
Mechanical data	
Housing material	
Housing	**PC**
Front	**PC**
Cross section of external conductors with screw terminals	
1 core flexible	**0.25 - 2.50 mm² , 24 - 12 AWG** No. 760100
with crimp connectors, without insulating sleeve	**0.25 - 1.00 mm² , 24 - 16 AWG** No. 760100
without crimp connectors or with TWIN crimp connectors	**0.20 - 1.50 mm² , 24 - 16 AWG** No. 760100
Torque setting with screw terminals	**0.50 Nm** No. 760100
Cross section of external conductors with spring-loaded terminals: Flexible with/without crimp connectors	**0.20 - 2.50 mm² , 24 - 12 AWG** No. 761100
Stripping length	**9 mm** No. 761100
Dimensions	
Height	**100.0 mm** No. 761100 **98.0 mm** No. 760100
Width	**45.0 mm**
Depth	**120.0 mm**
Weight	**370 g**

Order reference

Type	Features	Terminals	Order no.
PMD s10	24 - 240 VAC/DC	With screw terminals	760 100
PMD s10 C	24 - 240 VAC/DC	With cage clamp terminals	761 100

Pilz GmbH & Co. KG, Felix-Wankel-Straße 2, 73760 Ostfildern, Germany
Telephone: +49 711 3409-0, Telefax: +49 711 3409-133, E-Mail: pilz.gmbh@pilz.de

Insulation monitoring
PMD s20



The insulation monitor monitors the insulation resistance of unearthed AC/DC systems (IT systems). It meets the requirements of EN 61557-8, IEC 60364-7-710 and DIN VDE 0100-710.

Approvals

	PMD s20
c UL us LISTED	◆

Unit features

- Relay output:
  2 auxiliary changeover contacts (C/O)
- Detects symmetrical and asymmetrical insulation faults
- Two insulation measuring circuits
- Connection for external switch contacts to trigger the manual reset and for function testing
- Unit parameter settings are menu-driven and infinitely variable via a display and rotary encoder with key function (turn and push)
- Configuration is stored on a chip card
- Status indicators (LEDs) for:
  – Supply voltage (Power)
  – Insulation resistance
  – Fault

Unit description

The insulation monitor monitors the insulation resistance of unearthed AC/DC systems (IT systems). It meets the requirements of EN 61557-8, IEC 60364-7-710 and DIN VDE 0100-710 and may be used:

- To monitor unearthed AC/DC systems (including on board ships)
- In medical locations
- As a trip device if insulation resistances are outside the permitted range

Block diagram

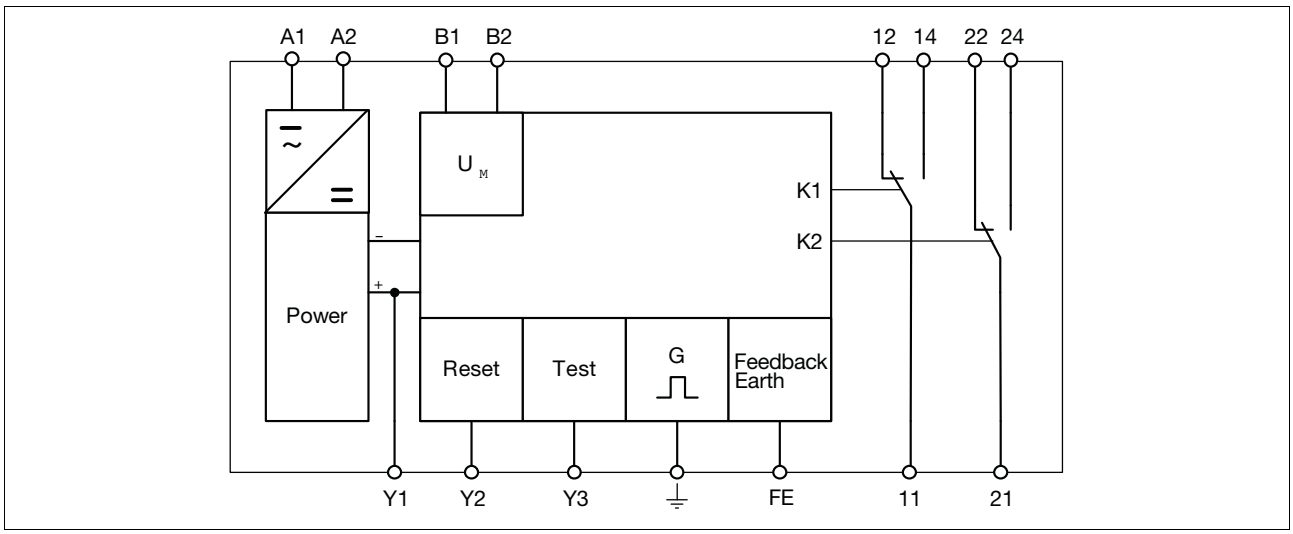

Insulation monitoring
PMD s20

Function description

The insulation monitor prevents hazardous insulation faults in galvanically separated systems. The insulation resistances are measured between the network phases and the operating earth. The measuring principle detects symmetrical and asymmetrical insulation faults.

Relay outputs (K1 and K2)

K1 and K2 operate in normally energised mode. In their default state, auxiliary contacts 11-14 and 21-24 are closed and auxiliary contacts 11-12 and 21-22 are open. Normally energised mode is the default setting; this setting can be changed via the menu.

Response resistance

If the insulation resistance falls below the set response resistance R_{an} in either of the two measuring circuits ($R_E < R_{an}$), the LED "Out 1" or "Out 2" will light and the relay contacts will de-energise.

- **Response resistance Ran1:** Auxiliary contacts 11-14 will open and auxiliary contacts 11-12 will close (normally energised mode).
- **Response resistance Ran2:** Auxiliary contacts 21-24 will open and auxiliary contacts 21-22 will close (normally energised mode).

Monitoring the operating earth

If the connection between the operating earth and the FE terminal is broken, contacts 11-12 and 21-22 will close (normally energised mode).

Timing diagram

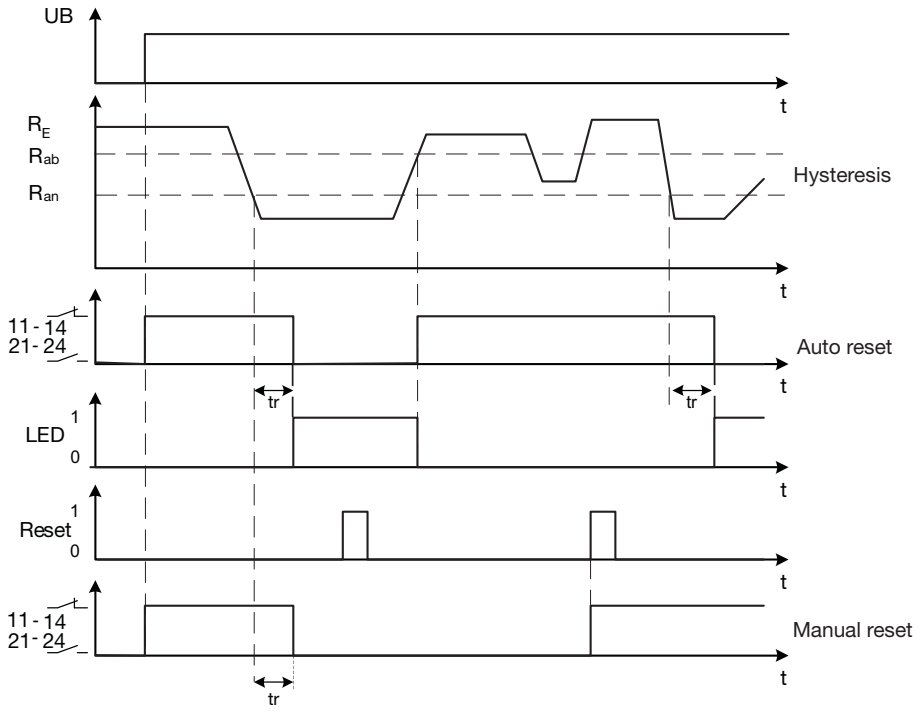

U_B = Versorgungsspannung/Supply voltage/Tension d'alimentation

R_{an} = Ansprechwert/Response value/Seuil de déclenchement

R_{ab} = Rücksetzwert/Release value/Valeur de réarment

R_E = Isolationswiderstand/Insulation resistance/Résistance de'isolement

Wiring

When commissioning, please note the following:

- Output contacts 11-12-14 and 21-22-24 are auxiliary contacts (e.g. for a display or contactor control)
- Only wire the unit when the supply voltage is switched off!
- Use copper wiring.
- To prevent contact welding, a fuse should be connected before the output contacts (see technical details).
- Ensure that the cables are laid carefully, because an open circuit in the measuring circuit will cause the unit to malfunction.
- Ensure there is adequate fuse protection on the connection cables at terminals B1 and B2.

Pilz GmbH & Co. KG, Felix-Wankel-Straße 2, 73760 Ostfildern, Germany
Telephone: +49 711 3409-0, Telefax: +49 711 3409-133, E-Mail: pilz.gmbh@pilz.de

Insulation monitoring
PMD s20

- Only **one** insulation monitor should be connected to galvanically connected systems.
- A function test involving a real earth fault (resistance) must be carried out in order to check that the unit is properly connected.
- Information given in the “Technical details” must be followed.

Preparing for operation

- Supply voltage UB:
  - Connect the supply voltage UB to A1/A2. The supply voltage UB can also be taken from the measuring circuit.
- Measuring circuit (system to be monitored):
  - 2-phase system:
  - Connect one phase of the monitored system to the terminals B1/B2 respectively.
  - 3-phase system:
  - Link terminals B1/B2 and connect them to the system's star point.
- Connect the output contacts in accordance with the relevant application circuit.
- **Function test**:
  - By pressing a button at terminals Y1 and Y3
    or
  - Pressing the rotary knob for at least 3 seconds

Please note:
Do not connect any cables to undesignated terminals.

Application circuit AC

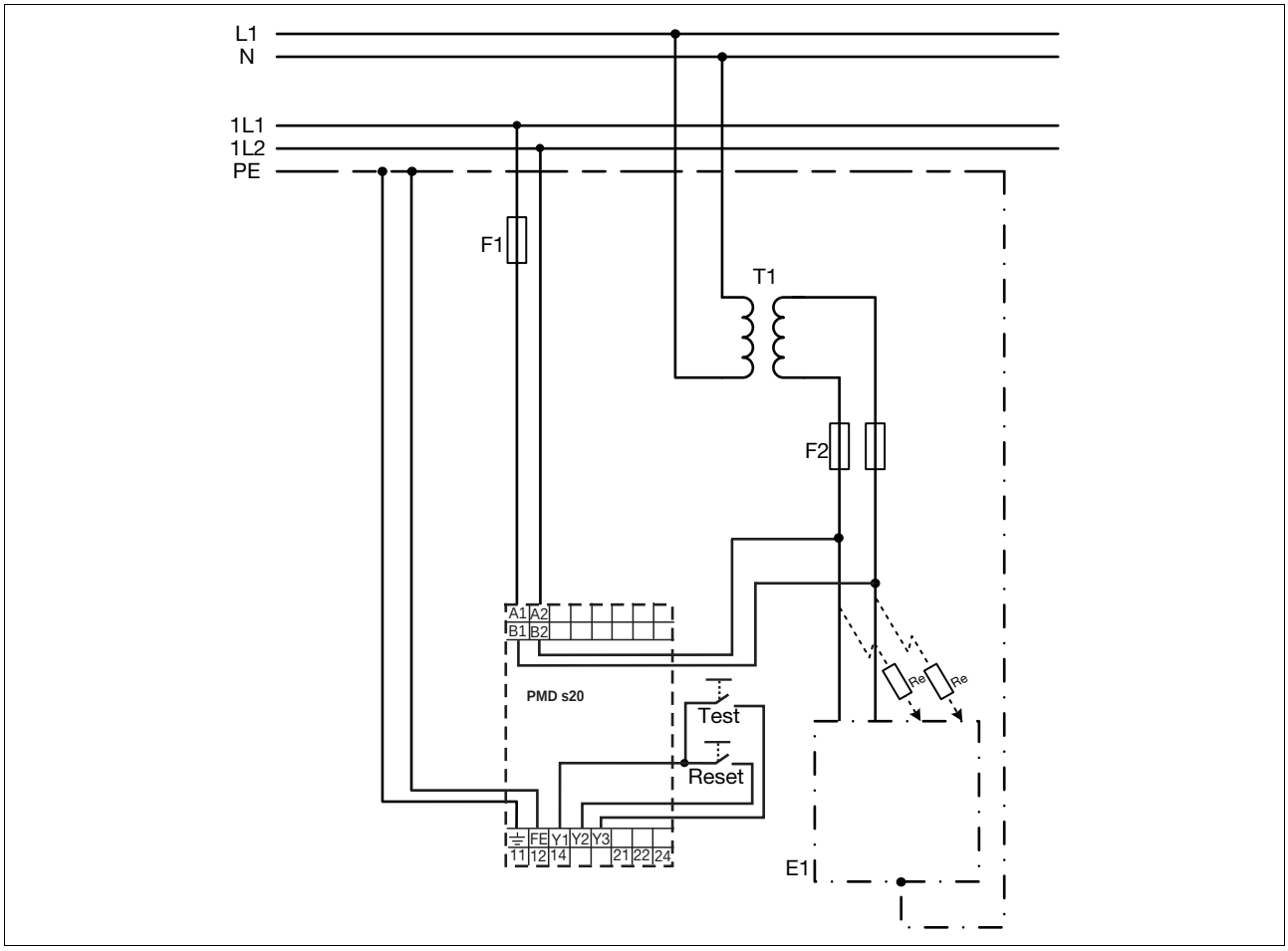

Insulation monitoring
PMD s20

Application circuit DC

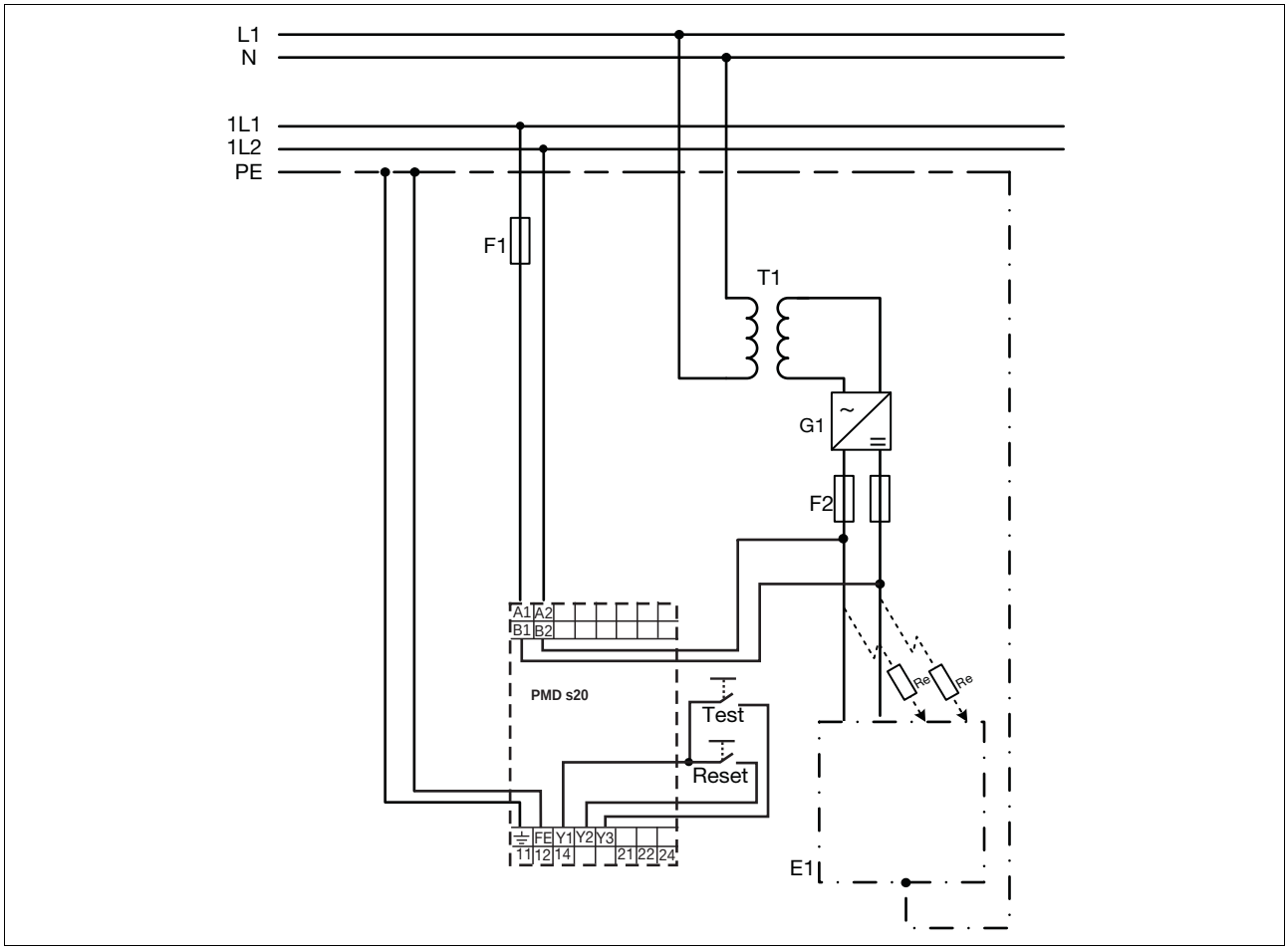

Pilz GmbH & Co. KG, Felix-Wankel-Straße 2, 73760 Ostfildern, Germany
Telephone: +49 711 3409-0, Telefax: +49 711 3409-133, E-Mail: pilz.gmbh@pilz.de

Insulation monitoring
PMD s20

Application circuit 3 AC

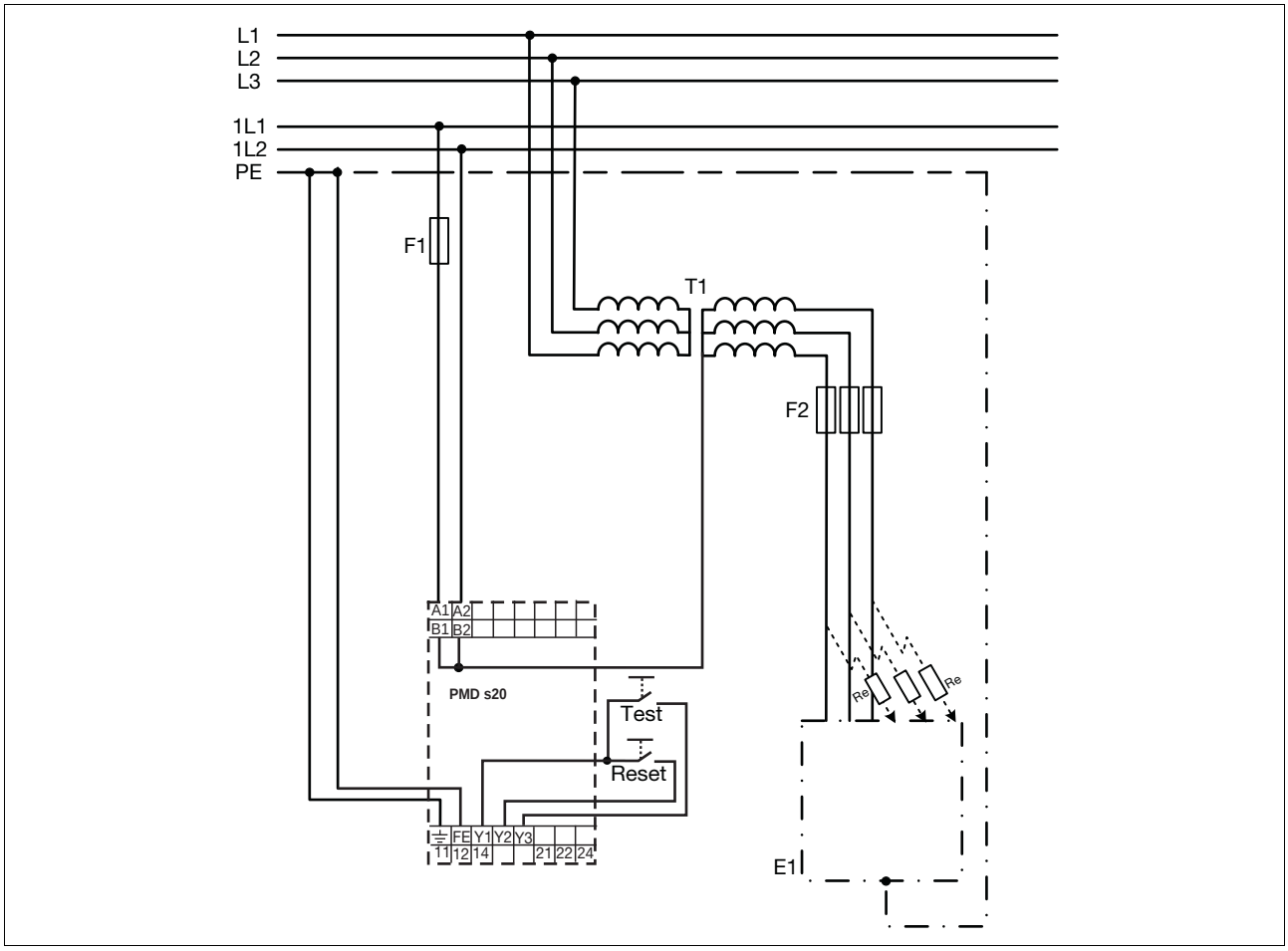

Insulation monitoring
PMD s20

Application circuit 3 AC/DC

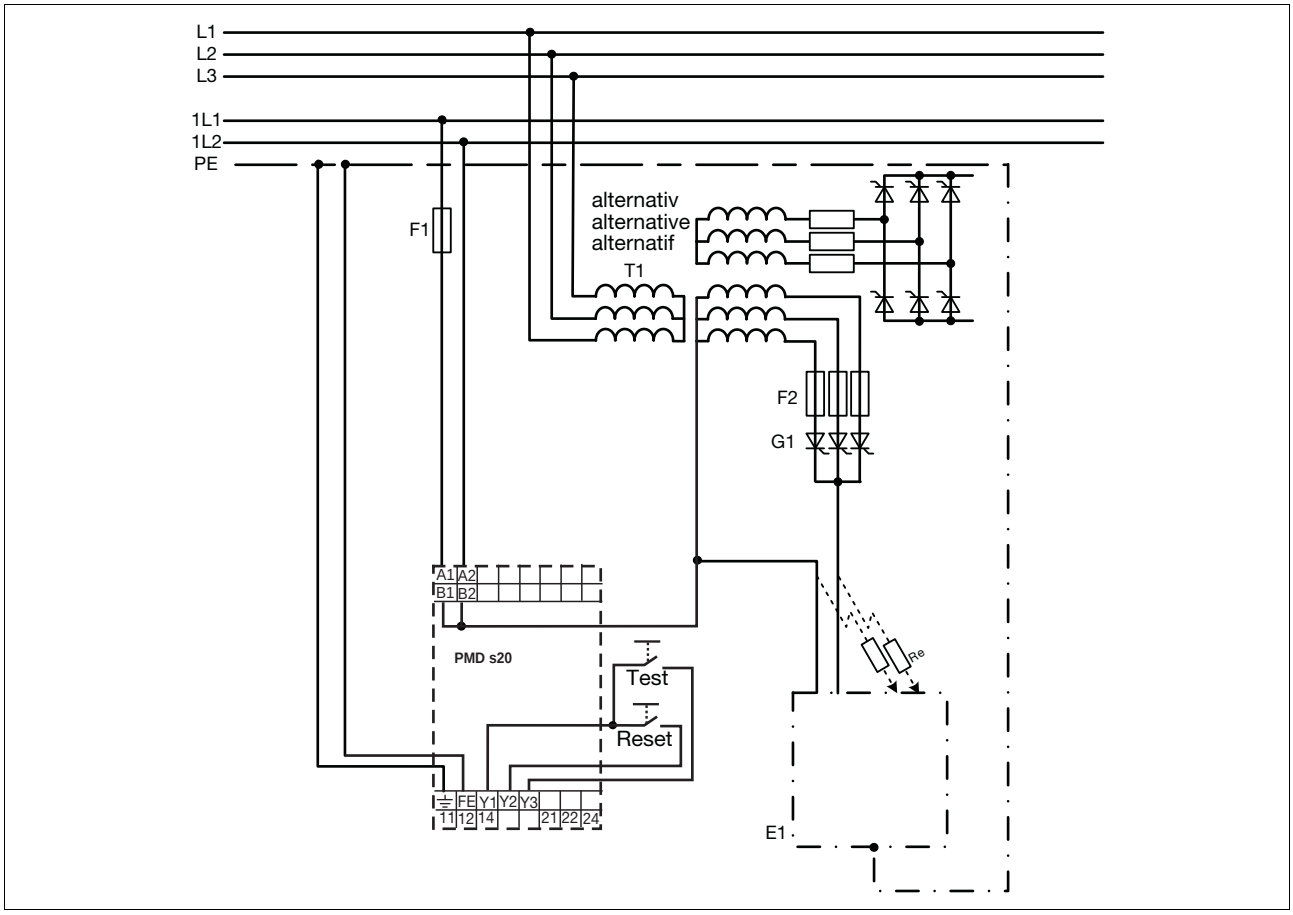

Parameter setting

The menu settings are made on the unit's display via a rotary knob. You have the option to make the settings on the knob by hand or with a screwdriver. If you make the settings with a screwdriver, the knob can remain within the unit.

Installation

- The unit should be installed in a control cabinet with a protection type of at least IP54.
- Use the notch on the rear of the unit to attach it to a mounting rail.
- In environments exposed to heavy vibration or when installing on a vertical mounting rail (35 mm), the unit should be secured using a fixing element (e.g. retaining bracket or end angle).
- Push the unit upwards or downwards before lifting it from the mounting rail.

Pilz GmbH & Co. KG, Felix-Wankel-Straße 2, 73760 Ostfildern, Germany
Telephone: +49 711 3409-0, Telefax: +49 711 3409-133, E-Mail: pilz.gmbh@pilz.de

Insulation monitoring
PMD s20

Notice

This data sheet is only intended for use during configuration. Please refer to the operating manual for installation and operation.

Technical details

Electrical data	
Supply voltage U_B AC/DC	**24 - 240 V**
Voltage tolerance	**-15 %/+10 %**
Power consumption at U_B AC	**5.0 VA**
Power consumption at U_B DC	**2.5 W**
Frequency range AC	**50 - 60 Hz**
Residual ripple DC	**20 %**
Utilisation category in accordance with **EN 60947-4-1**	
Auxiliary contacts: AC1 at **240 V**	I_{min}: **0.10 A** , I_{max}: **5.0 A** P_{max}: **1200 VA**
Auxiliary contacts: DC1 at **24 V**	I_{min}: **0.10 A** , I_{max}: **5.0 A** P_{max}: **120 W**
Utilisation category in accordance with **EN 60947-5-1**	
Auxiliary contacts: AC15 at **230 V**	I_{max}: **3.0 A**
Auxiliary contacts: DC13 at **24 V** (6 cycles/min)	I_{max}: **2.0 A**
Contact material	**AgCdO + 3.0 µm Au**
External contact fuse protection (I_K = 1 kA) to **EN 60947-5-1**	
Blow-out fuse, quick	
Auxiliary contacts:	**6 A**
Blow-out fuse, slow	
Auxiliary contacts:	**4 A**
Measuring circuit	
Rated mains voltage	**0 ... 400 V**
Rated mains voltage in according with UL	**0 ... 300 V**
Max. external voltage	**460 V**
Max. measuring voltage U_M	**±16 V**
Max. measuring current I_M	**1 mA**
Min. measuring circuit impedance	**250 kOhm**
Response value R_{an}	**10 ... 200 kOhm**
Max. response error in accordance with EN 61557-8	**±15 % ±1kOhm**
Max. leakage capacitance	**20 µF**
Environmental data	
EMC	**EN 61000-6-2**, **EN 61000-6-4**
Vibration to **EN 60068-2-6**	
Frequency	**10 - 55 Hz**
Amplitude	**0.35 mm**
Climatic suitability	**EN 60068-2-78**
Airgap creepage in accordance with	**EN 60664-1**
Pollution degree	**2**
Overvoltage category	**III**
Rated insulation voltage	**250 V**
Rated impulse withstand voltage	
Auxiliary contacts for the remaining circuits	**6.00 kV**
Supply voltage, measuring circuit for the remaining circuits	**4.0 kV**
Ambient temperature	**-10 - 55 °C**
Storage temperature	**-40 - 85 °C**

Insulation monitoring
PMD s20

Environmental data	
Protection type	
Mounting (e.g. cabinet)	**IP54**
Housing	**IP40**
Terminals	**IP20**
Condensation and ice formation	**not permitted**
Mechanical data	
Housing material	
Housing	**PC**
Front	**PC**
Cross section of external conductors with screw terminals	
1 core flexible	**0.25 - 2.50 mm² , 24 - 12 AWG** No. 760120
with crimp connectors, without insulating sleeve	**0.25 - 1.00 mm² , 24 - 16 AWG** No. 760120
without crimp connectors or with TWIN crimp connectors	**0.20 - 1.50 mm² , 24 - 16 AWG** No. 760120
Torque setting with screw terminals	**0.50 Nm**
Cross section of external conductors with spring-loaded terminals: Flexible with/without crimp connectors	**0.20 - 2.50 mm² , 24 - 12 AWG** No. 761120
Stripping length	**9 mm** No. 761120
Dimensions	
Height	**98.0 mm**
Width	**45.0 mm**
Depth	**120.0 mm**
Weight	**270 g**

Leitungskapazität/Line capacitance/Capacité du câblage	Messzeit /Time of measurement/Temps de mesure
0.5 µF	**5 s**
1 µF	**10 s**
5 µF	**50 s**
20 µF	**240 s**

Order reference

Type	Features	Terminals	Order no.
PMD s20	24 - 240 V AC/DC	with screw terminals	760 120
PMD s20 C	24 - 240 V AC/DC	with spring-loaded terminals	761 120

Pilz GmbH & Co. KG, Felix-Wankel-Straße 2, 73760 Ostfildern, Germany
Telephone: +49 711 3409-0, Telefax: +49 711 3409-133, E-Mail: pilz.gmbh@pilz.de

Pilz GmbH & Co. KG, Felix-Wankel-Straße 2, 73760 Ostfildern, Germany
Telephone: +49 711 3409-0, Telefax: +49 711 3409-133, E-Mail: pilz.gmbh@pilz.de

Electronic monitoring relays PMDsrange

Contents		Page
Electronic monitoring relays PMDsrange		
Voltage monitoring		
Single-phase voltage monitoring	S1UM	1.2-2
Three-phase voltage monitoring	S3UM	1.2-6
Phase sequence monitoring		
	S1PN	1.2-11
True power monitoring		
	S1WP	1.2-14
Current monitoring		
	S1IM	1.2-21
Isolation monitoring		
	S1EN	1.2-25
Thermistor monitor		
	S1MS	1.2-32
	S1MN	1.2-37
	S1M0	1.2-42
Standstill monitoring		
	S1SW P	1.2-47
General details		
	Technical details	1.2-52
	Dimensioned drawings, housing features	1.2-53

Single-phase voltage monitoring
S1UM



The S1UM voltage monitoring relay is used to monitor min. or max. voltage values.

Approvals

	S1UM
c UL us LISTED	◆
CCC	◆

Unit features

- 12 measuring ranges 0.1 V ... 500 V, selectable
- Reaction time can be set to up to 10 seconds
- Detects AC/DC voltage values automatically
- Normally energised or normally de-energised mode
- Galvanic isolation between measuring and supply voltage
- S1UM UP version: measuring inputs are not polarity-sensitive
- Response value can be set from 20 % to 100 % of the measuring range limit value
- Hysteresis can be set from 0.6 to 0.95 x U_{on}
- Fault status can be latching or non-latching
- LEDs for relay's switch status and for supply voltage

Description

The voltage monitoring relay is enclosed in an S-95 slimline housing. There are 8 versions available for AC operation and one for DC operation.
Features

- Relay outputs: 1 auxiliary contact (C/O)
- 3 measuring circuits for 1 V, 20 V and 500 V, each with 4 different ranges

The S1UM monitors for voltage values exceeding a threshold limit. On the S1UM UP version, the measuring inputs are not polarity-sensitive. If the measuring voltage reaches the set response value U_{on}, auxiliary contact 11-14 changes over and the LED lights. If the measuring voltage falls below the hysteresis value U_{off} and automatic reset is selected, the auxiliary contact changes over again and the LED goes out. The unit is ready for operation again. If faults are latched, the unit will not be ready for operation again until an external reset button is operated or the supply voltage has been switched off and then on again.

Internal wiring diagram

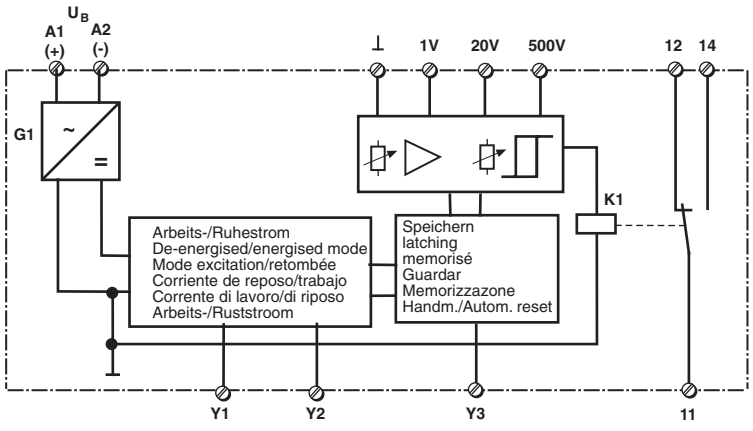

Pilz GmbH & Co. KG, Felix-Wankel-Straße 2, 73760 Ostfildern, Germany
Telephone: +49 711 3409-0, Telefax: +49 711 3409-133, E-Mail: pilz.gmbh@pilz.de

Single-phase voltage monitoring
S1UM

Timing diagram

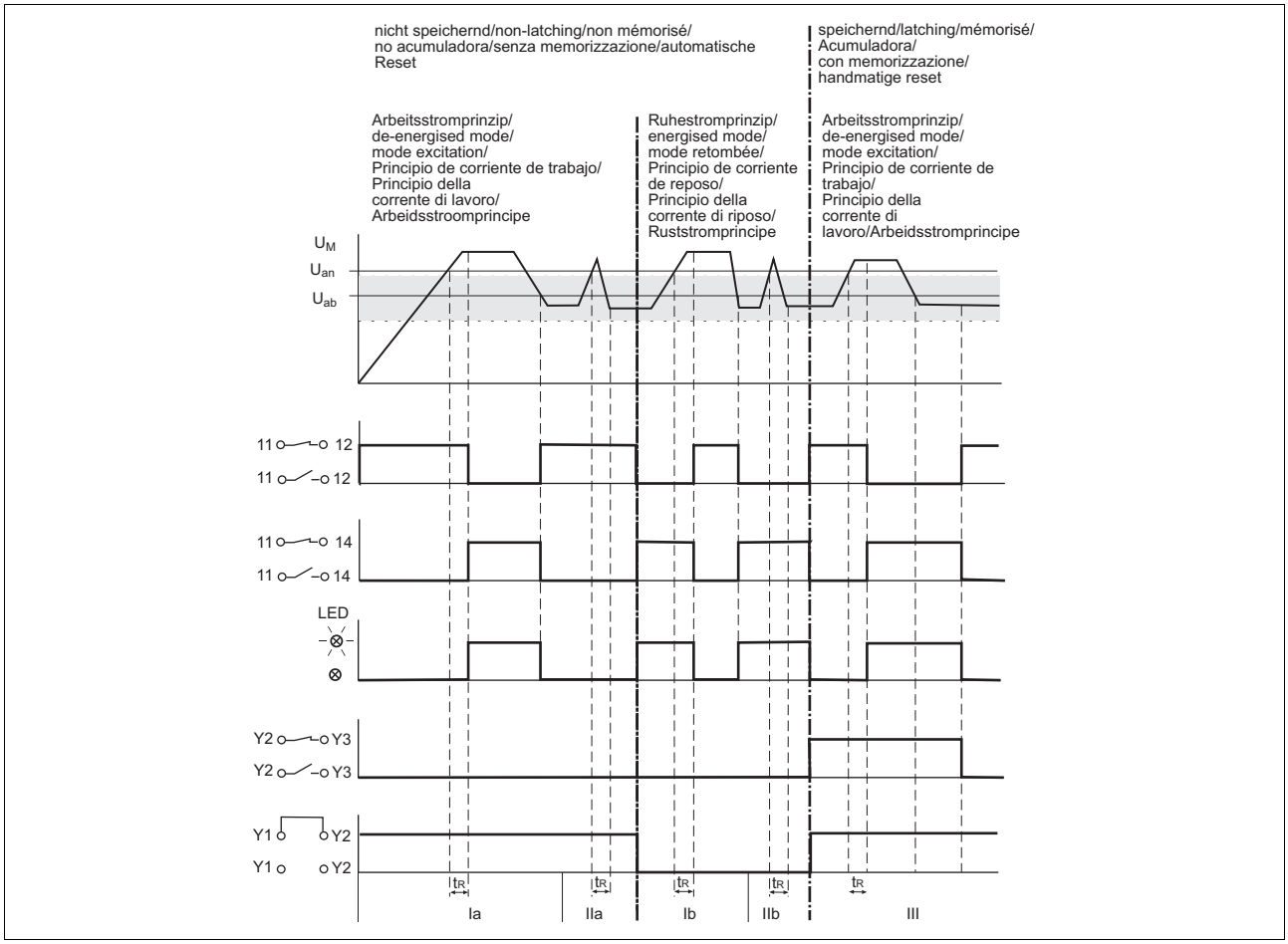

Key

- Hysteresis (U_{off}): 0.6 to 0.95 x U_{on}
- Grey area: Adjustable hysteresis
- t_r: Reaction time
- Ia: $U_M > U_{on}$: Once t_R has elapsed, the relay energises and the LED "OUT" is lit.
  $U_M < U_{off}$: Relay de-energises and LED goes out.
- IIa: $U_M > U_{on}$ before t_R has elapsed: Relay remains de-energised.
- Ib: $U_M > U_{on}$: As above, but relay de-energises and LED "OUT" goes out.
  $U_M < U_{off}$: Relay energises and LED is lit.
- IIb: As above, but relay remains energised.
- III: $U_M > U_{on}$: See above
  $U_M < U_{off}$: Relay does not de-energise until Y2-Y3 is open.

Single-phase voltage monitoring
S1UM

Connection examples

- Example 1
  Normally energised, non-latching

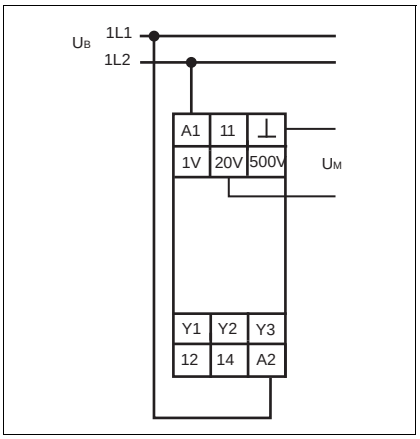

- Example 3
  Normally de-energised, latching

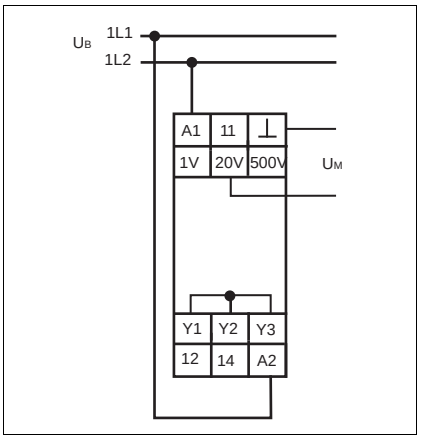

- Example 2
  Normally de-energised, non-latching

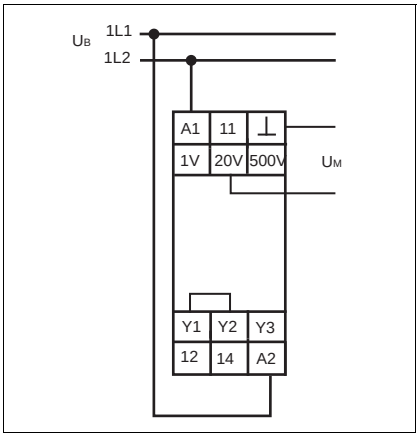

- Example 4
  Normally energised, latching

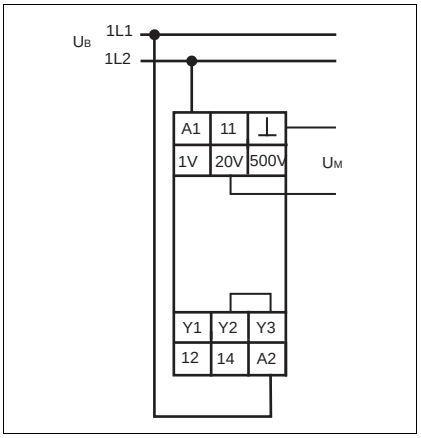

Technical details	S1UM
Electrical data	
Supply voltage	AC: 24, 42 ... 48, 110 ... 127, 230 ... 240 VDC: 24 V
Tolerance	85 ... 110 %
Frequency range AC	50 ... 60 Hz
Power consumption	AC: 2 VA, DC: 1 W
Utilisation category in accordance with EN 60947-4-1	AC1: 240 V/0.1 ... 5 A/1200 VA DC1: 24 V/0.1 ... 5 A/120 W
EN 60947-5-1	AC15: 230 V/2 A; DC13: 24 V/1.5 A
Output contacts	1 auxiliary contact (C/O)
Contact material	AgCdO, 3 µm gold plating for low load range 1-50 V/1-100 mA
Contact fuse protection to EN 60947-5-1	Max. 6 A quick or max. 4 A slow

Pilz GmbH & Co. KG, Felix-Wankel-Straße 2, 73760 Ostfildern, Germany
Telephone: +49 711 3409-0, Telefax: +49 711 3409-133, E-Mail: pilz.gmbh@pilz.de

Single-phase voltage monitoring
S1UM

Measuring circuit	
Frequency range	0, 40 ... 400 Hz
Adjustable limit values for measuring ranges	1 V: 1, 0.5; 0.2, 0.1 V 20 V: 20, 10, 4, 2 V 500 V: 500, 250, 100, 50 V
Hysteresis	60 ... 95 % of response value
Impedance of the measuring inputs	1 V: 15 kOhm 20 V: 390 kOhm 500 V: 10 MOhm
Overload capacity of the measuring inputs	1 V: max. 40 V 20 V: max. 200 V 500 V: max. 700 V
Polarity of the measuring inputs	Polarised S1UM UP version: Any
Reaction time	0.1 … 10 s
Temperature dependence	+/-0.05 % per +1 °C
Environmental data	
EMC	EN 60947-5-1, EN 61000-6-2
Vibration in accordance with EN 60068-2-6	Frequency: 10 ... 55 Hz Amplitude: 0.35 mm
Climatic suitability	EN 60068-2-78
Airgap creepage	EN 60947-1
Ambient temperature	-15 ... +55 °C
Storage temperature	-40 ... +85 °C
Mechanical data	
Cross section of external conductors 1 core flexible 2 core with the same cross section, flexible with crimp connectors, no plastic sleeve without crimp connectors or with TWIN crimp connectors	 0.20 – 4.00 mm², 24 – 10 AWG 0.20 – 2.50 mm², 24 – 14 AWG 0.20 – 2.50 mm², 24 –14 AWG
Torque setting for connection terminals	0.6 Nm
Mounting position	Any
Housing material Housing Front	 PPO UL 94 V0 ABS UL 94 V0
Protection types	Mounting: IP54 Housing: IP40 Terminals: IP20
Dimensions (H x W x D)	87 x 22.5 x 122 mm
Weight	165 g

Order reference

Type	U_B	U_M	Order no.
S1UM	24 VAC	500 VAC/DC	827 230
S1UM	42 - 48 VAC	500 VAC/DC	827 240
S1UM	110 - 130 VAC	500 VAC/DC	827 250
S1UM	230 - 240 VAC	500 VAC/DC	827 260
S1UM UP	24 VDC	500 VAC/DC	827 225
S1UM UP	24 VAC	500 VAC/DC	827 235
S1UM UP	42 - 48 VAC	500 VAC/DC	827 245
S1UM UP	110 - 130 VAC	500 VAC/DC	827 255
S1UM UP	230 - 240 VAC	500 VAC/DC	827 265

U_B: Supply voltage
U_M: Measuring voltage
Additional versions on request

Pilz GmbH & Co. KG, Felix-Wankel-Straße 2, 73760 Ostfildern, Germany
Telephone: +49 711 3409-0, Telefax: +49 711 3409-133, E-Mail: pilz.gmbh@pilz.de

Three-phase voltage monitoring
S3UM



The S3UM voltage monitoring relay is used to monitor overvoltage and undervoltage as well as the phase sequence in 3-phase supplies.

Approvals

	S3UM
c UL us LISTED	◆
CCC	◆

Approvals for unit types up to 240 VAC

Unit features

- Monitors supplies with and without neutral conductors
- Trip device for undervoltage and overvoltage
- Evaluates phase sequence
- Detects asymmetry
- Detects phase failure
- Reaction time can be set to up to 10 s
- Operates to normally energised or normally de-energised mode
- Overvoltage value can be set from 100 % to 120 % of the rated mains voltage
- Fault status can be latching or non-latching
- LED as supply voltage indicator
- LED for all faults: phase sequence error, under/overvoltage
- Phase failure is detected even when there is voltage feedback from connected loads
- Range switching 10 % for L1-L3
- Separate supply voltage A1-A2

Description

The voltage monitoring relay is enclosed in an S-95, slimline housing. Various versions are available for AC and DC operation.
Features
- Relay outputs: 1 auxiliary contact (C/O)
- 2 measuring circuits
- Undervoltage value can be set from 75 % to 100 % of the rated mains voltage or from 40 % to 100 % (unit type)

Internal wiring diagram

MR: Manual reset, AR: Automatic reset

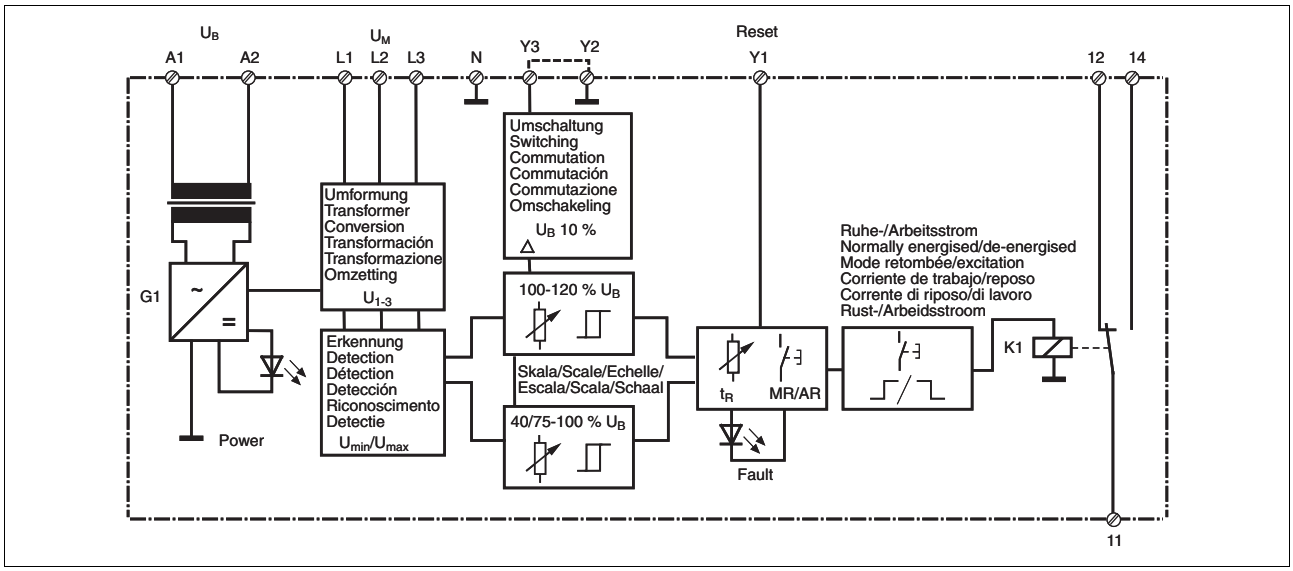

Pilz GmbH & Co. KG, Felix-Wankel-Straße 2, 73760 Ostfildern, Germany
Telephone: +49 711 3409-0, Telefax: +49 711 3409-133, E-Mail: pilz.gmbh@pilz.de

Three-phase voltage monitoring
S3UM

Timing diagram

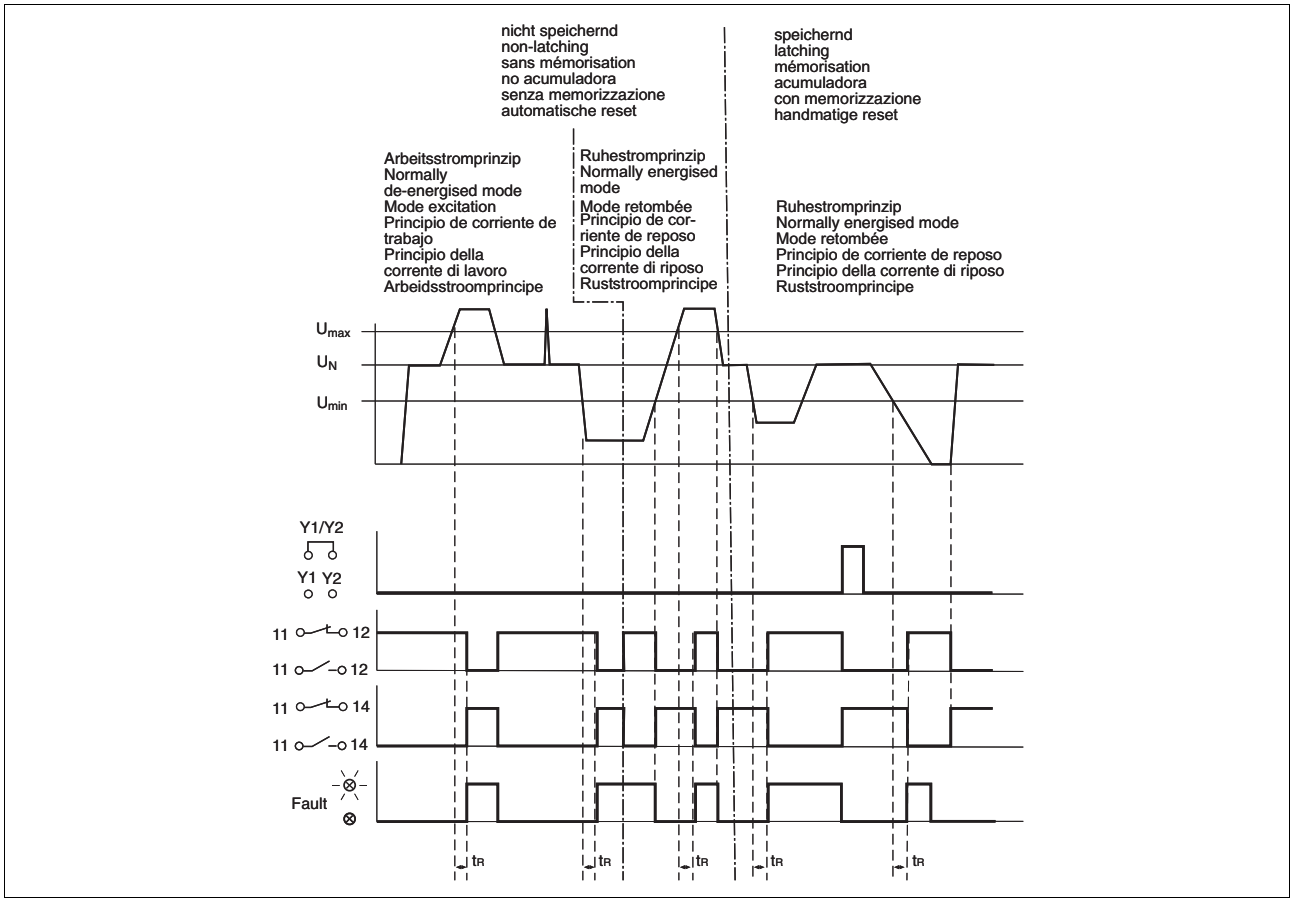

Key

- U_{max} Overvoltage response value
- U_{min} Undervoltage response value
- U_N Rated mains voltage
- t_r Reaction time
- Y1/Y2 linked: Automatic reset

Three-phase voltage monitoring
S3UM

Application example

Safety device protects against over-voltage and undervoltage, operating in normally energised mode

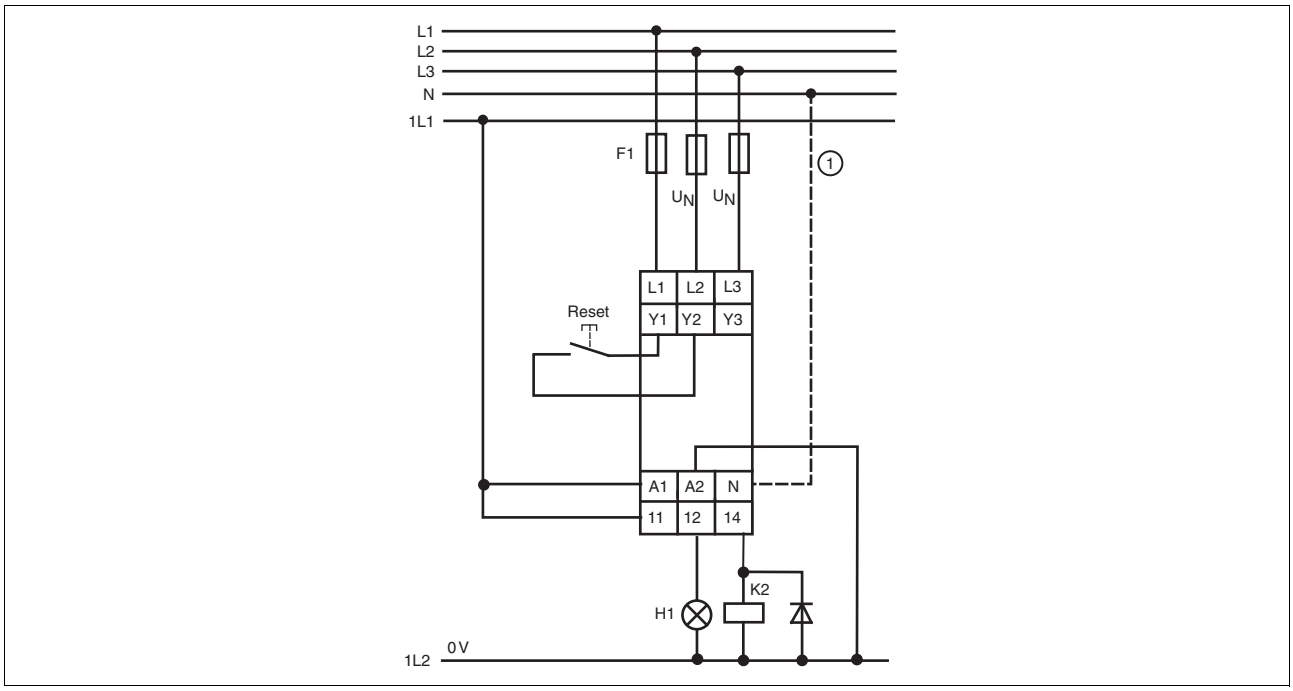

- 1: Not required on three phase supplies

Pilz GmbH & Co. KG, Felix-Wankel-Straße 2, 73760 Ostfildern, Germany
Telephone: +49 711 3409-0, Telefax: +49 711 3409-133, E-Mail: pilz.gmbh@pilz.de

Three-phase voltage monitoring
S3UM

Technical details	S3UM
Electrical data	
Supply voltage U_B	AC: 120, 230 V DC: 24 V
Voltage tolerance U_B	85 ... 110 %
Frequency range U_B	50 ... 60 Hz
Residual ripple DC	160 %
Power consumption U_B	AC: 2 VA DC: 1.5 W
Duty cycle	100 %
Utilisation category in accordance with EN 60947-4-1 EN 60947-5-1	 AC1: 240 V/0.1 ... 5 A/1200 VA DC1: 24 V/0.1 ... 5 A/120 W AC15: 230 V/2 A; DC13: 24 V/1.5 A
Output contacts	1 auxiliary contact (C/O)
Contact material	AgCdO, 3 µm gold plating for low load range 1-50 V/1-100 mA
Contact fuse protection to EN 60947-5-1	Max. 6 A quick or max. 4 A slow
Measuring circuit	
Measuring voltage U_M (3AC)	42, 100/110, 230, 400/440, 415/460 , 440/480, 500/550 V, selectable
Voltage tolerance U_M	0 ... 125 %
Measuring range switching (10 %) via terminals Y2, Y3	Open: high value Closed: low value (ex-works setting)
Frequency range	40 ... 400 Hz
Setting range U_{min}/ U_{max}	U_{min}: 75 - 100 %; U_{max}: 100 – 120 % Order no. 837251, 837271: U_{min}: 40 – 100 %; U_{max}: 100 – 120 %
Evaluates phase sequence	75 – 120 % U_M
Hysteresis	ca. 2 %
Delay-on energisation	0,5 ... 10 s selectable
Environmental data	
EMC	EN 50081-1; EN 50082-2
Vibration in accordance with EN 60068-2-6	Frequency: 10 ... 55 Hz Amplitude: 0.35 mm
Climatic suitability	EN 600068-2-78
Airgap creepage	EN 60947-1
Ambient temperature	-15 ... +55 °C
Storage temperature	-40 ... +85 °C
Mechanical data	
Cross section of external conductors 1 core flexible 2 core with the same cross section, flexible with crimp connectors, no plastic sleeve without crimp connectors or with TWIN crimp connectors	 0.20 – 4.00 mm², 24 – 10 AWG 0.20 – 2.50 mm², 24 – 14 AWG 0.20 – 2.50 mm², 24 - 14 AWG
Torque setting for connection terminals	0.8 Nm (screws)
Mounting position	Any
Housing material Housing Front	 PPO UL 94 V0 ABS UL 94 V0
Protection types	Mounting: IP54 Housing: IP40 Terminals: IP20
Dimensions (H x W x D)	87 x 22.5 x 122 mm
Weight	175 g

Three-phase voltage monitoring
S3UM

Order reference

Type	U_B	U_M	Order no.
S3UM	24 VDC	42 VAC	837 240
S3UM	24 VDC	100/110 VAC	837 250
S3UM	24 VDC	100/110 VAC	837 251
S3UM	24 VDC	230 VAC	837 260
S3UM	24 VDC	400/440 VAC	837 270
S3UM	24 VDC	400/440 VAC	837 271
S3UM	24 VDC	415/460 VAC	837 280
S3UM	24 VDC	440/480 VAC	837 285
S3UM	24 VDC	500/550 VAC	837 290
S3UM	120 VAC	440/480 VAC	837 395
S3UM	230 VAC	42 VAC	837 340
S3UM	230 VAC	100/110 VAC	837 350
S3UM	230 VAC	230 VAC	837 360
S3UM	230 VAC	400/440 VAC	837 370
S3UM	230 VAC	415/460 VAC	837 380
S3UM	230 VAC	500/550 VAC	837 390

U_B: Supply voltage
U_M: Measuring voltage
Additional versions on request

Pilz GmbH & Co. KG, Felix-Wankel-Straße 2, 73760 Ostfildern, Germany
Telephone: +49 711 3409-0, Telefax: +49 711 3409-133, E-Mail: pilz.gmbh@pilz.de

Phase sequence monitoring
S1PN



The S1PN phase sequence monitoring relay detects the phase field of a 3-phase supply.

Approvals

	S1PN
c UL us LISTED	◆
CCC	◆

UL approval only for unit types up to 240 VAC

Unit features

- Measuring voltage up to 690 VAC
- Phase sequence monitoring
- Phase failure monitoring
- Fuse monitoring
- LEDs
- Extensive voltage range

The phase sequence monitoring relay is enclosed in an S-95 slimline housing. Three versions are available.
Features:
- Relay outputs: 2 auxiliary contacts (C/O)
- Phase field direction monitor
- Detects fuse defect and phase failure, provided there is no voltage feedback from connected motors
- LEDs for fault and supply voltage

The phase sequence monitoring relay detects the time sequence of the individual phases in a three phase supply. In a clockwise phase sequence, contacts 11-12 and 21-22 are open, contacts 11-14 and 21-24 are closed. In an anti-clockwise phase sequence, contacts 11-14 and 21-24 are open, contacts 11-12 and 21-22 are closed.

The S1PN can safely detect phase failure when the plant is at a standstill (load isolated from the measuring inputs).

Internal wiring diagram

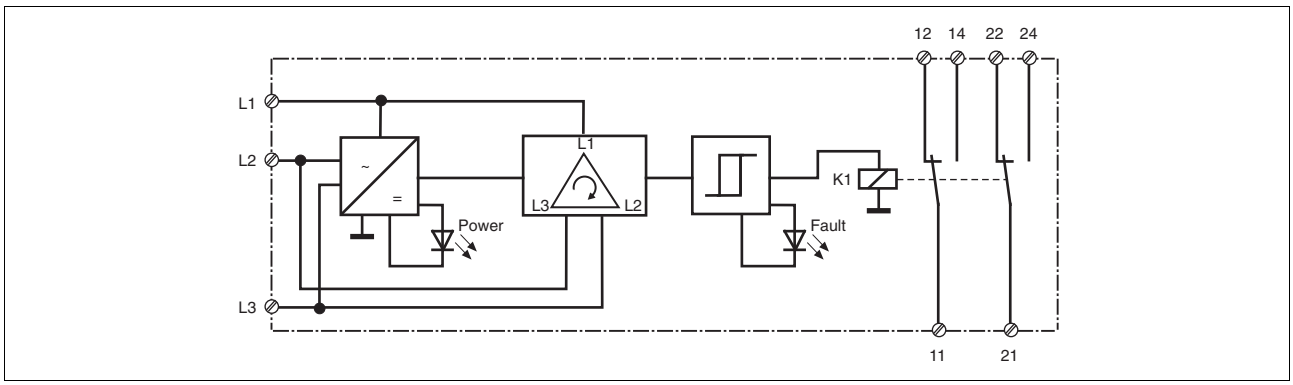

Phase sequence monitoring
S1PN

Connection example

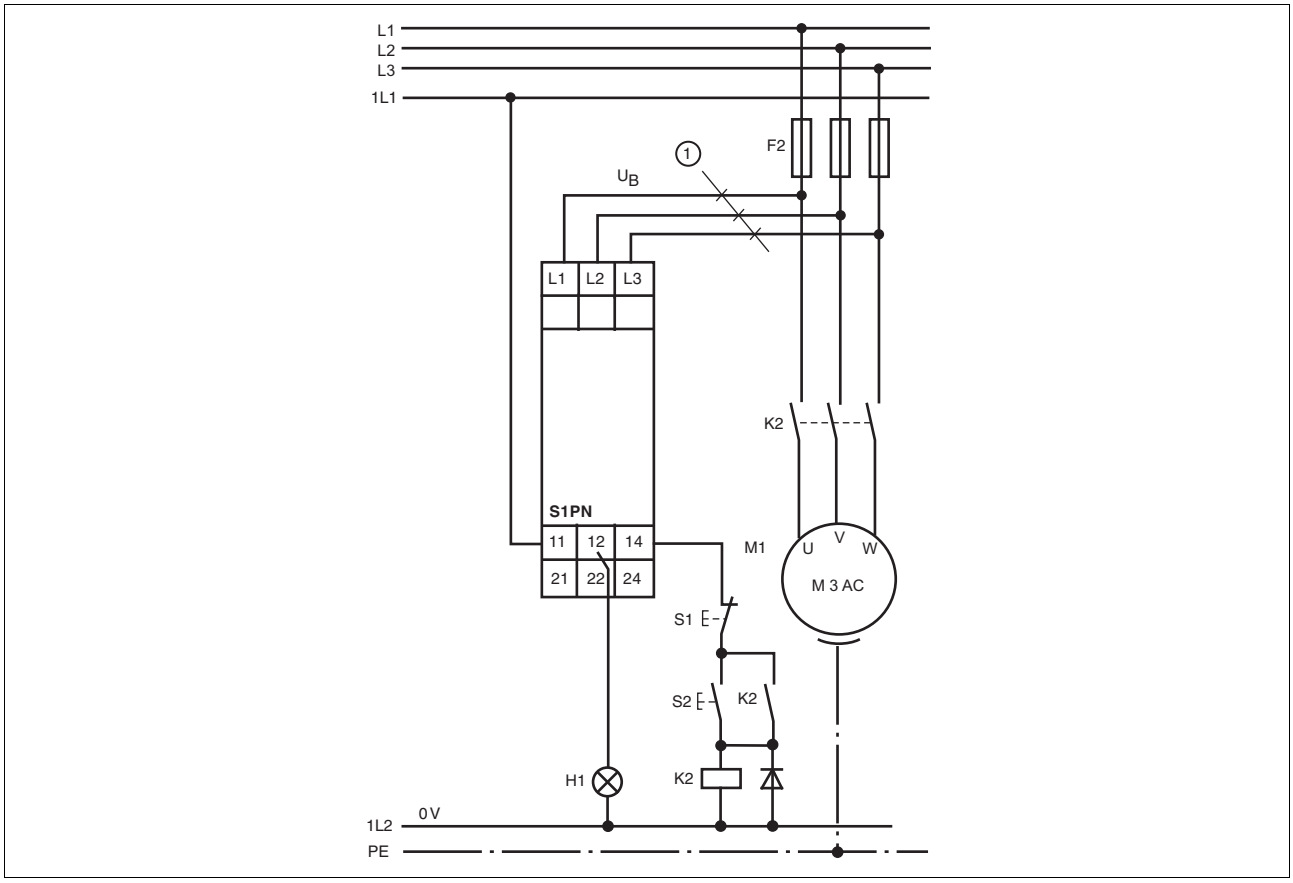

Key

- 1 = Cable cross section max. 4 mm^2, on larger motor cables the supply line should be fused!

Technical details	S1PN
Electrical data	
Supply voltage	AC: 200 ... 240, 400 ... 500, 550 ... 690 V
Tolerance	85 ... 110 %
Frequency range AC	50 ... 60 Hz
Power consumption	200 ... 240 V: 8 VA; 400 ... 500 V: 15 VA; 550 ... 690 V: 20 VA
Utilisation category in accordance with EN 60947-4-1 EN 60947-5-1	 AC1: 240 V/0.1 ... 5 A/1200 VA DC1: 24 V/0.1 ... 5 A/120 W AC15: 230 V/2 A; DC13: 24 V/1.5 A
Output contacts	2 auxiliary contacts (2 C/O)
Contact material	AgCdO, 3 µm gold plating for low load range 1-50 V/1-100 mA
Contact fuse protection to EN 60947-5-1	Max. 6 A quick or max. 4 A slow
Times	
Delay-on energisation	Max. 300 ms (with correct phase sequence)
Delay-on de-energisation	Max. 700 ms (after phase failure)

Pilz GmbH & Co. KG, Felix-Wankel-Straße 2, 73760 Ostfildern, Germany
Telephone: +49 711 3409-0, Telefax: +49 711 3409-133, E-Mail: pilz.gmbh@pilz.de

Phase sequence monitoring
S1PN

Environmental data	
EMC	EN 50081-1, EN 50082-2
Vibration in accordance with EN 60068-2-6	Frequency: 10 ... 55 Hz Amplitude: 0.35 mm
Climatic suitability	EN 60068-2-78
Airgap creepage	EN 60947-1
Ambient temperature	-15 ... +55 °C
Storage temperature	-40 ... +85 °C
Mechanical data	
Cross section of external conductors	
1 core flexible	0.20 – 4.00 mm², 24 – 10 AWG
2 core with the same cross section, flexible	
with crimp connectors, no plastic sleeve	0.20 – 2.50 mm², 24 – 14 AWG
without crimp connectors or with TWIN crimp connectors	0.20 – 2.50 mm², 24 – 14 AWG
Torque setting for connection terminals	0.6 Nm (screws)
Mounting position	Any
Housing material	
Housing	PPO UL 94 V0
Front	ABS UL 94 V0
Protection types	Mounting: IP54 Housing: IP40 Terminals: IP20
Dimensions (H x W x D)	87 x 22.5 x 121 mm
Weight	130 g

Order reference

Type	U_B/U_M	Order no.
S1PN	200 - 240 V	890 200
S1PN	400 - 500 V	890 210
S1PN	550 - 690 V	890 220

U_B: Supply voltage
U_M: Measuring voltage

True power monitoring
S1WP



True power converter for single and three-phase supplies, used to measure and monitor the rated power or true power on electrical machines.

Approvals

	S1WP
c UL us LISTED	◆
CCC	◆

Unit features

- 9 different measuring ranges
- Large voltage measuring range
- Analogue output can be switched for current and voltage
- Relay output for monitoring underload or overload
- Suitable for use with frequency-controlled motors
- Suitable for current transformers

Description

The true power converter is enclosed in a 22.5 mm S-95 housing. 4 versions are available for different voltage measuring ranges, 2 versions are available for different current measuring ranges and 2 versions are available for a separate supply voltage.
Features:

- Relay output:
  1 auxiliary contact (C/O)
- Versions with 9 A and 18 A current measuring range
- Fast, analogue reaction time
- Adjustable switching threshold for underload or overload, from 5 to 100 % of the measuring range limit value
- Switching hysteresis of 15 %
- Adjustable monitoring reaction time
- Adjustable start-up suppression time
- LEDs for supply voltage and status of auxiliary contacts, underload or overload

The S1WP monitors the set upper and lower true power limit on a single or three phase supply. It converts the true power or rated power into an analogue output signal, which is proportional to the true power. The analogue output signal and the status of threshold monitoring are displayed at a relay output.

The S1WP operates in normally energised mode, so in its default state contact 11-14 is closed and contact 11-12 open. If normally de-energised mode is required, the functions of the upper and lower threshold are transposed. In overload (UL) mode, if the measured true power exceeds the switching threshold, the auxiliary contact switches and the “FLT” LED is lit. In underload (LL) mode, if the measured true power drops below the switching threshold, the auxiliary contact switches and the “FLT” LED is lit.

The measurement is suppressed during the machine's start-up phase, in order to avoid spurious output signals. The start-up suppression time t_s is adjustable. In the case of transient load fluctuations, the switching threshold can be suppressed. The reaction time t_r is adjustable.

Pilz GmbH & Co. KG, Felix-Wankel-Straße 2, 73760 Ostfildern, Germany
Telephone: +49 711 3409-0, Telefax: +49 711 3409-133, E-Mail: pilz.gmbh@pilz.de

True power monitoring
S1WP

Internal wiring diagram

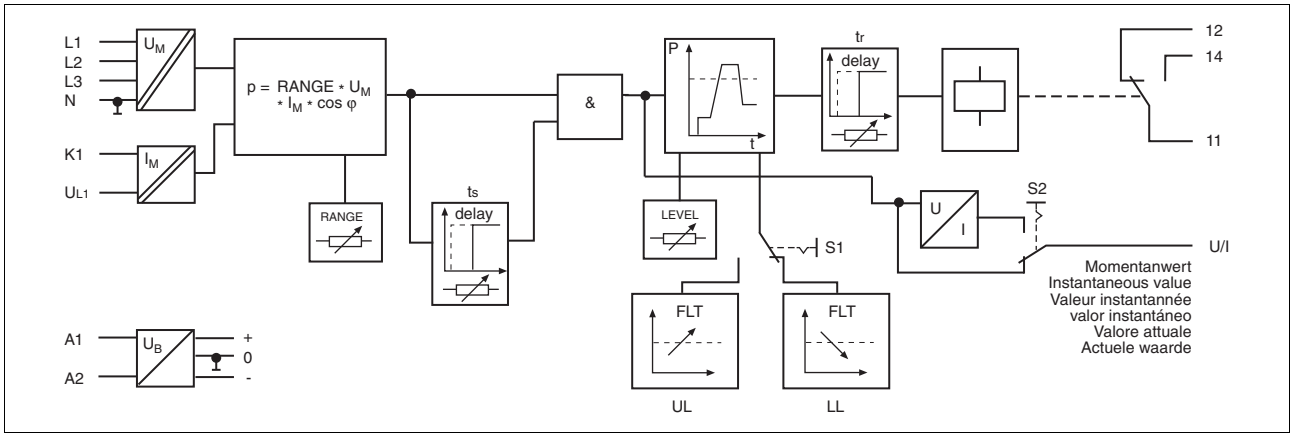

Key

- U_M Measuring voltage
- I_M Measuring current
- U_B Supply voltage
- cosφ Power factor
- RANGE Measuring range
- t_s Start-up suppression time
- t_r Reaction time
- LEVEL Switching threshold
- UL Overload threshold
- LL Underload threshold

Timing diagram

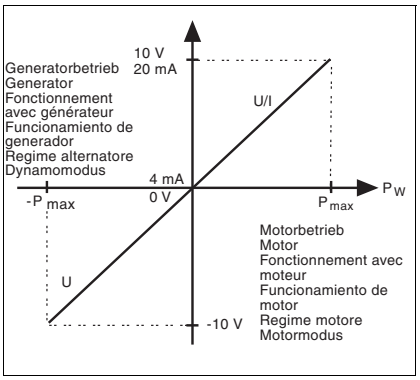

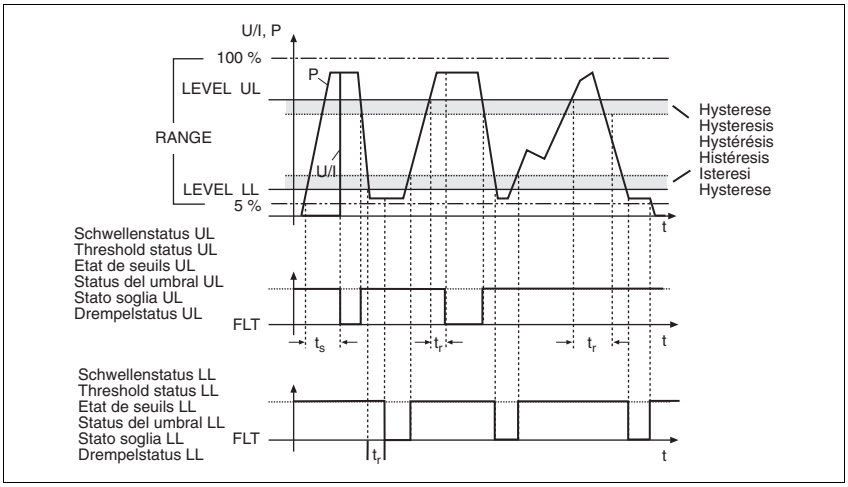

- P Actual true power
- U/I Analogue output signal, voltage or current

True power monitoring
S1WP

Adjustable limit values for measuring ranges

Measuring range / RANGE		T	1 *2	2 *2	3 *2	4 *2	5	6	7	8	9	Type	
1 AC/DC	3 AC											I_M [A]	U_M [V]
0 ... 70	0 ... 120	*1	0,208	0,415	0,623	0,83	1,04	1,25	1,45	1,66	1,87	9	120
			0,415	0,83	1,25	1,66	2,08	2,5	2,91	3,32	3,74	18	
0 ... 140	0 ... 240		0,415	0,83	1,25	1,66	2,08	2,5	2,91	3,32	3,74	9	240
			0,83	1,66	2,5	3,32	4,15	4,5	5,8	6,65	7,5	18	
0 ... 240	0 ... 415		0,72	1,44	2,15	2,88	3,6	4,3	5,03	5,75	6,5	9	415
			1,44	2,87	4,3	5,75	7,19	8,6	10,0	11,5	13,0	18	
0 ... 320	0 ... 550		0,95	1,9	2,85	3,8	4,76	5,7	6,7	7,6	8,6	9	550
			1,9	3,8	5,7	7,6	9,5	11,4	13,34	15,24	17,15	18	

*1 Test: Function reserved
*2 Not suitable for DC measurements

The information on U_M refers to the phase-to-phase voltage on the three phase supply (3AC). Where a single phase supply is used (1 AC), the voltage measuring range is reduced to:

$$U_{M\,(1\,AC)} = \frac{U_{M\,(3\,AC)}}{\sqrt{3}}$$

Pilz GmbH & Co. KG, Felix-Wankel-Straße 2, 73760 Ostfildern, Germany
Telephone: +49 711 3409-0, Telefax: +49 711 3409-133, E-Mail: pilz.gmbh@pilz.de

True power monitoring
S1WP

Connection examples

- Example 1
  Monitoring a three-phase motor,
  I_N < 9 A/18 A

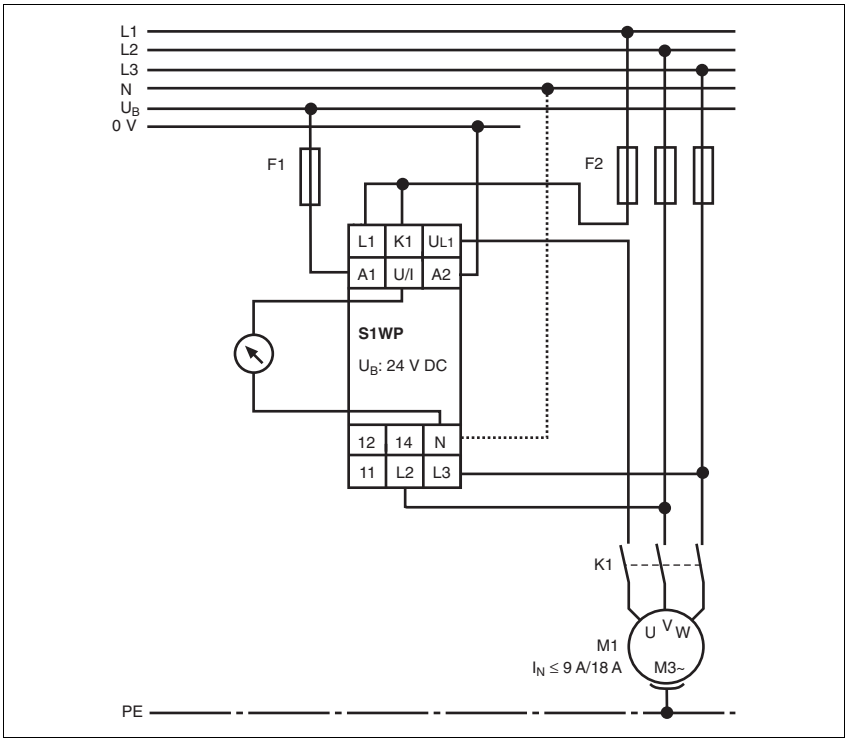

- Example 2
  Monitoring a three-phase motor;
  I_N > 9 A/18 A

1: Cable cross section max. 4 mm²

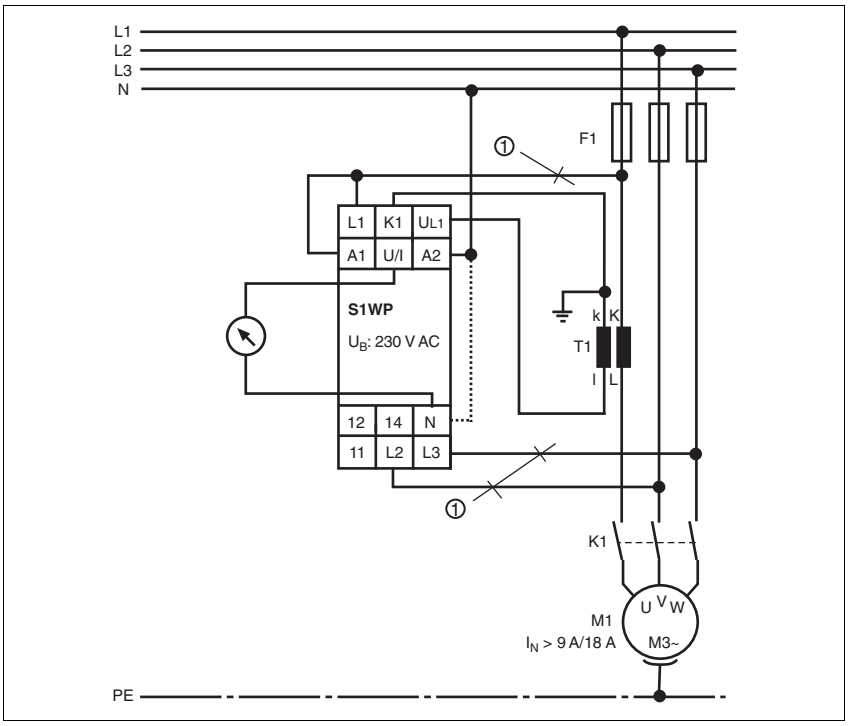

True power monitoring
S1WP

- Example 3
  Monitoring a single-phase motor,
  IN < 9 A/18 A

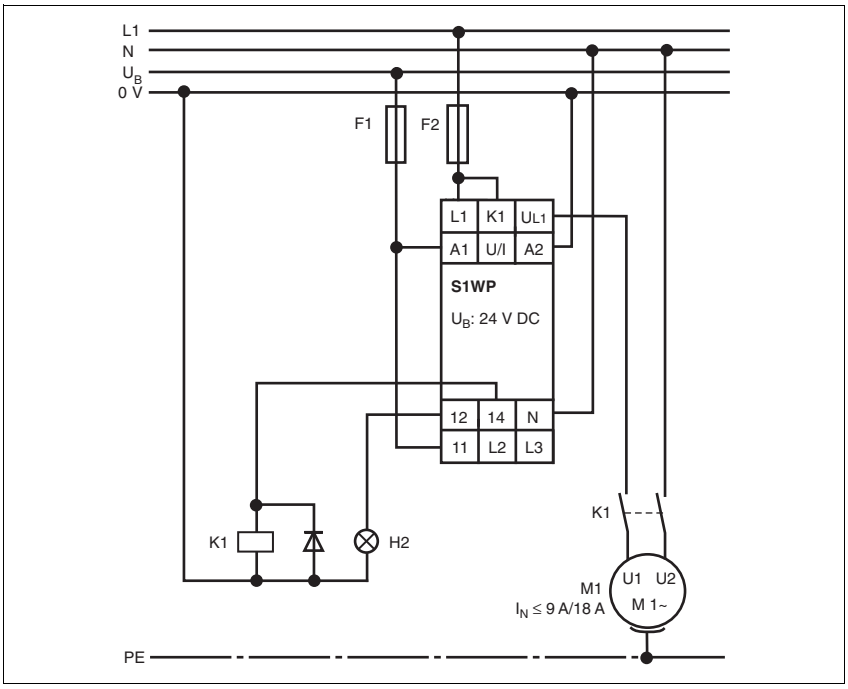

- Example 4
  Monitoring a single-phase motor; I_N > 9 A/18 A

1: Cable cross section max. 4 mm²

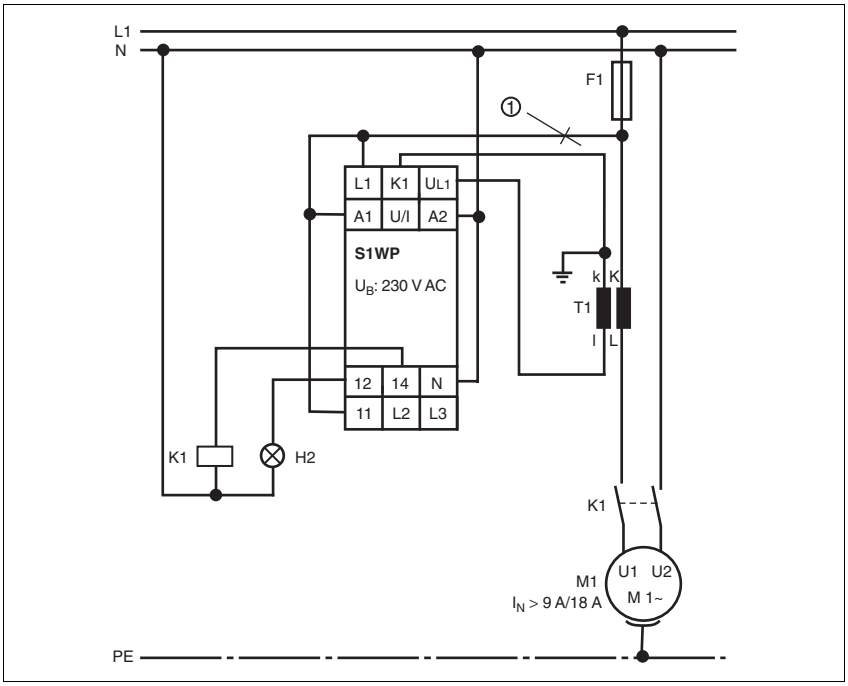

Pilz GmbH & Co. KG, Felix-Wankel-Straße 2, 73760 Ostfildern, Germany
Telephone: +49 711 3409-0, Telefax: +49 711 3409-133, E-Mail: pilz.gmbh@pilz.de

True power monitoring
S1WP

Technical details	S1WP
Electrical data	
Supply voltage	DC: 24 V AC/DC: 230 V
Tolerance	DC: 85 ... 125 % AC/DC: 25 ... 115 %
Frequency range	30 ... 400 Hz
Power consumption	DC: 2 W at U_B: 24 V AC: 5 VA at U_B: 230 V
Utilisation category in accordance with EN 60947-4-1 EN 60947-5-1	 AC1: 240 V/0.1 ... 5 A/1200 VA DC1: 24 V/0.1 ... 5 A/120 W AC15: 230 V/0.1 ... 1.8 A DC13: 24 V/0.1 ... 1.5 A
Output contacts	1 auxiliary contact (C/O)
Contact material	AgCdO, 3 µm gold plating for low load range 1-50 V/1-100 mA
Contact fuse protection in accordance with EN 60947-5-1	Max. 6 A quick or max. 4 A slow
Analogue measuring output	Voltage: 0 ... ± 10 V Current: +4 ... + 20 mA
Analogue reaction time	60 ms
Linearity/switching accuracy	< ±2 %
Measuring circuit	
Measuring voltage	3 AC/DC: 0 ... 120, 0 ... 240, 0 ... 415, 0 ... 550 V 1 AC/DC: 0 ... 70, 0 ... 140, 0 ... 240, 0 ... 320 V
Frequency range	0 ... 1000 Hz
Adjustable limit values for measuring ranges	See table
Max. measuring current	22 A at 100 % duty cycle
Max. overload	45 A/max. 3 s
Reaction time	0,1 ... 20 s selectable
Start-up suppression time	0,1 ... 30 s selectable
Current transformer requirements	I = 1 A: 1,5 ... 7.5 VA, Class 3 I = 5 A: 2,5 ... 15 VA, Class 3
Environmental data	
EMC	EN 50081-1, EN 50082-2
Vibration in accordance with EN 60068-2-6	Frequency: 10 ... 55 Hz Amplitude: 0.35 mm
Climatic suitability	EN 60068-2-78
Airgap creepage	EN 60947-1
Ambient temperature	0 ... +55 °C
Storage temperature	-40 ... +85 °C
Mechanical data	
Cross section of external conductors 1 core flexible 2 core with the same cross section, flexible with crimp connectors, no plastic sleeve without crimp connectors or with TWIN crimp connectors	 0.20 – 4.00 mm², 24 – 10 AWG 0.20 – 2.50 mm², 24 – 14 AWG 0.20 – 2.50 mm², 24 – 14 AWG
Torque setting for connection terminals	0.60 Nm (screws)
Mounting position	Any
Housing material Housing Front	 PPO UL 94 V0 ABS UL 94 V0
Protection types	Mounting: IP54 Housing: IP40 Terminals: IP20
Dimensions (H x W x D)	87 x 22.5 x 121 mm
Weight	130 g

True power monitoring
S1WP

Order reference

Type	U_B	U_M	I_M	Order no.
S1WP	24 VDC	0 - 120 VAC/DC	9 A	890 000
S1WP	24 VDC	0 - 240 VAC/DC	9 A	890 010
S1WP	24 VDC	0 - 415 VAC/DC	9 A	890 020
S1WP	24 VDC	0 - 550 VAC/DC	9 A	890 030
S1WP	230 VAC/DC	0 - 120 VAC/DC	9 A	890 040
S1WP	230 VAC/DC	0 - 240 VAC/DC	9 A	890 050
S1WP	230 VAC/DC	0 - 415 VAC/DC	9 A	890 060
S1WP	230 VAC/DC	0 - 550 VAC/DC	9 A	890 070
S1WP	24 VDC	0 - 120 VAC/DC	18 A	890 100
S1WP	24 VDC	0 -240 VAC/DC	18 A	890 110
S1WP	24 VDC	0 - 415 VAC/DC	18 A	890 120
S1WP	24 VDC	0 - 550 VAC/DC	18 A	890 130
S1WP	230 VAC/DC	0 - 120 VAC/DC	18 A	890 140
S1WP	230 VAC/DC	0 - 240 VAC/DC	18 A	890 150
S1WP	230 VAC/DC	0 - 415 VAC/DC	18 A	890 160
S1WP	230 VAC/DC	0 - 550 VAC/DC	18 A	890 170

U_B: Supply voltage
U_M: Measuring voltage
I_M: Measuring current

Pilz GmbH & Co. KG, Felix-Wankel-Straße 2, 73760 Ostfildern, Germany
Telephone: +49 711 3409-0, Telefax: +49 711 3409-133, E-Mail: pilz.gmbh@pilz.de

Current monitoring
S1IM



The S1IM current monitoring relay is used to monitor the maximum current values on heaters, lamps etc.

Approvals

	S1IM
c UL us LISTED	◆
CCC	◆

Unit features

- 12 measuring ranges can be selected from 0.002 to 15 A
- Reaction time can be set to up to 10 seconds
- Operates to either normally energised or normally de-energised mode
- Galvanic isolation between measuring and supply voltage
- UP version: measuring inputs are not polarity-sensitive

Description

The current monitoring relay is enclosed in an S-95, slimline housing. There are 8 versions available for AC operation and one for DC operation.
Features
- Relay outputs: 1 auxiliary contact (C/O)
- 3 measuring circuits for 0.1 A, 2 A and E, each with 4 different ranges
- Response value can be set from 20 % to 100 % of the measuring range limit value
- Hysteresis factor can be set from 0.6 to 0.9 x I_{on}
- Fault latching or automatic reset
- LEDs for relay's switch status and for supply voltage

The S1IM monitors for current values exceeding a selectable threshold limit. On the UP version, the measuring inputs are not polarity-sensitive. If the measuring current reaches the response value I_{on}, auxiliary contact 11-14 changes over and the LED lights. If the measured current falls below the hysteresis value I_{off} and automatic reset is selected, the auxiliary contact changes over again and the LED goes out. The unit is ready for operation again. If faults are latched, the unit will not be ready for operation again until an external reset button is operated or the supply voltage has been switched off and then on again.

Internal wiring diagram

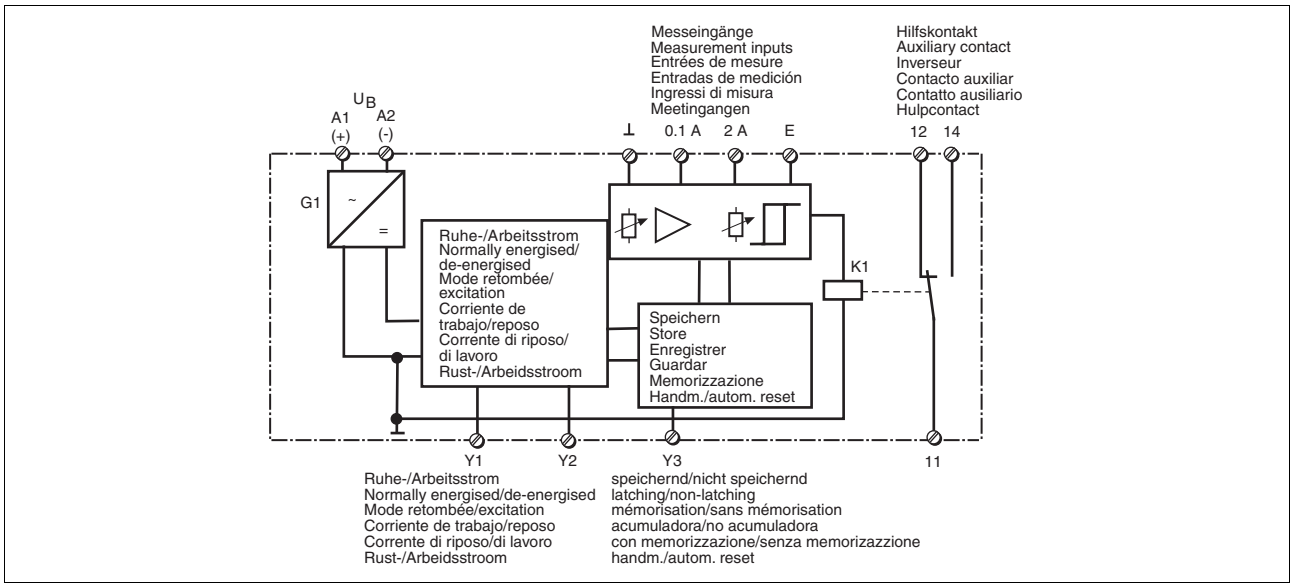

Pilz GmbH & Co. KG, Felix-Wankel-Straße 2, 73760 Ostfildern, Germany
Telephone: +49 711 3409-0, Telefax: +49 711 3409-133, E-Mail: pilz.gmbh@pilz.de

1001846-EN-01-2009-09

Current monitoring
S1IM

Timing diagram

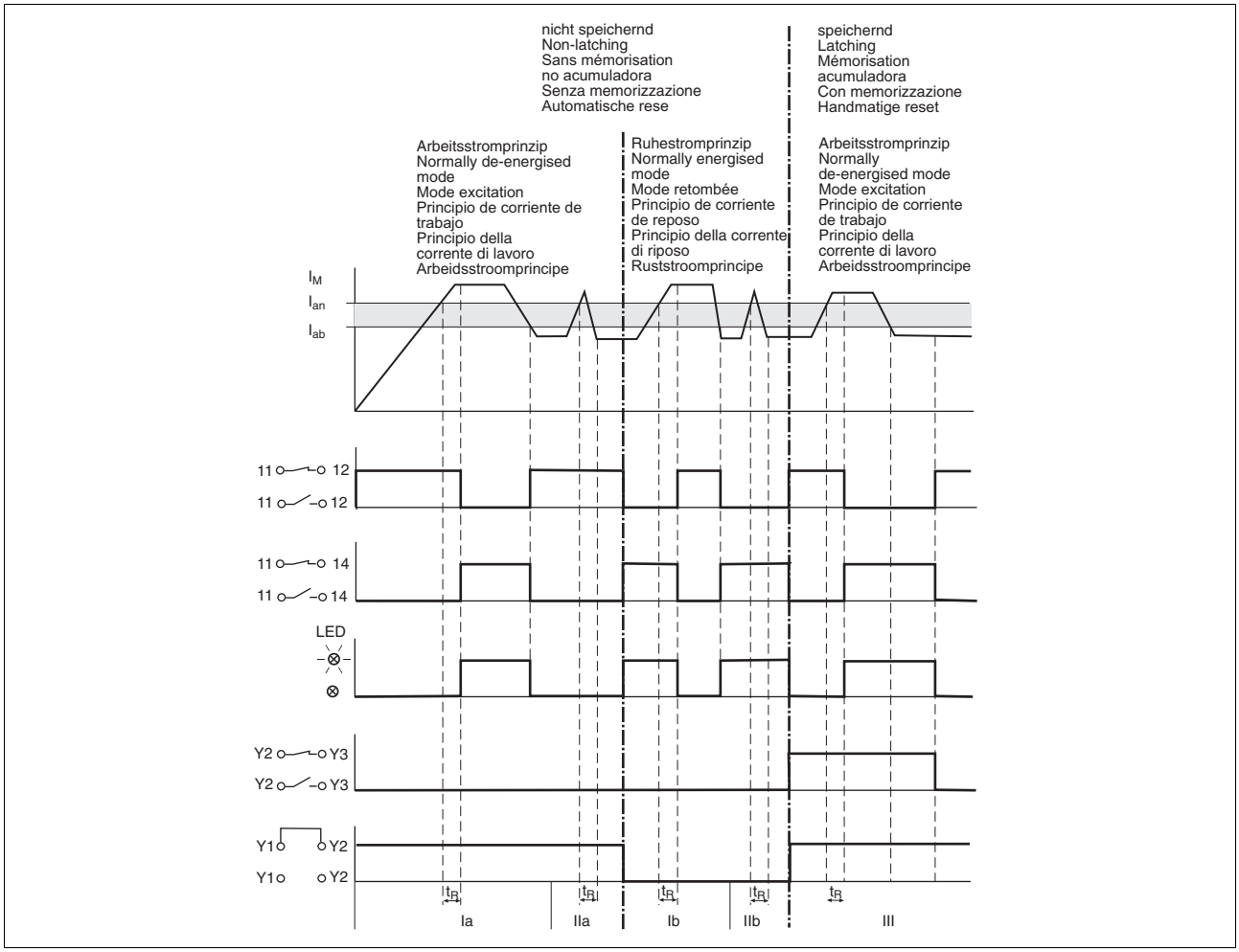

Key

- Hysteresis (I_{off}): 0.6 to 0.95 x I_{on}
- Grey area: Adjustable hysteresis
- t_r: Reaction time
- Ia: $I_M > I_{on}$: Once t_R has elapsed, the relay energises and the LED "OUT" is lit.
  $I_M < I_{off}$: Relay de-energises and LED goes out.
- IIa: $I_M > I_{on}$ before t_R has elapsed: Relay remains de-energised
- Ib: $I_M > I_{on}$: As above, but relay de-energises and LED "OUT" goes out.
  $I_M < I_{off}$: Relay energises and LED is lit.
- IIb: As above, but relay remains energised.
- III: $I_M > I_{on}$: See above
  $I_M < I_{off}$: Relay does not de-energise until Y2-Y3 is open.

Pilz GmbH & Co. KG, Felix-Wankel-Straße 2, 73760 Ostfildern, Germany
Telephone: +49 711 3409-0, Telefax: +49 711 3409-133, E-Mail: pilz.gmbh@pilz.de

Current monitoring
S1IM

Connection examples

- Example 1
  Normally energised, non-latching

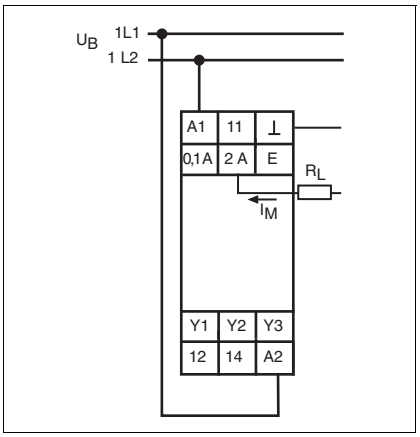

- Example 3
  Normally de-energised, latching

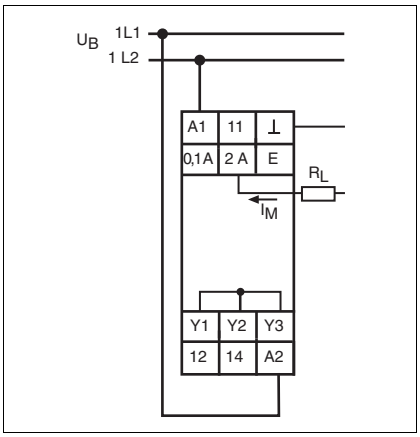

- Example 2
  Normally de-energised, non-latching

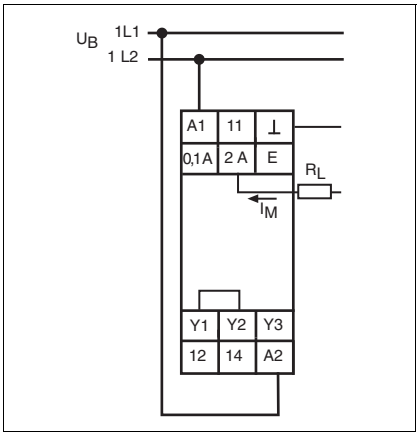

- Example 4
  Normally energised, latching

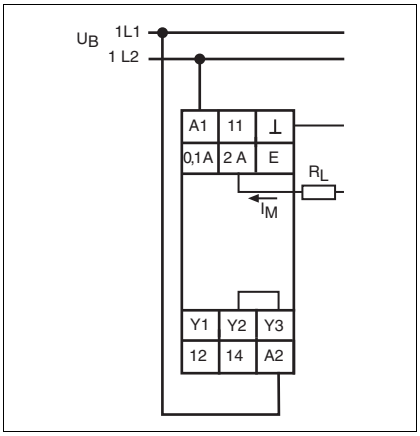

Technical details	S1IM
Electrical data	
Supply voltage	AC: 24, 42-48, 110-127, 230-240 V DC: 24 V
Tolerance	85 ... 110 %
Frequency range AC	50 ... 60 Hz
Power consumption	AC: 2 VA, DC: 1 W
Utilisation category in accordance with EN 60947-4-1 EN 60947-5-1	 AC1: 240 V/0.1 ... 5 A/1200 VA DC1: 24 V/0.1 ... 5 A/120 W AC15: 230 V/2 A; DC13: 24 V/1.5 A
Output contacts	1 auxiliary contact (C/O)
Contact material	AgCdO, 3 µm gold plating for low load range 1-50 V/1-100 mA
Contact fuse protection in accordance with EN 60947-5-1	Max. 6 A quick or max. 4 A slow

Current monitoring
S1IM

Measuring circuit	
Frequency range	DC, 40 ... 400 Hz
Adjustable limit values for measuring ranges	0.1 A: 0.1; 0.05; 0.02; 0.01 A 2 A: 2; 1; 0.4; 0.2 A E: 50 A/25 A/10 A/5 A
Hysteresis	60 ... 95 % of response value
Impedance of the measuring inputs	0.1 A: 2.5 Ω 2 A: 125 mΩ E: 5 mΩ
Max. overload	0.1 A: max. 0.2 A 2 A: max. 2.5 A E: 15 A/100 ED, 20 A/10 s, 50 A/2 s
Polarity of the measuring inputs	Polarised: UP version: Any
Reaction time	0,1 ... 10 s
Temperature dependence	± 0.05% per +1°C
Environmental data	
EMC	EN 60947-5-1, EN 61000-6-2
Vibration in accordance with EN 60068-2-6	Frequency: 10 ... 55 Hz Amplitude: 0.35 mm
Climatic suitability	EN 60068-2-78
Airgap creepage	EN 60947-1
Ambient temperature	-15 ... +55 °C
Storage temperature	-40 ... +85 °C
Mechanical data	
Cross section of external conductors	
1 core flexible	0.20 – 4.00 mm², 24 – 10 AWG
2 core with the same cross section, flexible	
with crimp connectors, no plastic sleeve	0.20 – 2.50 mm², 24 – 14 AWG
without crimp connectors or with TWIN crimp connectors	0.20 – 2.50 mm², 24 - 14 AWG
Torque setting for connection terminals	0.60 Nm (screws)
Mounting position	Any
Housing material	
Housing	PPO UL 94 V0
Front	ABS UL 94 V0
Protection types	Mounting: IP54 Housing: IP40 Terminals: IP20
Dimensions (H x W x D)	87 x 22.5 x 121 mm
Weight	170 g

Order reference

Type	U_B	I_M	Order no.
S1IM	24 VAC	15 A	828 020
S1IM	42 - 48 VAC	15 A	828 030
S1IM	110 - 130 V AC	15 A	828 040
S1IM	230 - 240 VAC	15 A	828 050
S1IM UP	24 VDC	15 A	828 035

U_B: Supply voltage
I_M: Measuring current
Additional versions on request

Pilz GmbH & Co. KG, Felix-Wankel-Straße 2, 73760 Ostfildern, Germany
Telephone: +49 711 3409-0, Telefax: +49 711 3409-133, E-Mail: pilz.gmbh@pilz.de

Isolation monitoring
S1EN



The S1EN insulation monitoring relay provides protection against insulation faults in galvanically isolated voltage supplies (IT systems). It meets the requirements of DIN EN 61557-8.

Approvals

	S1EN
c UL us LISTED	◆
	◆

Unit features

- For DC and AC supplies
- Normally energised mode
- Fault latching or automatic reset
- Normal/test mode
- External reset button can be connected

Description

The insulation monitoring relay is enclosed in an S-95, slimline housing. 2 versions are available, with measuring ranges of 50 kΩ and 200 kΩ. Its universal power supply operates with all supply voltages.
Features:

- Relay outputs: 1 auxiliary contact (C/O)
- Two insulation measuring circuits
- Detects symmetrical insulation faults
- Switch for function testing
- LED for supply voltage and fault

The unit measures the insulation resistance between the phases and the operating earth on galvanically isolated voltage supplies. If the insulation resistance in either of the two measuring circuits drops below the response value R_{on}, the auxiliary contact switches and the “Fault” LED is lit. If the release value R_{off} is then exceeded, the device is ready for operation immediately if automatic reset is selected; if manual reset is selected, it is necessary to operate an external button or the MR/AR switch.

Internal wiring diagram

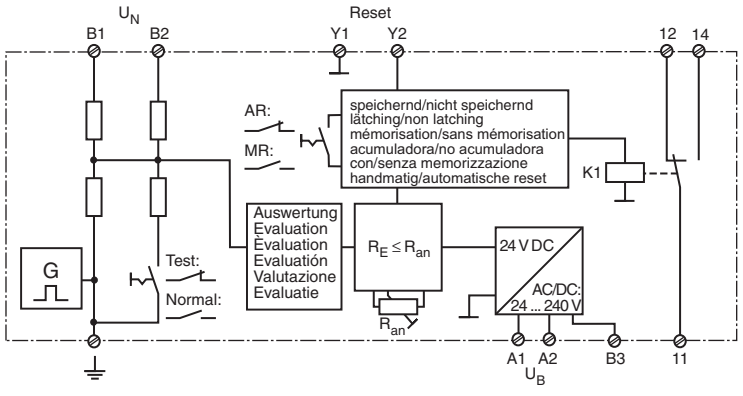

Key

- U_N: Mains voltage
- R_{on}: Response value
- U_B at B3-A2: 24 VAC/DC
- U_B at A1-A2: 42-240 VAC/DC

Pilz GmbH & Co. KG, Felix-Wankel-Straße 2, 73760 Ostfildern, Germany
Telephone: +49 711 3409-0, Telefax: +49 711 3409-133, E-Mail: pilz.gmbh@pilz.de

1001845-EN-01-2009-09

Isolation monitoring
S1EN

Timing diagram

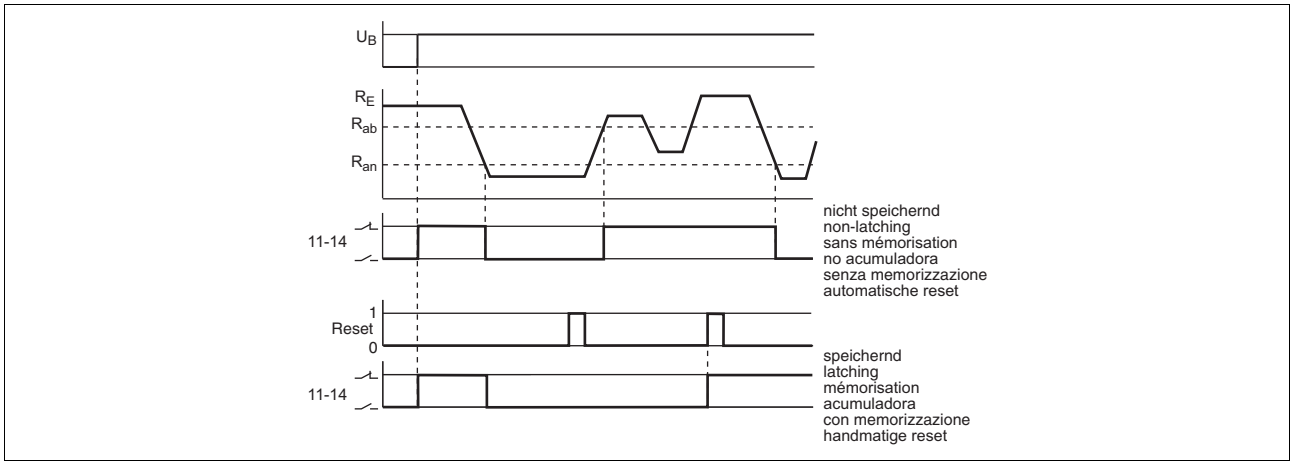

Key

- U_B: Supply voltage
- R_{on}: Response value
- R_{off}: Release value
- R_E: Insulation resistance

Connection examples

- Example 1
  AC application circuit

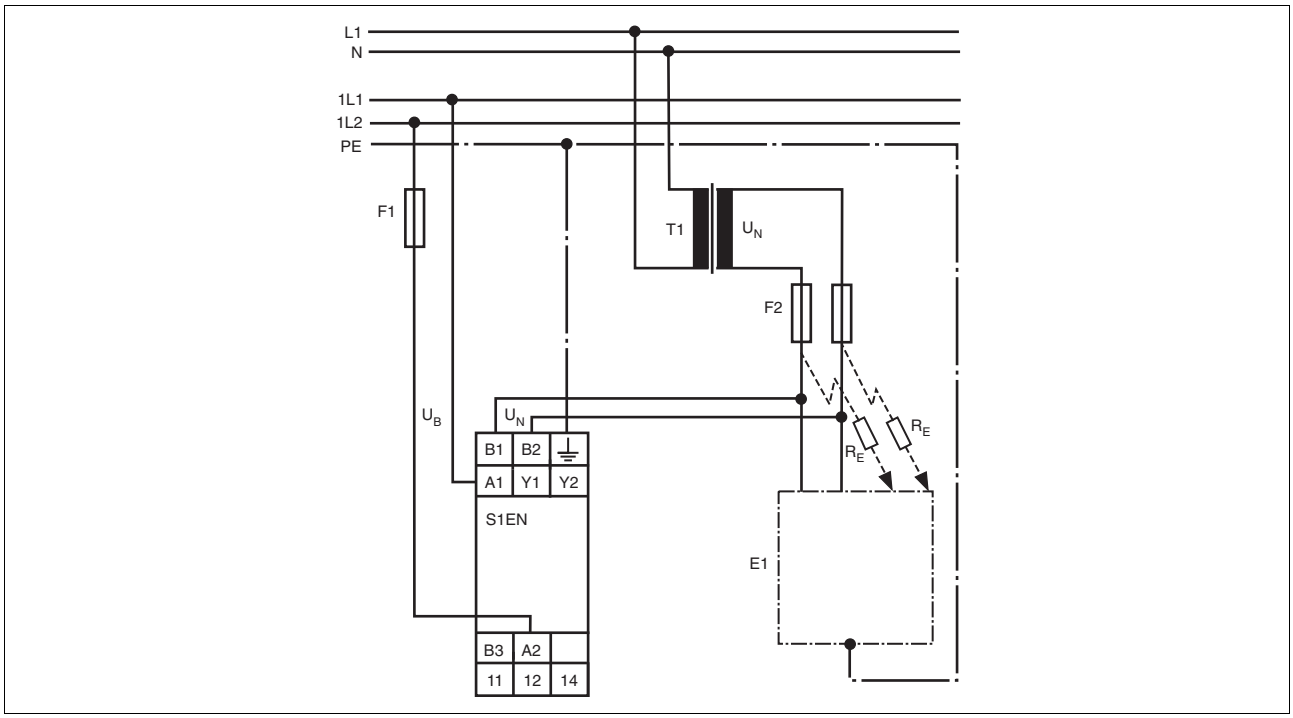

Pilz GmbH & Co. KG, Felix-Wankel-Straße 2, 73760 Ostfildern, Germany
Telephone: +49 711 3409-0, Telefax: +49 711 3409-133, E-Mail: pilz.gmbh@pilz.de

Isolation monitoring
S1EN

- Example 2
  3AC application circuit

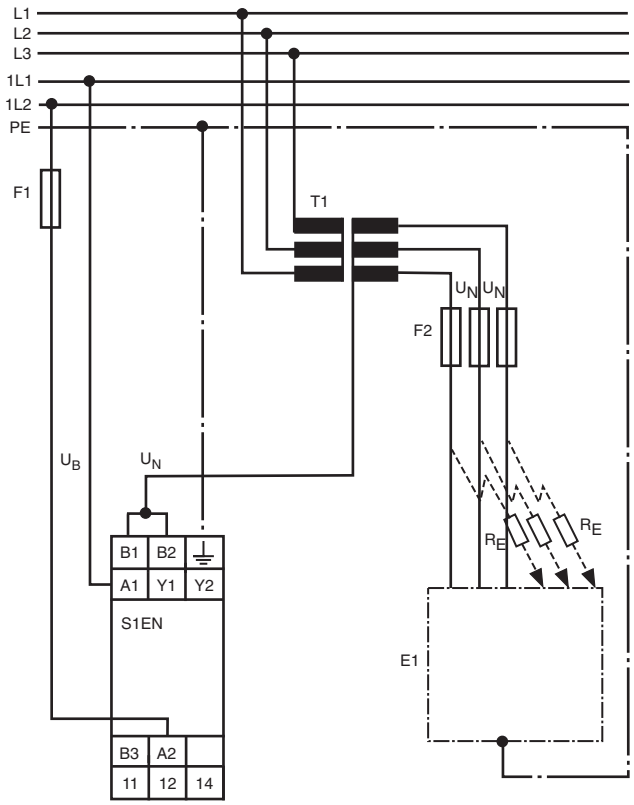

Isolation monitoring
S1EN

- Example 3
  3AC/DC application circuit

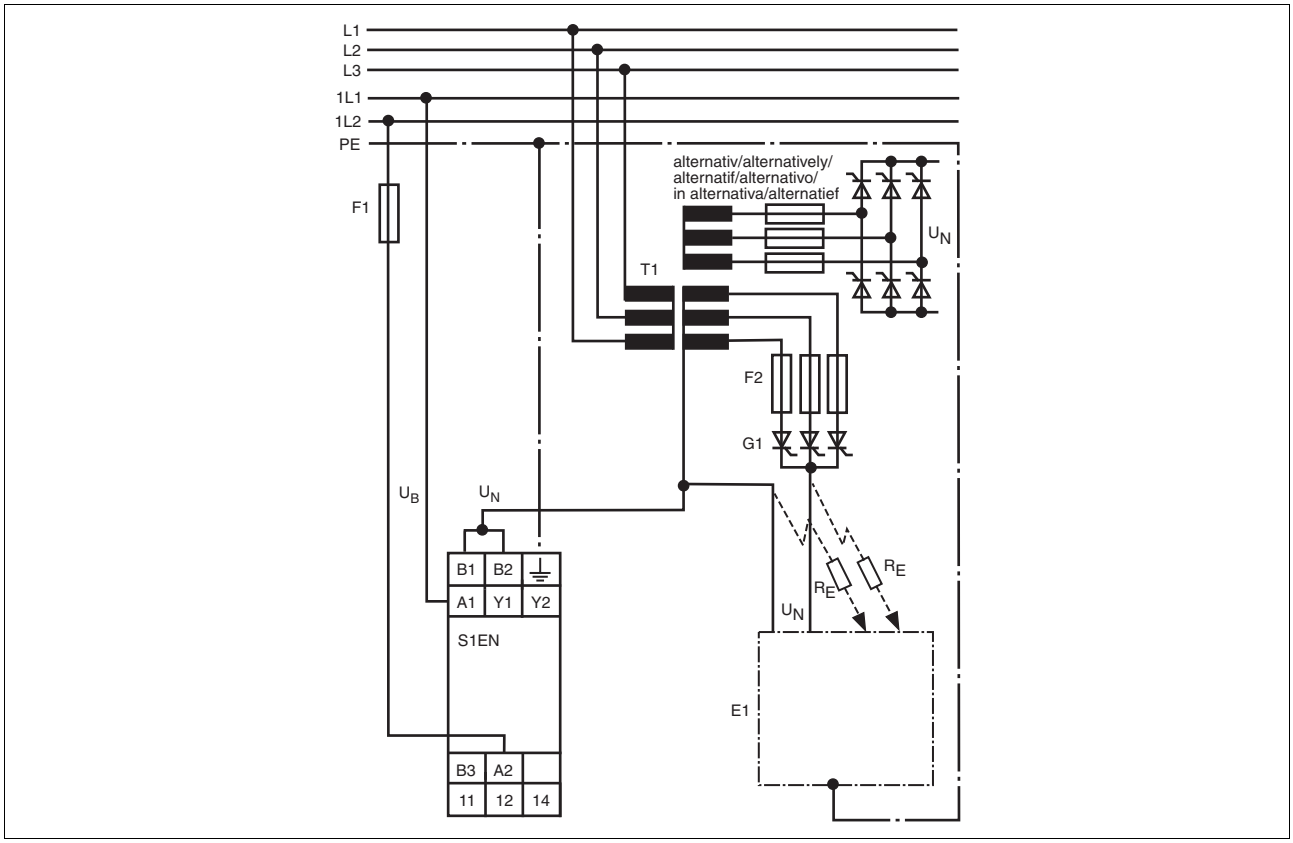

Pilz GmbH & Co. KG, Felix-Wankel-Straße 2, 73760 Ostfildern, Germany
Telephone: +49 711 3409-0, Telefax: +49 711 3409-133, E-Mail: pilz.gmbh@pilz.de

Isolation monitoring
S1EN

- Example 4
  DC application example

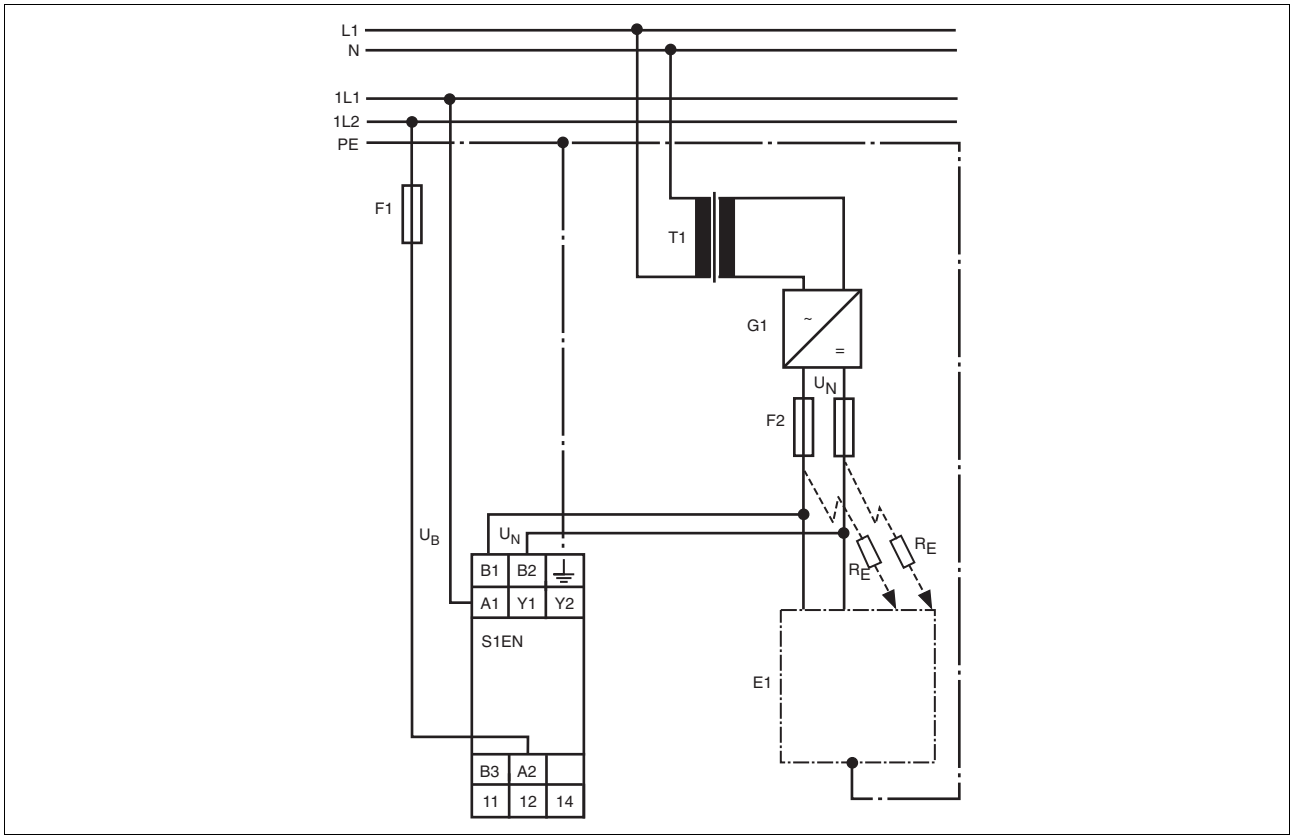

Isolation monitoring
S1EN

Technical details	S1EN
Electrical data	
Supply voltage	AC/DC: 24 ... 240 V
Tolerance	85 ... 110 %
Frequency range AC	50 … 60 Hz
Power consumption	240 VAC: 5 VA, 24 VDC: 1 W
Switching capability in accordance with EN 60947-4-1 EN 60947-5-1	 AC1: 240 V/0.1 ... 5 A/1200 VA DC1: 24 V/0.1 ... 5 A/120 W AC15: 230 V/2 A; DC13: 24 V/1.5 A
Output contacts	1 auxiliary contact (C/O)
Contact material	AgCdO, 3 µm gold plating for low load range 1-50 V/1-100 mA
Contact fuse protection in accordance with EN 60947-5-1	Max. 6 A quick or max. 4 A slow
Measuring circuit	
Rated mains voltage (monitored supply)	50 kΩ version: AC/DC: 0 ... 240 V 200 kΩ version: AC/DC: 0 ... 400 V
Response value	50 kΩ version: 12.5 ... 50 kΩ, selectable 200 kΩ version: 50 … 200 kΩ, selectable
Release value	50 kΩ version: Response value + ca. 5 kΩ 200 kΩ version: Response value + ca. 20 kΩ
Max. measuring current (DC)	50 kΩ version: 2.4 mA 200 kΩ version: 1.0 mA
Max. measuring voltage (DC)	± 17 V
Max. permitted external voltage (AC/DC)	50 kΩ version: 264 V 200 kΩ version: 460 V
Min. impedance (AC/DC)	50 kΩ version: 75 KΩ 200 kΩ version: 300 KΩ
Max. permitted line capacitance	1 µF
Max. response error in accordance with DIN EN 61557-8	± 15%
Measuring time	10 s
Environmental data	
EMC	EN 61000-6-2, EN 61000-6-4
Vibration in accordance with EN 60068-2-6	Frequency: 10 ... 55 Hz Amplitude: 0.35 mm
Climatic suitability	EN 60068-2-78
Airgap creepage	EN 60947-1
Ambient temperature	-10 ... +55 °C
Storage temperature	-40 ... +85 °C
Condensation and ice formation	Not permitted
Mechanical data	
Cross section of external conductors 1 core flexible 2 core with the same cross section, flexible with crimp connectors, no plastic sleeve without crimp connectors or with TWIN crimp connectors	 0.20 – 4.00 mm², 24 – 10 AWG 0.20 – 2.50 mm², 24 – 14 AWG 0.20 – 2.50 mm², 24 –14 AWG
Torque setting for connection terminals	0.6 Nm (screws)
Mounting position	Any
Housing material Housing Front	 PPO UL 94 V0 ABS UL 94 V0
Protection types	Mounting: IP54 Housing: IP40 Terminals: IP20
Dimensions (H x W x D)	87 x 22.5 x 121 mm
Weight	150 g

Pilz GmbH & Co. KG, Felix-Wankel-Straße 2, 73760 Ostfildern, Germany
Telephone: +49 711 3409-0, Telefax: +49 711 3409-133, E-Mail: pilz.gmbh@pilz.de

Isolation monitoring
S1EN

Order reference

Type	U_B	R_{on}	Order no.
S1EN	24 - 240 VAC/DC	50 KΩ	884 100
S1EN	24 - 240 VAC/DC	200 KΩ	884 110

U_B: Supply voltage
R_{on}: Response value

Thermistor monitor
S1MS



The S1MS thermistor monitoring relay is used as a protection device in temperature monitoring circuits in accordance with EN 44081. It protects motors, generators, storage areas, etc. from overheating.

Approvals

	S1MS
c UL us LISTED	◆
CCC	◆

UL approval only for unit types up to 240 VAC

Unit features

- For DC and AC supplies
- Normally energised mode
- Automatic reset

Description

The thermistor monitoring relay is enclosed in an S-95 slimline housing. There are 5 versions available for AC operation and one for AC and DC operation.

Features:

- Relay outputs: 2 auxiliary contacts (2 C/O)
- Measuring circuit for connecting a temperature sensor (PTC resistor, up to R_{max} 1.5 kΩ)
- Automatic reset
- LED for supply voltage and fault

The S1MS unit meets the following safety requirements:

- Operates to normally energised mode
- Protection of the monitored unit is guaranteed in the case of:
  - Power supply failure
  - Coil defect
  - Open circuit

A temperature sensor is connected to the S1MS measuring circuit. If the temperature exceeds a defined value, i.e. the resistance of the temperature sensor reaches the response value, the output contacts switch.
Contacts 11-14 and 21-24 open, contacts 11-12 and 21-22 close. If the temperature then falls again, i.e. the resistance of the temperature sensor reaches the release value, the auxiliary contacts automatically switch again. The unit is ready for operation.

Pilz GmbH & Co. KG, Felix-Wankel-Straße 2, 73760 Ostfildern, Germany
Telephone: +49 711 3409-0, Telefax: +49 711 3409-133, E-Mail: pilz.gmbh@pilz.de
1001889-EN-01-2013-04

Thermistor monitor
S1MS

Internal wiring diagram

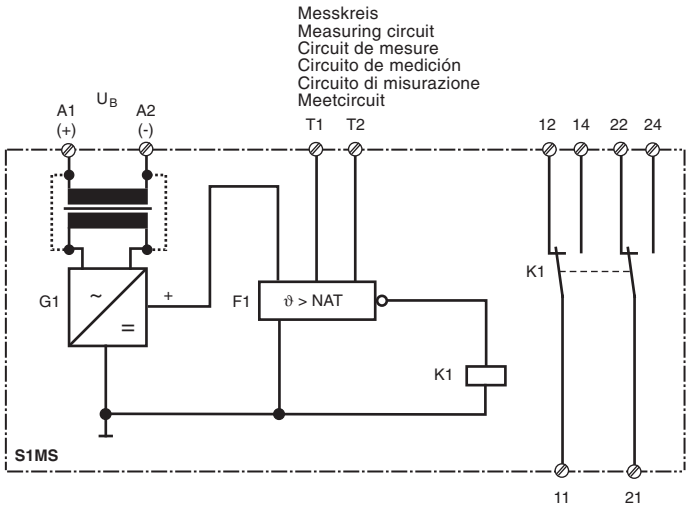

Thermistor monitor
S1MS

Timing diagram

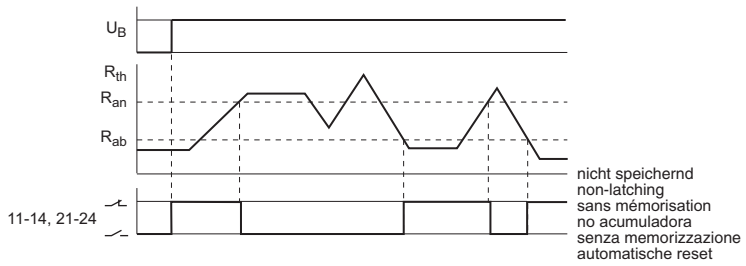

Key

- U_B Supply voltage
- R_{on} Response value
- R_{off} Release value
- R_{th} PTC resistor

Connection example

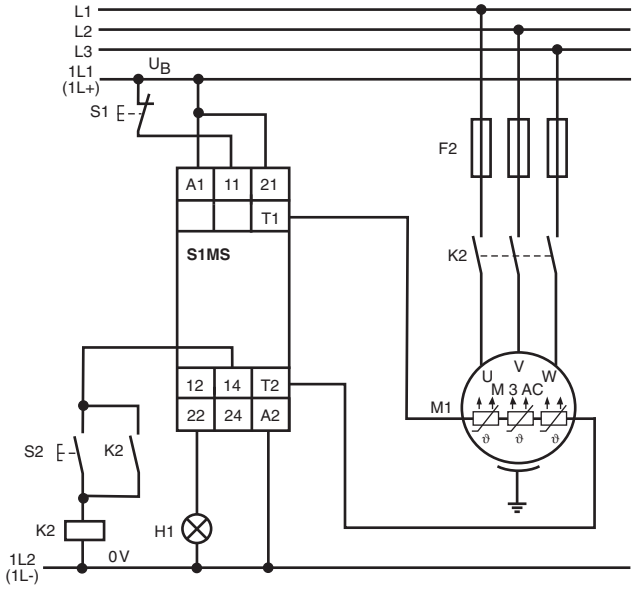

Pilz GmbH & Co. KG, Felix-Wankel-Straße 2, 73760 Ostfildern, Germany
Telephone: +49 711 3409-0, Telefax: +49 711 3409-133, E-Mail: pilz.gmbh@pilz.de

Thermistor monitor
S1MS

Technical details	S1MS
Electrical data	
Supply voltage	AC: 48, 110, 230, 240, 400 V AC/DC: 24 V
Tolerance	85 ... 110 %
Frequency range AC	50 ... 60 Hz
Power consumption	AC: ca. 3.5 VA, DC: 2 W
Utilisation category in accordance with EN 60947-4-1 EN 60947-5-1	 AC1: 240 V/0.1 ... 5 A/1200 VA DC1: 24 V/0.1 ... 5 A/120 W AC15: 230 V/2 A; DC13: 24 V/1.5 A
Output contacts	2 auxiliary contacts (2 C/O)
Contact material	AgCdO, 3 µm gold plating for low load range 1-50 V/1-100 mA
Contact fuse protection in accordance with EN 60947-5-1	Max. 6 A quick or max. 4 A slow
Measuring circuit	
Delay-on energisation	ca. 500 ms
Response value	3.6 kΩ ± 10 %
Release value	1.8 kΩ ± 10 %
Cold resistance at 20 °C	Max. 1.5 kΩ
Environmental data	
EMC	EN 60947-5-1, EN 61000-6-2
Vibration in accordance with EN 60068-2-6	Frequency: 10 ... 55 Hz Amplitude: 0.35 mm
Climatic suitability	EN 60068-2-78
Airgap creepage	EN 60947-1
Ambient temperature	-10 ... +55 °C
Storage temperature	-40 ... +85 °C
Mechanical data	
Cross section of external conductors 1 core flexible 2 core with the same cross section, flexible with crimp connectors, no plastic sleeve without crimp connectors or with TWIN crimp connectors	 0.20 – 4.00 mm², 24 – 10 AWG 0.20 – 2.50 mm², 24 – 14 AWG 0.20 – 2.50 mm², 24 – 14 AWG
Torque setting for connection terminals	0.6 Nm (screws)
Mounting position	Any
Housing material Housing Front	 PPO UL 94 V0 ABS UL 94 V0
Protection types	Mounting: IP54 Housing: IP40 Terminals: IP20
Dimensions (H x W x D)	87 x 22.5 x 121 mm
Weight	AC: 160 g; DC: 120 g

Thermistor monitor
S1MS

Order reference

Type	U_B	Order no.
S1MS	24 VAC/DC	839 775
S1MS	48 VAC	839 725
S1MS	110 VAC	839 740
S1MS	230 VAC	839 760
S1MS	240 VAC	839 765
S1MS	400 VAC	839 770

U_B: Supply voltage
Additional versions on request

Pilz GmbH & Co. KG, Felix-Wankel-Straße 2, 73760 Ostfildern, Germany
Telephone: +49 711 3409-0, Telefax: +49 711 3409-133, E-Mail: pilz.gmbh@pilz.de

Thermistor monitor
S1MN



The S1MN thermistor monitoring relay is used as a protection device in temperature monitoring circuits in accordance with EN 44081. It protects motors, generators, storage areas, etc. from overheating.

Approvals

	S1MN
c UL us LISTED	◆
CCC	◆

UL approval only for unit types up to 240 VAC

Unit features

- For DC and AC supplies
- Normally energised mode
- Monitors sensor short circuits
- Fault latching or automatic reset
- Manual reset via internal or external reset button

Description

The thermistor monitoring relay is enclosed in an S-95 slimline housing. Different versions are available for AC operation and one version is available for AC and DC operation.
Features:

- Relay outputs: 2 auxiliary contacts (2 C/O)
- Measuring circuit for connecting a temperature sensor (PTC resistor)
- Monitors the temperature sensor for short circuit
- LED for supply voltage and fault

A temperature sensor is connected to the S1MN measuring circuit. If the temperature exceeds a defined value, i.e. the resistance of the temperature sensor reaches the response value, the output contacts switch. If the temperature then falls again, i.e. the resistance of the temperature sensor reaches the release value, the auxiliary contacts switch again if automatic reset is selected. The unit is ready for operation. If manual reset is selected, an internal/external button must be operated. The unit can also be reset by interrupting the supply voltage.

Thermistor monitor
S1MN

Internal wiring diagram

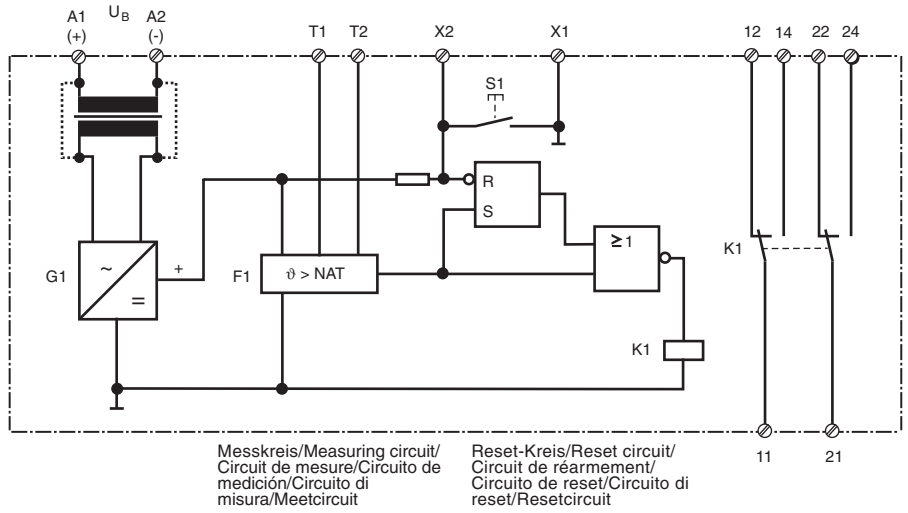

Pilz GmbH & Co. KG, Felix-Wankel-Straße 2, 73760 Ostfildern, Germany
Telephone: +49 711 3409-0, Telefax: +49 711 3409-133, E-Mail: pilz.gmbh@pilz.de

Thermistor monitor
S1MN

Timing diagram

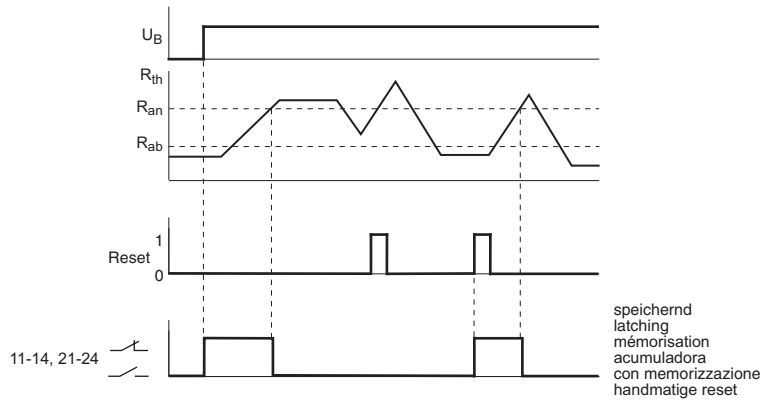

Key

- U_B Supply voltage
- R_{on} Response value
- R_{off} Release value
- R_{th} PTC resistor

Connection example

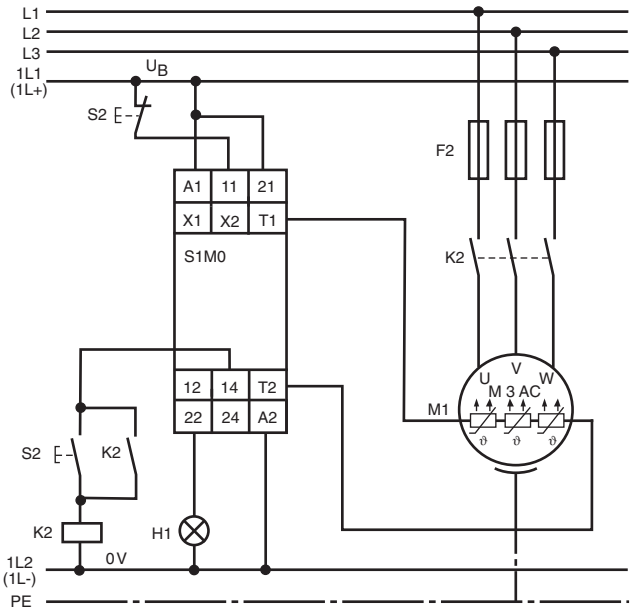

Thermistor monitor
S1MN

Technical details	S1MN
Electrical data	
Supply voltage	AC: 48, 110, 230, 240, 400 V AC/DC: 24 V
Tolerance	85 ... 110 %
Frequency range AC	50 ... 60 Hz
Power consumption	AC: ca. 3.5 VA, DC: 2 W
Utilisation category in accordance with EN 60947-4-1 EN 60947-5-1	 AC1: 240 V/0.1 ... 5 A/1200 VA DC1: 24 V/0.1 ... 5 A/120 W AC15: 230 V/2 A; DC13: 24 V/1.5 A
Output contacts	2 auxiliary contacts (2 C/O)
Contact material	AgCdO, 3 µm gold plating for low load range 1-50 V/1-100 mA
Contact fuse protection in accordance with EN 60947-5-1	Max. 6 A quick or max. 4 A slow
Measuring circuit	
Response value in the case of sensor short circuit	ca. 25 Ω
Delay-on energisation	ca. 500 ms
Response value	3.6 kΩ ± 10 %
Release value	1.8 kΩ ± 10 %
Cold resistance at 20 °C	Max. 1.5 kΩ
Environmental data	
EMC	EN 60947-5-1, EN 61000-6-2
Vibration in accordance with EN 60068-2-6	Frequency: 10 ... 55 Hz Amplitude: 0.35 mm
Climatic suitability	EN 60068-2-78
Airgap creepage	EN 60947-1
Ambient temperature	-10 ... +55 °C
Storage temperature	-40 ... +85 °C
Mechanical data	
Cross section of external conductors 1 core flexible 2 core with the same cross section, flexible with crimp connectors, no plastic sleeve without crimp connectors or with TWIN crimp connectors	 0.20 – 4.00 mm², 24 – 10 AWG 0.20 – 2.50 mm², 24 – 14 AWG 0.20 – 2.50 mm², 24 – 14 AWG
Torque setting for connection terminals	0.6 Nm (screws)
Mounting position	Any
Housing material Housing Front	 PPO UL 94 V0 ABS UL 94 V0
Protection types	Mounting: IP54 Housing: IP40 Terminals: IP20
Dimensions (H x W x D)	87 x 22.5 x 121 mm
Weight	AC: 160 g; DC: 120 g

Pilz GmbH & Co. KG, Felix-Wankel-Straße 2, 73760 Ostfildern, Germany
Telephone: +49 711 3409-0, Telefax: +49 711 3409-133, E-Mail: pilz.gmbh@pilz.de

Thermistor monitor
S1MN

Order reference

Type	U_B	Order no.
S1MN	24 VAC/DC	839 400
S1MN	48 VAC	839 405
S1MN	110 VAC	839 410
S1MN	230 VAC	839 415
S1MN	240 VAC	839 420
S1MN	400 VAC	839 425

U_B: Supply voltage
Additional versions on request

Thermistor monitor
S1M0



The S1MO thermistor monitoring relay is used as a protection device in temperature monitoring circuits in accordance with EN 44081. It protects motors, generators, storage areas, etc. from overheating.

Approvals

	S1M0
c UL us LISTED	◆
CCC	◆

UL approval only for unit types up to 240 VAC

Unit features

- For DC and AC supplies
- Normally energised mode
- Monitors sensor short circuits
- Non-volatile fault latching
- Manual reset via internal or external reset button

Description

The thermistor monitoring relay is enclosed in an S-95 slimline housing. There are 5 versions available for AC operation and one for AC and DC operation.
Features:

- Relay outputs: 2 auxiliary contacts (2 C/O)
- Measuring circuit for connecting a temperature sensor (PTC resistor)
- Monitors the temperature sensor for short circuit
- Reset button
- Connection option for external reset button
- Manual reset with non-volatile reset latch
- LED for supply voltage and fault

A temperature sensor is connected to the S1M0 measuring circuit. If the temperature exceeds a defined value, i.e. the resistance of the temperature sensor reaches the response value, the output contacts switch. Contacts 11-14 and 21-24 open, contacts 11-12 and 21-22 close. If the temperature then falls, i.e. the resistance of the temperature sensor reaches the release value, the unit can only be switched back on by pressing the reset button S1 (or the external reset button). The non-volatile reset latch prevents the unit from starting up again automatically after a fault, when the voltage fails and is then restored.

Pilz GmbH & Co. KG, Felix-Wankel-Straße 2, 73760 Ostfildern, Germany
Telephone: +49 711 3409-0, Telefax: +49 711 3409-133, E-Mail: pilz.gmbh@pilz.de
1001859-EN-01-2013-04

Thermistor monitor
S1M0

Internal wiring diagram

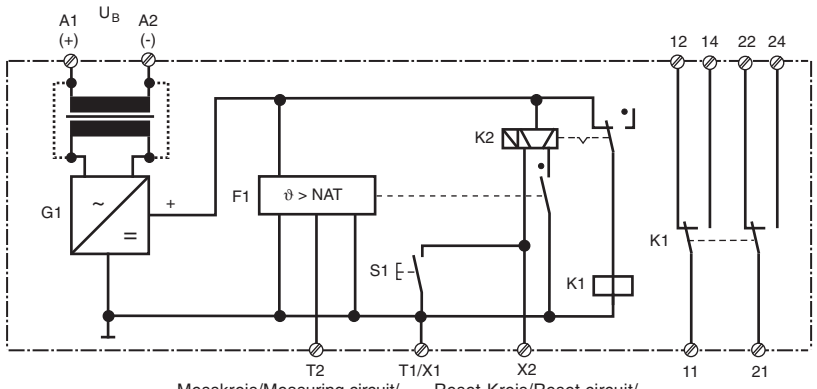

Thermistor monitor
S1M0

Timing diagram

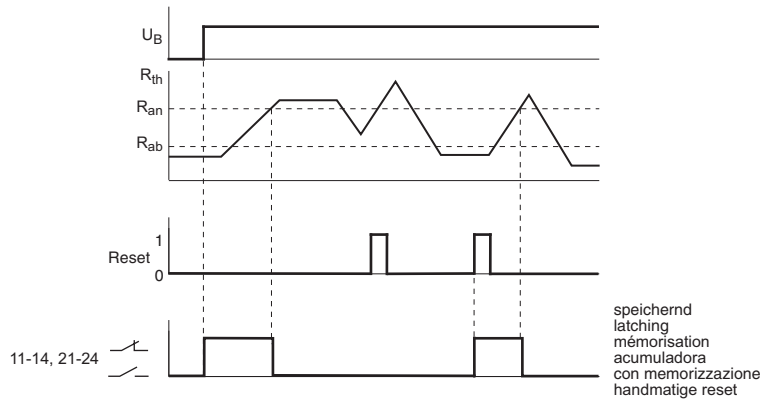

Key

- U_B Supply voltage
- R_{on} Response value
- R_{off} Release value
- R_{th} PTC resistor

Connection example

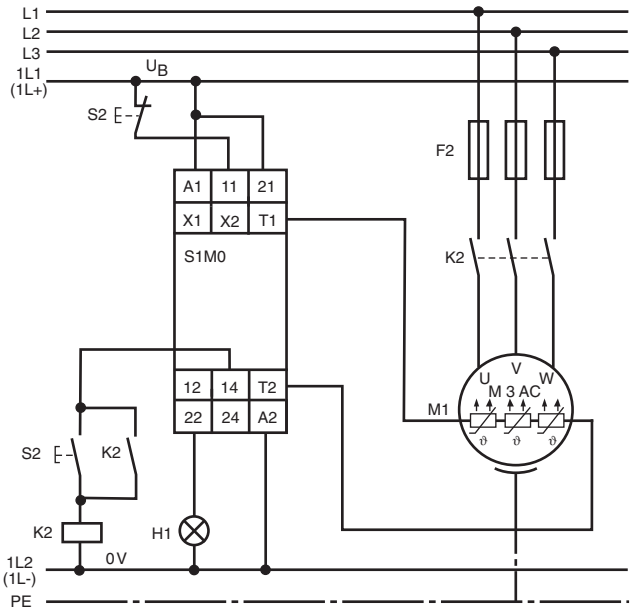

Pilz GmbH & Co. KG, Felix-Wankel-Straße 2, 73760 Ostfildern, Germany
Telephone: +49 711 3409-0, Telefax: +49 711 3409-133, E-Mail: pilz.gmbh@pilz.de

Thermistor monitor
S1M0

Technical details	S1M0
Electrical data	
Supply voltage	AC: 48, 110, 230, 240, 400 V AC/DC: 24 V
Tolerance	85 ... 110 %
Frequency range AC	50 ... 60 Hz
Power consumption	AC: ca. 3.5 VA, DC: 2 W
Utilisation category in accordance with EN 60947-4-1 EN 60947-5-1	 AC1: 240 V/0.1 ... 5 A/1200 VA DC1: 24 V/0.1 ... 5 A/120 W AC15: 230 V/2 A; DC13: 24 V/1.5 A
Output contacts	2 auxiliary contacts (2 C/O)
Contact material	AgCdO, 3 µm gold plating for low load range 1-50 V/1-100 mA
Contact fuse protection to EN 60947-5-1	Max. 6 A quick or max. 4 A slow
Measuring circuit	
Response value in the case of sensor short circuit	ca. 25 Ω
Delay-on energisation	ca. 500 ms
Response value	3.6 kΩ ± 10 %
Release value	1.8 kΩ ± 10 %
Cold resistance at 20 °C	Max. 1.5 kΩ
Environmental data	
EMC	EN 60947-5-1, EN 61000-6-2
Vibration in accordance with EN 60068-2-6	Frequency: 10 ... 55 Hz Amplitude: 0.35 mm
Climatic suitability	EN 60068-2-78
Airgap creepage	EN 60947-1
Ambient temperature	-10 ... +55 °C
Storage temperature	-40 ... +85 °C
Mechanical data	
Cross section of external conductors 1 core flexible 2 core with the same cross section, flexible with crimp connectors, no plastic sleeve without crimp connectors or with TWIN crimp connectors	 0.20 – 4.00 mm², 24 – 10 AWG 0.20 – 2.50 mm², 24 – 14 AWG 0.20 – 2.50 mm², 24 – 14 AWG
Torque setting for connection terminals	0.6 Nm (screws)
Mounting position	Any
Housing material Housing Front	 PPO UL 94 V0 ABS UL 94 V0
Protection types	Mounting: IP54 Housing: IP40 Terminals: IP20
Dimensions (H x W x D)	87 x 22.5 x 121 mm
Weight	AC: 160 g; DC: 120 g

Thermistor monitor
S1M0

Order reference

Type	U_B	Order no.
S1M0	24 VAC/DC	839 600
S1M0	48 VAC	839 620
S1M0	110 VAC	839 630
S1M0	230 VAC	839 650
S1M0	240 VAC	839 655
S1M0	400 VAC	839 660

U_B: Supply voltage
Additional versions on request

Pilz GmbH & Co. KG, Felix-Wankel-Straße 2, 73760 Ostfildern, Germany
Telephone: +49 711 3409-0, Telefax: +49 711 3409-133, E-Mail: pilz.gmbh@pilz.de

Standstill monitoring
S1SW P



The S1SW P standstill monitoring relay is used to monitor standstill on DC and three-phase motors.

Approvals

	S1SW P
CCC	◆

Unit features

- Standstill monitoring with and without rundown time
- Standstill threshold can be set
- Run-down monitoring time can be set
- Normally de-energised mode
- Measuring circuits are galvanically isolated
- No speed sensor is required
- Suitable for use with a frequency converter
- Potentiometer to adjust the switch-on threshold and monitoring time
- Slide switch to double the measuring range
- LEDs for relay's switch status, fault status and supply voltage

Description

The standstill monitoring relay is enclosed in an S-99 slimline housing with plug-in terminals.
Features:

- Relay outputs:
  Standstill: 1 auxiliary contact (C/O)
  Fault: 1 auxiliary contact (C/O)
- Operating modes:
  – Standstill monitoring without rundown monitoring
  – Standstill and rundown monitoring

The S1SW P monitors the rundown on a three-phase asynchronous machine with standstill detection. The regenerated voltage induced from the motor is measured; standstill is signalled (relay contact) if the value falls below a set threshold. A second relay signals a fault if the voltage does not fall below the set threshold within the set rundown monitoring time. The time measurement is started by closing a volt-free start contact (N/C contact on the motor contactor at Y3, Y4). The slide switches can be used to switch the measuring ranges.

Internal wiring diagram

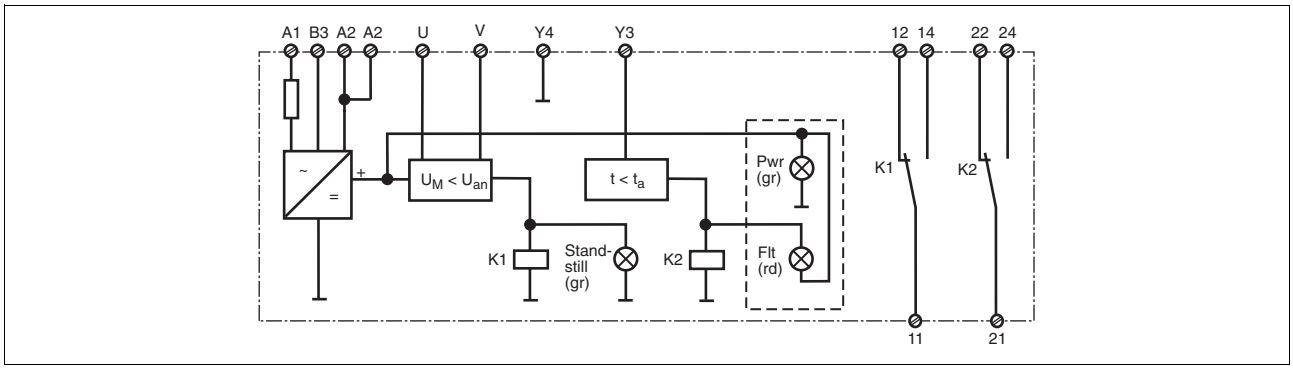

Key

- U_B at B3-A2: 24 VAC/DC
- U_B at A1-A2: 42 ... 240 VAC/DC

Standstill monitoring
S1SW P

Timing diagram

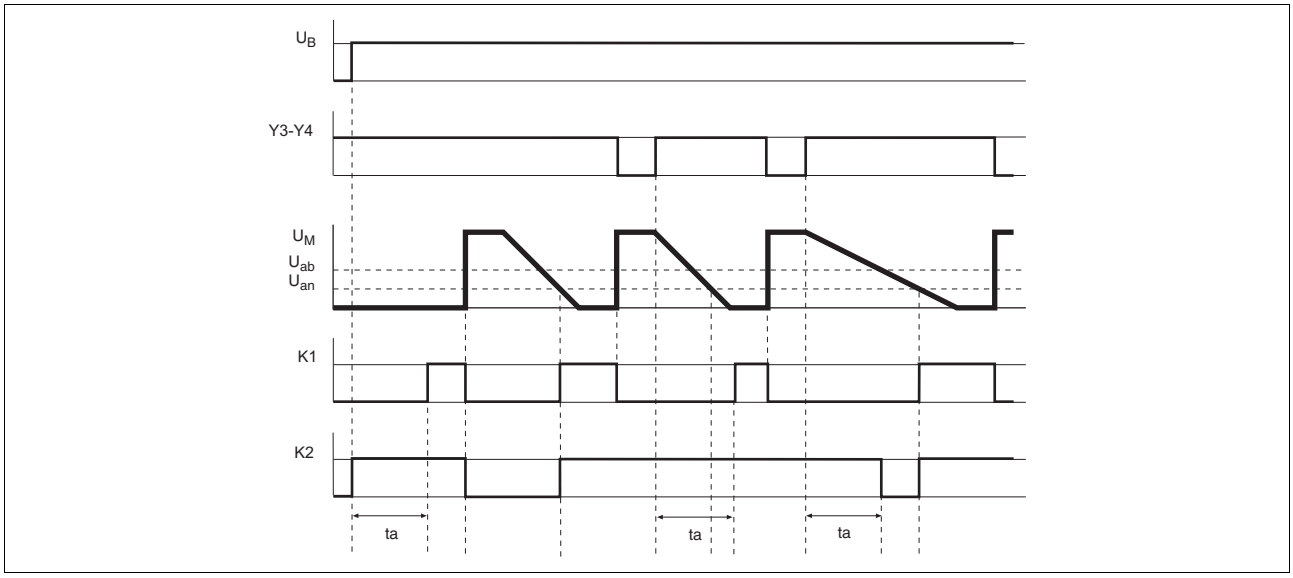

Key
- U_B Supply voltage
- Y3-Y4 Start contact

Connection examples

Example 1
Rundown time is not monitored,
supply voltage 24 V

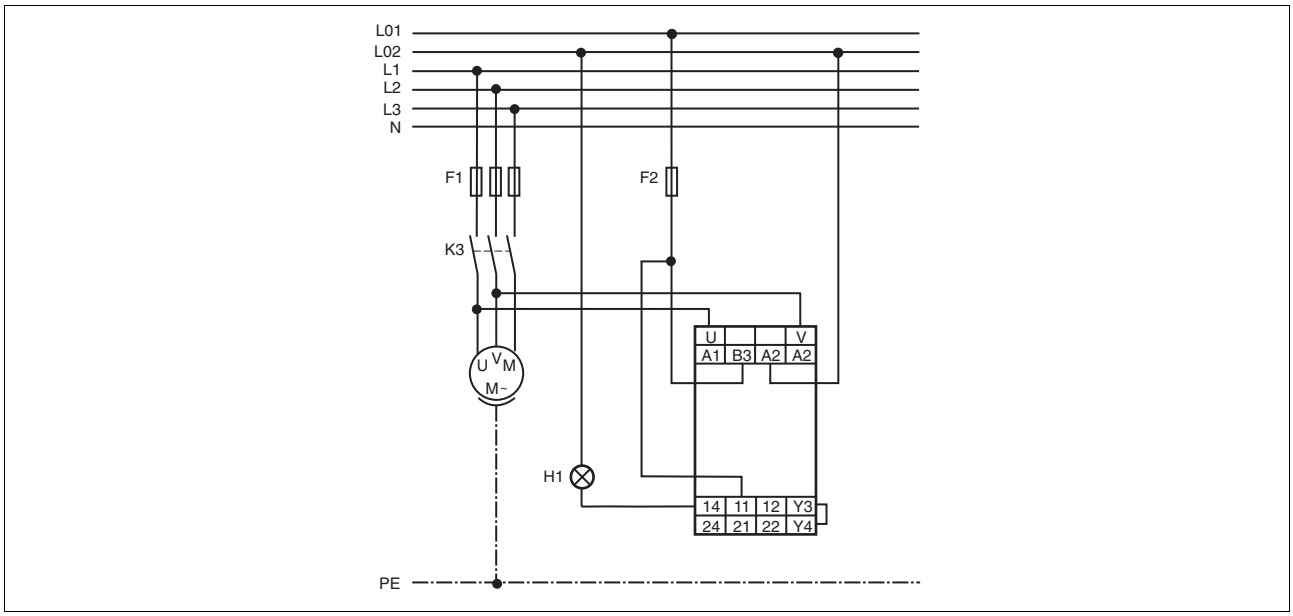

Pilz GmbH & Co. KG, Felix-Wankel-Straße 2, 73760 Ostfildern, Germany
Telephone: +49 711 3409-0, Telefax: +49 711 3409-133, E-Mail: pilz.gmbh@pilz.de

Standstill monitoring
S1SW P

Example 2
Rundown time is not monitored,
supply voltage 42 V and higher

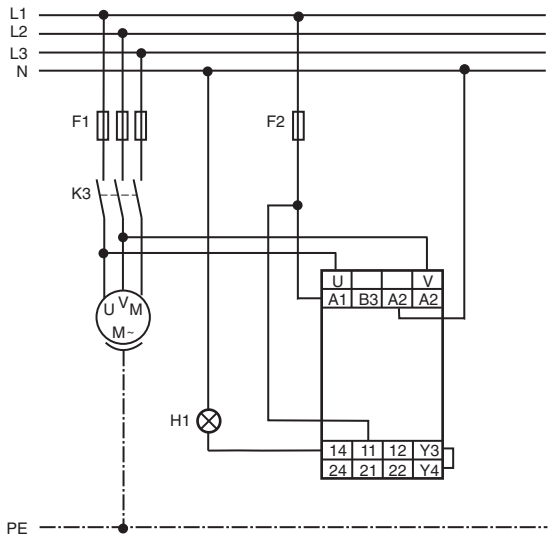

Example 3
Rundown time is monitored,
supply voltage 24 V

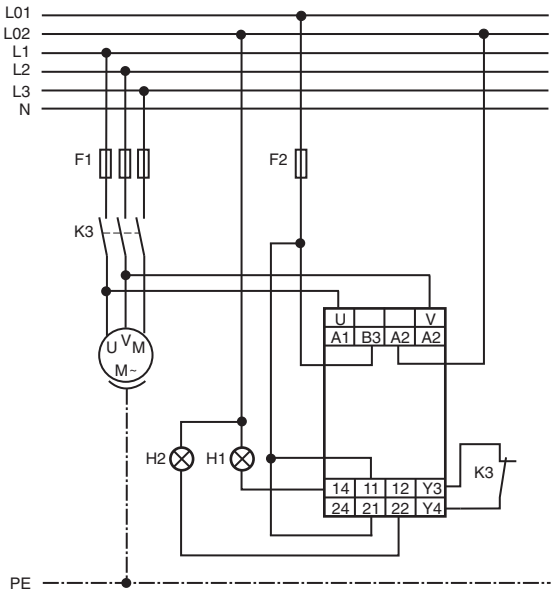

Standstill monitoring
S1SW P

Example 4
Rundown time is monitored,
supply voltage 42 V and higher

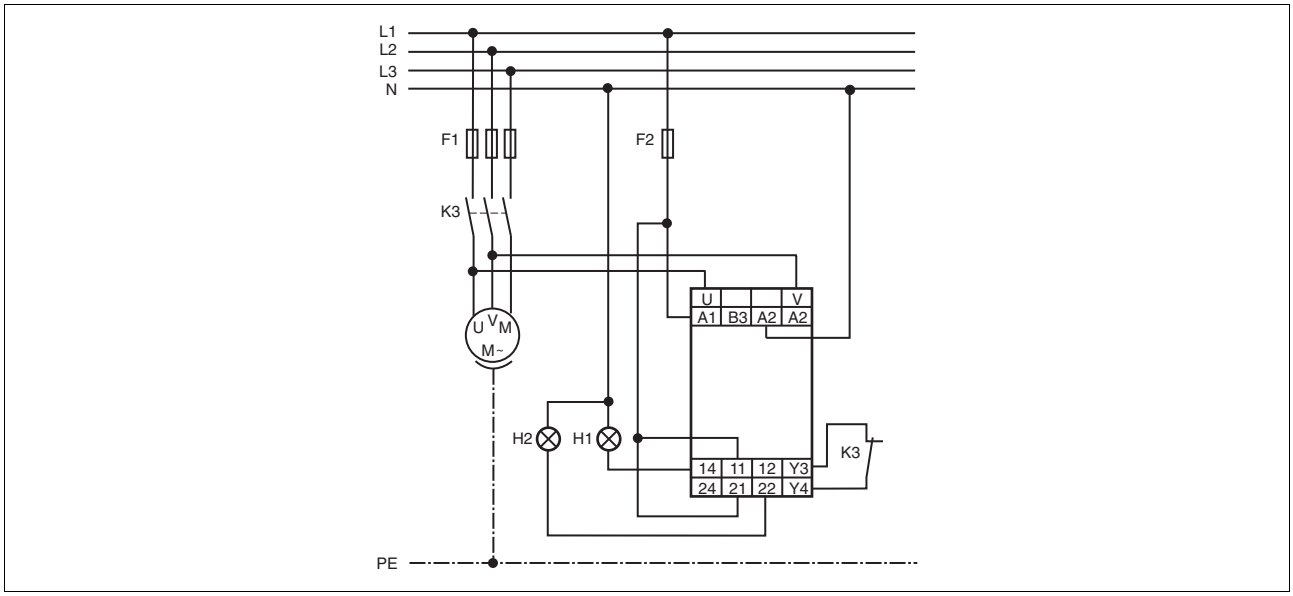

Technical details	S1SW P
Electrical data	
Supply voltage	AC/DC: 24 ... 240 V
Tolerance	85 ... 110 %
Frequency range AC	50 ... 60 Hz
Power consumption	AC: 5 VA, DC: 2.5 W
Utilisation category in accordance with EN 60947-4-1 EN 60947-5-1	 AC1: 240 V/0.1 ... 5 A/1200 VA DC1: 24 V/0.1 ... 5 A/120 W AC15: 230 V/2 A; DC13: 24 V/1.5 A
Output contacts	2 auxiliary contacts (2 C/O)
Contact material	AgCdO, 3 µm gold plating for low load range 1-50 V/1-100 mA
Contact fuse protection to EN 60947-5-1	Max. 6 A quick or max. 4 A slow
Measuring circuit	
Frequency range	0 ... 1000 Hz
Adjustable limit values for measuring ranges	0,02 ... 3 V 0,04 ... 6 V
Max. input voltage	AC/DC: 690 V
Impedance of the measuring inputs	5 MΩ
Rundown monitoring time	0 ... 30 s
Environmental data	
Vibration in accordance with EN 60068-2-6	Frequency: 10 ... 55 Hz Amplitude: 0.35 mm
Climatic suitability	EN 60068-2-78
Airgap creepage	EN 60947-1
Ambient temperature	-10 ... +55 °C
Storage temperature	-40 ... +85 °C

Pilz GmbH & Co. KG, Felix-Wankel-Straße 2, 73760 Ostfildern, Germany
Telephone: +49 711 3409-0, Telefax: +49 711 3409-133, E-Mail: pilz.gmbh@pilz.de

Standstill monitoring
S1SW P

Mechanical data	
Cross section of external conductors	
1 core flexible	0.20 - 4.00 mm^2, 24 – 10 AWG
2 core with the same cross section, flexible	
with crimp connectors, no plastic sleeve	0.20 – 2.50 mm^2, 24 – 14 AWG
without crimp connectors or with TWIN crimp connectors	0.20 – 2.50 mm^2, 24 – 14 AWG
Torque setting for connection terminals	0.6 Nm (screws)
Mounting position	Any
Housing material	
Housing	PPO UL 94 V0
Front	ABS UL 94 V0
Protection types	Mounting: IP54 Housing: IP40 Terminals: IP20
Dimensions (H x W x D)	94 x 22.5 x 121 mm
Weight	145 g

Order reference

Type	U_B	U_M	Order no.
S1SW P	24 - 240 VAC/DC	690 VAC/DC	407 710

U_B: Supply voltage
U_M: Measuring voltage

General details
Technical details



Technical details	
Unless stated otherwise in the unit-specific data	
Electrical data	
Frequency range AC	50 - 60 Hz
Residual ripple DC	160 %
Contact material	AgCdO
Duty cycle	100 %
Environmental data	
EMC	EN 50081-1, EN 50082-2
Vibration in accordance with EN 60068-2-6	Frequency: 10 - 55 Hz, Amplitude: 0.35 mm
Climatic suitability	EN 60068-2-78
Airgap creepage	EN 60947-1
Ambient temperature	-10…+55 °C
Storage temperature	-40…+85 °C
Mechanical data	
Torque setting for connection terminals	0.6 Nm (screws)
Mounting position	Any
Housing material	Thermoplastic Noryl SE 100
Protection types	Mounting: IP54 Housing: IP40 Terminals: IP20

Pilz GmbH & Co. KG, Felix-Wankel-Straße 2, 73760 Ostfildern, Germany
Telephone: +49 711 3409-0, Telefax: +49 711 3409-133, E-Mail: pilz.gmbh@pilz.de

General details
Dimensioned drawings, housing features

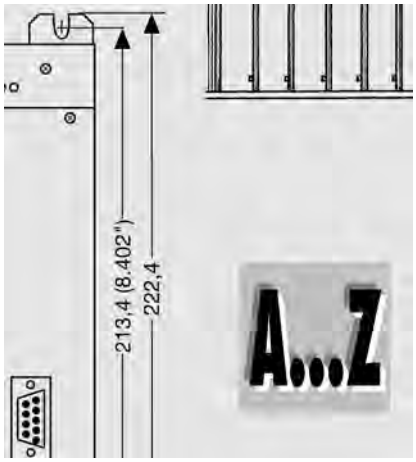

Housing features

Housing material: Noryl SE 100
- In accordance with UL 94 V1
- Fire-resistant
- Non-drip
- Self-extinguishing

Installation
- Can be clipped on to a DIN rail in accordance with DIN EN 50022 (DIN 46277, sheet 3)

Wiring connection
- Print terminals with pozidrive screws for
- Single-core
- Multi-core with crimp connectors

Dimensioned drawings (dimensions in mm)

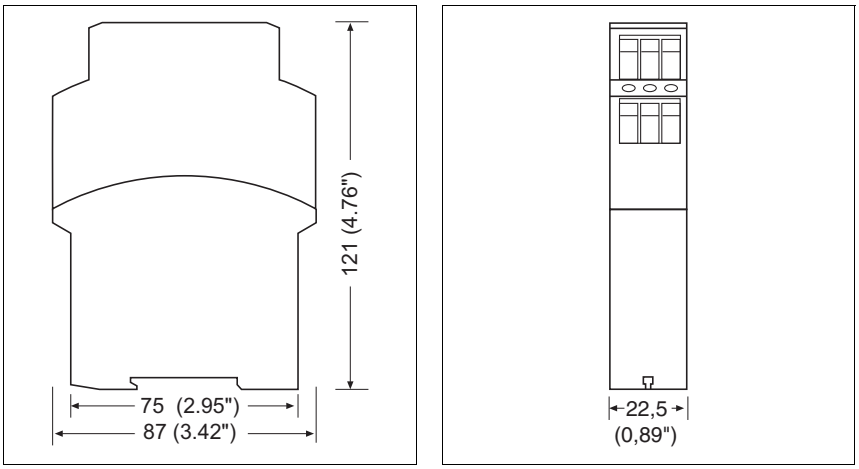

Fig.: S-95 housing: 22.5 mm wide

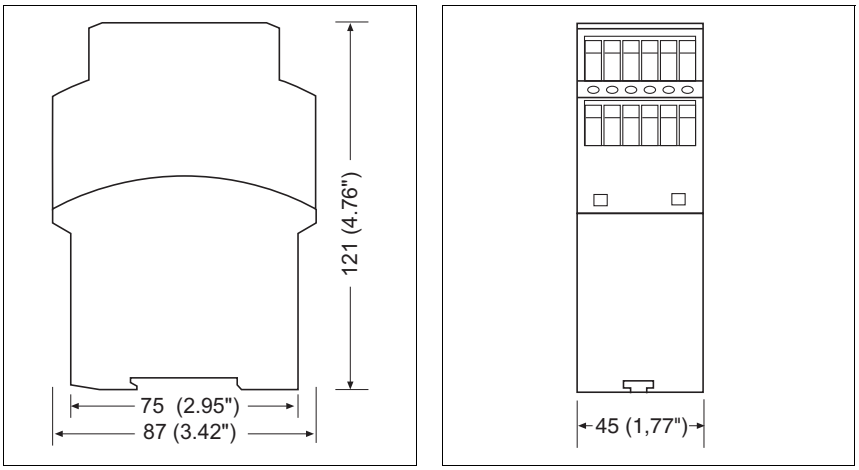

Fig.: P-93 housing: 45 mm wide

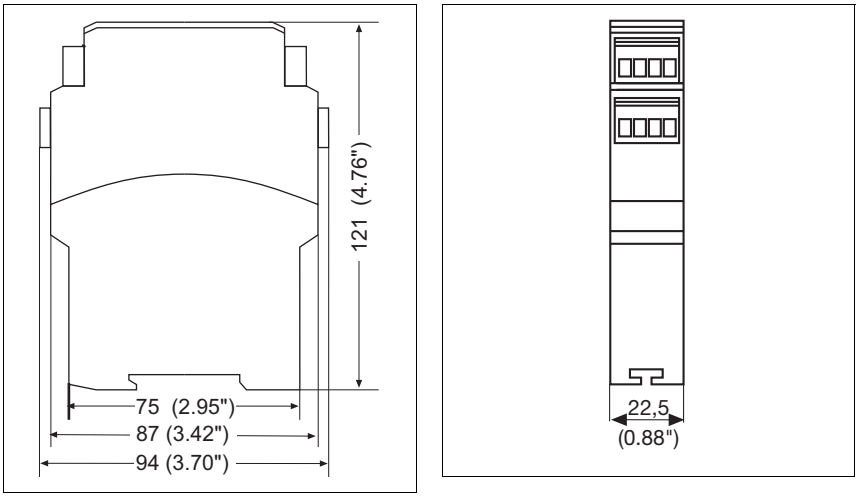

Fig.: S-99 housing: 22.5 mm wide

Pilz GmbH & Co. KG, Felix-Wankel-Straße 2, 73760 Ostfildern, Germany
Telephone: +49 711 3409-0, Telefax: +49 711 3409-133, E-Mail: pilz.gmbh@pilz.de

Contents	Page
Selection guide	from 2.1-1
Safety relays PNOZ X	from 2.2-1
Safety relays PNOZsigma	from 2.3-1

Pilz GmbH & Co. KG, Felix-Wankel-Straße 2, 73760 Ostfildern, Germany
Telephone: +49 711 3409-0, Telefax: +49 711 3409-133, E-Mail: pilz.gmbh@pilz.de

Selection guide

Contents	Page
Selection guide	
Safety relays PNOZ X	2.1-2
Safety relays PNOZsigma	2.1-4

Selection guide
Safety relays PNOZ X

Type	Application						Safety-related characteristic data				
							up to PL in acc. with EN ISO 13849-1	up to SIL CL in acc. with EN 62061	for application up to category (in acc. with EN 954-1)		
									2	3	4
PNOZ X1P	◆	◆					e	3	◆	◆	◆
PNOZ X2P	◆	◆					e	3	◆	◆	◆
PNOZ X2.1VP	◆	◆					d	3	◆	◆	
PNOZ X2.3P	◆	◆					e	3	◆	◆	◆
PNOZ X2.7P	◆	◆	◆				e	3	◆	◆	◆
PNOZ X2.8P	◆	◆	◆				e	3	◆	◆	◆
PNOZ X2.9P	◆	◆	◆				e	3	◆	◆	◆
PNOZ X3P	◆	◆	◆				e	3	◆	◆	◆
PNOZ X3.10P	◆	◆	◆				e	3	◆	◆	◆
PNOZ X7P	◆	◆					e	3	◆	◆	◆
PNOZ X8P	◆	◆	◆				e	3	◆	◆	◆
PNOZ X9P	◆	◆	◆				e	3	◆	◆	◆
PNOZ X10.11P	◆	◆	◆				e	3	◆	◆	◆
PNOZ X11P	◆	◆					e	3	◆	◆	◆
PNOZ XV1P	◆	◆	◆				e	3	◆	◆	◆
PNOZ XV2P	◆	◆					e	3	◆	◆	◆
PNOZ XV2.1P	◆	◆					e	3	◆	◆	◆
PNOZ XV3P	◆	◆	◆				e	3	◆	◆	◆
PNOZ XV3.1P	◆	◆	◆				e	3	◆	◆	◆
PMUT X1P	◆	◆	◆		◆				◆	◆	◆
P2HZ X1P				◆			e	3	EN 574, Type IIIC		
P2HZ X1.10P				◆			e	3	EN 574, Type IIIC		
P2HZ X4P				◆			e	3	EN 574, Type IIIC		
PSWZ X1P						◆	e	3	◆	◆	◆
PZE X4P	Contact expansion modules						e	3	As base unit		
PZE X4.1P	Contact expansion modules						e	3	As base unit		
PZE X4VP	Contact expansion modules						d	2	As base unit		
PZE X4VP4	Contact expansion modules						d	2	As base unit		
PZE X4VP8	Contact expansion modules						d	2	As base unit		
PZE X5P	Contact expansion modules						e	3	As base unit		
PZE 9P	Contact expansion modules						e	3	As base unit		

◆ Can be installed in this category

Pilz GmbH & Co. KG, Felix-Wankel-Straße 2, 73760 Ostfildern, Germany
Telephone: +49 711 3409-0, Telefax: +49 711 3409-133, E-Mail: pilz.gmbh@pilz.de

Selection guide
Safety relays PNOZ X

Type	Output contacts					Universal power supply	Housing width in mm	Page
	safe		not safe					
								
PNOZ X1P	3			1			22,5	2.2-2
PNOZ X2P	2					◆	22,5	2.2-11
PNOZ X2.1VP	2	◆			1		22,5	2.2-20
PNOZ X2.3P	3						22,5	2.2-29
PNOZ X2.7P	3			1		◆	22,5	2.2-38
PNOZ X2.8P	3			1		◆	22,5	2.2-48
PNOZ X2.9P	3			1			22,5	2.2-59
PNOZ X3P	3			1	1	◆	45	2.2-68
PNOZ X3.10P	3			1	1		45	2.2-78
PNOZ X7P	2						22,5	2.2-87
PNOZ X8P	3			2	2		45	2.2-97
PNOZ X9P	7			2	2	◆	90	2.2-107
PNOZ X10.11P	6			4			90	2.2-117
PNOZ X11P	7			1	2		90	2.2-126
PNOZ XV1P	3	◆					22,5	2.2-135
PNOZ XV2P	4	◆					45	2.2-144
PNOZ XV2.1P	4	◆				◆	90	2.2-154
PNOZ XV3P	5	◆					45	2.2-164
PNOZ XV3.1P	5	◆		1		◆	90	2.2-174
PMUT X1P	3			1	5		90	2.2-185
P2HZ X1P	3			1	2		45	2.2-194
P2HZ X1.10P	3			1	2		45	2.2-202
P2HZ X4P	3			1			22,5	2.2-209
PSWZ X1P	2			1	1	◆	45	2.2-216
PZE X4P	4						22,5	2.2-224
PZE X4.1P	4						22,5	2.2-232
PZE X4VP	4						22,5	2.2-240
PZE X4VP4	4						45	2.2-248
PZE X4VP8	4						45	2.2-256
PZE X5P	5				2		45	2.2-264
PZE 9P	8			1		◆	90	2.2-272

◆ Can be installed in this category

Selection guide
Safety relays PNOZsigma

Type	Application					Safety-related characteristic data				
						up to PL in acc. with EN ISO 13849-1	up to SIL CL in acc. with EN 62061	for application up to category (in acc. with EN 954-1)		
								2	3	4
PNOZ s1	◆	◆				c	2	◆	◆	
PNOZ s2	◆	◆				e	3	◆	◆	◆
PNOZ s3	◆	◆	◆			e	3	◆	◆	◆
PNOZ s4	◆	◆	◆			e	3	◆	◆	◆
PNOZ s4.1	◆	◆	◆			e	3	◆	◆	◆
PNOZ s5	◆	◆	◆			e	3	◆	◆	◆
PNOZ s6				◆		e	3	EN 574, Type IIIC		
PNOZ s6.1				◆		c	1	EN 574, Type IIIA		
PNOZ s7	Contact expansion modules					e	3	As base unit		
PNOZ s7.1	Contact expansion modules					e	3	As base unit		
PNOZ s7.2	Contact expansion modules					e	3	As base unit		
PNOZ s8	Contact expansion modules					c	2	As base unit (max. Category 3)		
PNOZ s9	Contact expansion modules				◆	e	3	As base unit		
PNOZ s10	Contact expansion modules					e	3	As base unit		
PNOZ s11	Contact expansion modules					e	3	As base unit		
PNOZ s22	Contact expansion modules					e	3	As base unit		
PNOZ s30	Speed monitors					e	3	◆	◆	

◆ Can be installed in this category

Pilz GmbH & Co. KG, Felix-Wankel-Straße 2, 73760 Ostfildern, Germany
Telephone: +49 711 3409-0, Telefax: +49 711 3409-133, E-Mail: pilz.gmbh@pilz.de

Selection guide
Safety relays PNOZsigma

Type	Output contacts				Universal power supply	Housing width in mm	Page
	safe		not safe				
							
PNOZ s1	2			1		12,5	2.3-2
PNOZ s2	3		1	1		17,5	2.3-10
PNOZ s3	2			1		17,5	2.3-19
PNOZ s4	3		1	1	◆	22,5	2.3-28
PNOZ s4.1	3		1	1	◆	22,5	2.3-38
PNOZ s5	2	2		1	◆	22,5	2.3-47
PNOZ s6	3		1	1	◆	22,5	2.3-58
PNOZ s6.1	3		1	1	◆	22,5	2.3-67
PNOZ s7	4		1			17,5	2.3-78
PNOZ s7.1	3					17,5	2.3-86
PNOZ s7.2	4		1			17,5	2.3-97
PNOZ s8	2			1		12,5	2.3-107
PNOZ s9	3	◆	1			17,5	2.3-137
PNOZ s10	4		1			45	2.3-114
PNOZ s11	8		1			45	2.3-122
PNOZ s22	6		2			22,5	2.3-130
PNOZ s30	2		2	4		45	2.3-148

◆ Can be installed in this category

Pilz GmbH & Co. KG, Felix-Wankel-Straße 2, 73760 Ostfildern, Germany
Telephone: +49 711 3409-0, Telefax: +49 711 3409-133, E-Mail: pilz.gmbh@pilz.de

Contents		Page
Safety relays PNOZ X		
E-STOP relays, safety gate monitors		
	PNOZ X1P	2.2-2
	PNOZ X2P	2.2-11
	PNOZ X2.1VP	2.2-20
	PNOZ X2.3P	2.2-29
	PNOZ X2.7P	2.2-38
	PNOZ X2.8P	2.2-48
	PNOZ X2.9P	2.2-59
	PNOZ X3P	2.2-68
	PNOZ X3.10P	2.2-78
	PNOZ X7P	2.2-87
	PNOZ X8P	2.2-97
	PNOZ X9P	2.2-107
	PNOZ X10.11P	2.2-117
	PNOZ X11P	2.2-126
	PNOZ XV1P	2.2-135
	PNOZ XV2P	2.2-144
	PNOZ XV2.1P	2.2-154
	PNOZ XV3P	2.2-164
	PNOZ XV3.1P	2.2-174
Muting controller		
	PMUT X1P	2.2-185
Two-hand control devices		
	P2HZ X1P	2.2-194
	P2HZ X1.10P	2.2-202
	P2HZ X4P	2.2-209
Safe monitoring relays		
	PSWZ X1P	2.2-216
Contact expansion		
	PZE X4P	2.2-224
	PZE X4.1P	2.2-232
	PZE X4VP	2.2-240
	PZE X4VP4	2.2-248
	PZE X4VP8	2.2-256
	PZE X5P	2.2-264
	PZE 9P	2.2-272

Up to PL e of EN ISO 13849-1
PNOZ X1P



Safety relay for monitoring E-STOP pushbuttons

Approvals

	PNOZ X1P
c UL us LISTED	◆
TÜV SÜD	◆
CCC	◆

Unit features

- Positive-guided relay outputs:
  - 3 safety contacts (N/O), instantaneous
  - 1 auxiliary contact (N/C), instantaneous
- Connection options for:
  - E-STOP pushbutton
  - Reset button
- LED indicator for:
  - Switch status channel 1/2
  - Supply voltage
- Plug-in connection terminals (either spring-loaded terminal or screw terminal)

Unit description

The safety relay is not suitable for non-contact barriers because
- a dynamic start is not possible

The safety relay meets the requirements of EN 60947-5-1, EN 60204-1 and VDE 0113-1 and may be used in applications with
- E-STOP pushbuttons
- Safety gates

Safety features

The relay meets the following safety requirements:
- The circuit is redundant with built-in self-monitoring.
- The safety function remains effective in the case of a component failure.
- The correct opening and closing of the safety function relays is tested automatically in each on-off cycle.

Block diagram

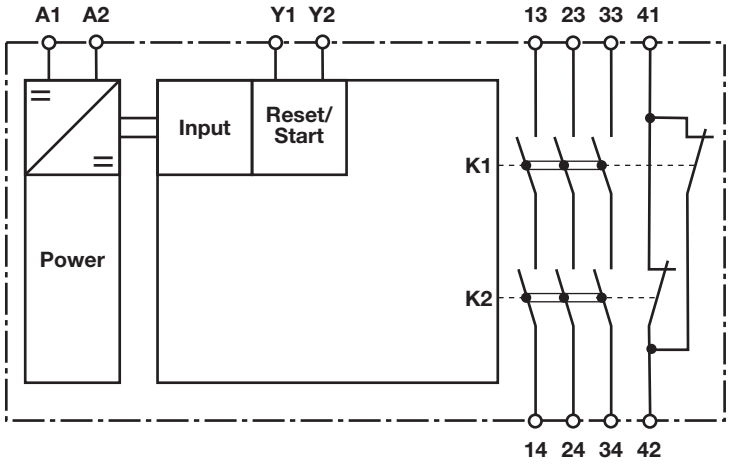

Pilz GmbH & Co. KG, Felix-Wankel-Straße 2, 73760 Ostfildern, Germany
Telephone: +49 711 3409-0, Telefax: +49 711 3409-133, E-Mail: pilz.gmbh@pilz.de

Up to PL e of EN ISO 13849-1
PNOZ X1P

Function description

- Single-channel operation: no redundancy in the input circuit, earth faults in the reset circuit are detected.
- Automatic start: Unit is active once the input circuit has been closed.
- Manual reset: Unit is active once the input circuit is closed and then the reset circuit is closed.
- Increase in the number of available instantaneous safety contacts by connecting contact expansion modules or external contactors.

Timing diagram

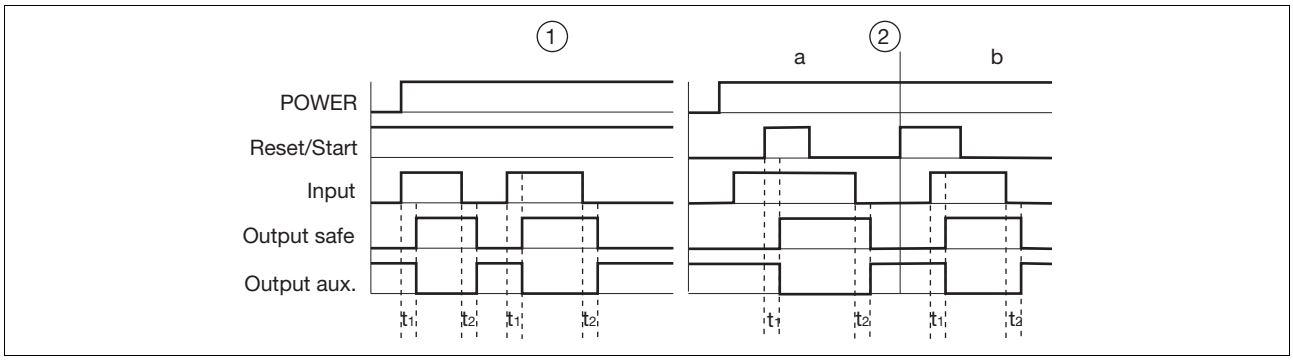

Key

- Power: Supply voltage
- Reset/start: Reset circuit Y1-Y2
- Input: Input circuits A1
- Output safe: Safety contacts 13-14, 23-24, 33-34
- Output aux: Auxiliary contacts 41-42
- ①: Automatic reset
- ②: Manual reset
- a: Input circuit closes before reset circuit
- b: Reset circuit closes before input circuit
- t_1: Switch-on delay
- t_2: Delay-on de-energisation

Wiring

Please note:

- Information given in the “Technical details” must be followed.
- Outputs 13-14, 23-24, 33-34 are safety contacts, output 41-42 is an auxiliary contact (e.g. for display).
- To prevent contact welding, a fuse should be connected before the output contacts (see technical details).
- Calculation of the max. cable runs I_{max} in the input circuit:

$$I_{max} = \frac{R_{lmax}}{R_l / km}$$

R_{lmax} = max. overall cable resistance (see technical details)
R_l /km = cable resistance/km

- Use copper wire that can withstand 60/75 °C.
- Sufficient fuse protection must be provided on all output contacts with capacitive and inductive loads.

Pilz GmbH & Co. KG, Felix-Wankel-Straße 2, 73760 Ostfildern, Germany
Telephone: +49 711 3409-0, Telefax: +49 711 3409-133, E-Mail: pilz.gmbh@pilz.de

1001997-EN-02-2011-11

Up to PL e of EN ISO 13849-1
PNOZ X1P

Preparing for operation

- Supply voltage

Supply voltage	AC	DC
		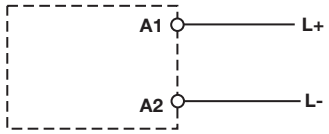

- Input circuit

Input circuit	Single-channel	Dual-channel
E-STOP **without** detection of shorts across contacts	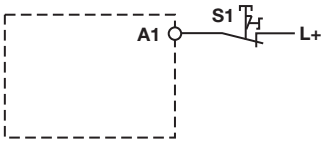	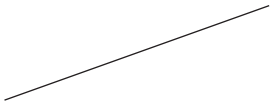
Safety gate **without** detection of shorts across contacts	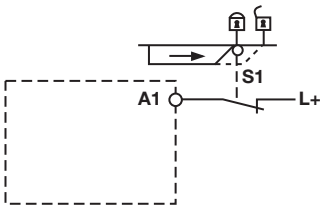	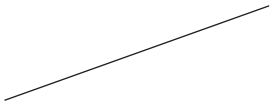

- Reset circuit

Reset circuit	E-STOP wiring (single-channel) Safety gate (single-channel)	E-STOP wiring (dual-channel) Safety gate (dual-channel)
Automatic reset		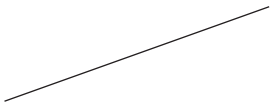
Manual reset	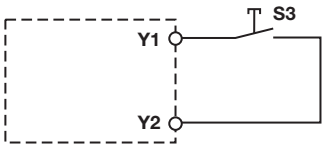	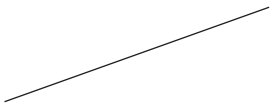

Pilz GmbH & Co. KG, Felix-Wankel-Straße 2, 73760 Ostfildern, Germany
Telephone: +49 711 3409-0, Telefax: +49 711 3409-133, E-Mail: pilz.gmbh@pilz.de

Up to PL e of EN ISO 13849-1
PNOZ X1P

- Feedback loop

Feedback loop	Automatic reset	Manual reset
Contacts from external contactors	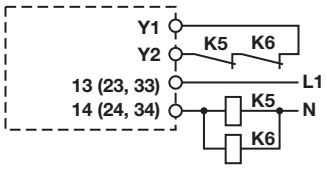	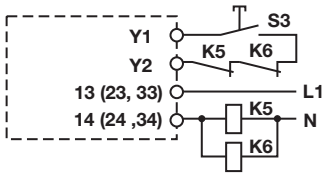

- Key

S1	E-STOP pushbutton
S3	Reset button
	Switch operated
	Gate open
	Gate closed

Up to PL e of EN ISO 13849-1
PNOZ X1P

Terminal configuration

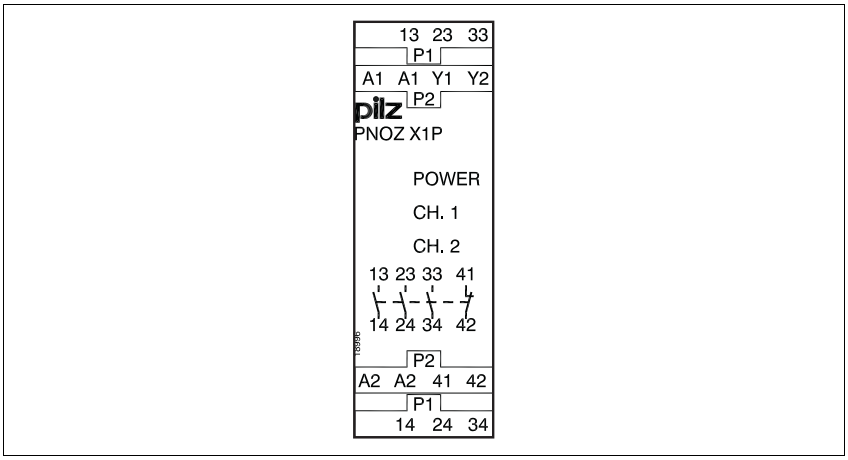

Installation

- The safety relay should be installed in a control cabinet with a protection type of at least IP54.
- Use the notch on the rear of the unit to attach it to a DIN rail.
- Ensure the unit is mounted securely on a vertical DIN rail (35 mm) by using a fixing element (e.g. retaining bracket or an end angle).

Dimensions

* with spring-loaded terminals

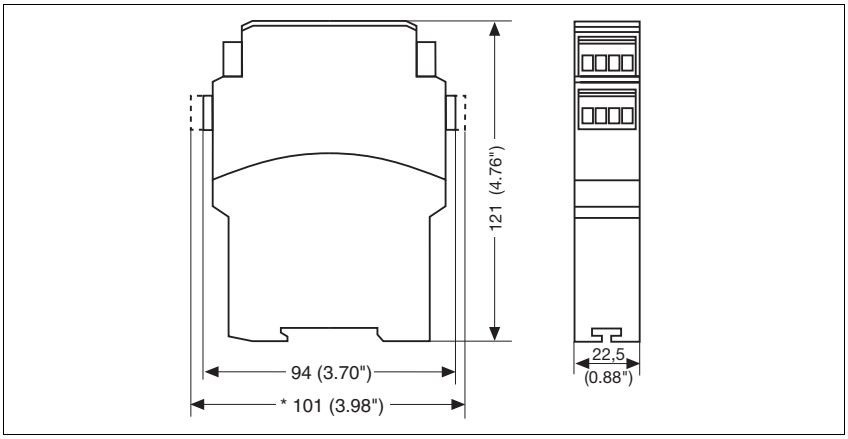

Pilz GmbH & Co. KG, Felix-Wankel-Straße 2, 73760 Ostfildern, Germany
Telephone: +49 711 3409-0, Telefax: +49 711 3409-133, E-Mail: pilz.gmbh@pilz.de

Up to PL e of EN ISO 13849-1
PNOZ X1P

Notice

This data sheet is only intended for use during configuration. Please refer to the operating manual for installation and operation.

Service life graph

The service life graphs indicate the number of cycles from which failures due to wear must be expected. The wear is mainly caused by the electrical load; the mechanical load is negligible.

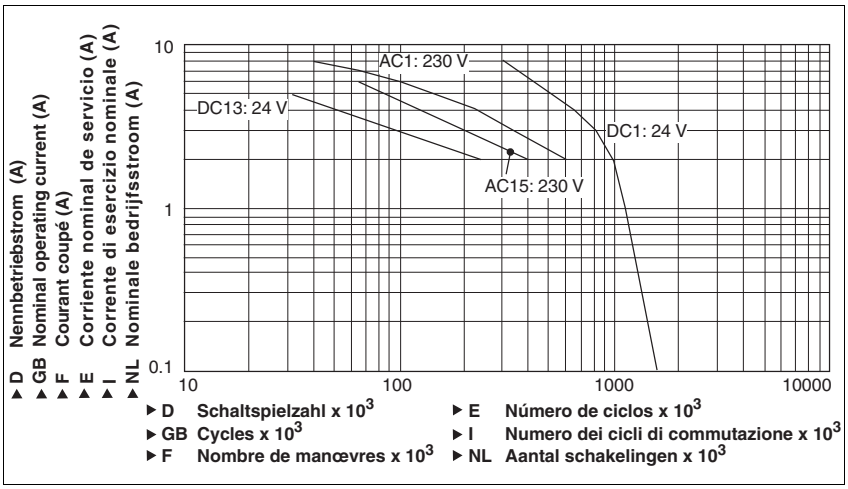

Example
- Inductive load: 2 A
- Utilisation category: AC15
- Contact service life: 400 000 cycles

Provided the application requires fewer than 400 000 cycles, the PFH value (see technical details) can be used in the calculation.

To increase the service life, sufficient spark suppression must be provided on all output contacts. With capacitive loads, any power surges that occur must be noted. With contactors, use freewheel diodes for spark suppression.

Technical details

Electrical data	
Supply voltage	
Supply voltage U_B DC	**24 V**
Voltage tolerance	**-15 %/+10 %**
Power consumption at U_B DC	**1.5 W**
Residual ripple DC	**160 %**
Voltage and current at	
Input circuit DC: **24.0 V**	**45.0 mA**
Reset circuit DC: **24.0 V**	**45.0 mA**
Feedback loop DC: **24.0 V**	**45.0 mA**
Number of output contacts	
Safety contacts (S) instantaneous:	**3**
Auxiliary contacts (N/C):	**1**

Pilz GmbH & Co. KG, Felix-Wankel-Straße 2, 73760 Ostfildern, Germany
Telephone: +49 711 3409-0, Telefax: +49 711 3409-133, E-Mail: pilz.gmbh@pilz.de

Up to PL e of EN ISO 13849-1
PNOZ X1P

Electrical data	
Utilisation category in accordance with **EN 60947-4-1**	
Safety contacts: AC1 at **240 V**	I_{min}: **0.01 A** , I_{max}: **6.0 A** P_{max}: **1500 VA**
Safety contacts: DC1 at **24 V**	I_{min}: **0.01 A** , I_{max}: **6.0 A** P_{max}: **150 W**
Auxiliary contacts: AC1 at **240 V**	I_{min}: **0.01 A** , I_{max}: **6.0 A** P_{max}: **1500 VA**
Auxiliary contacts: DC1 at **24 V**	I_{min}: **0.01 A** , I_{max}: **6.0 A** P_{max}: **150 W**
Utilisation category in accordance with **EN 60947-5-1**	
Safety contacts: AC15 at **230 V**	I_{max}: **5.0 A**
Safety contacts: DC13 at **24 V** (6 cycles/min)	I_{max}: **4.0 A**
Auxiliary contacts: AC15 at **230 V**	I_{max}: **5.0 A**
Auxiliary contacts: DC13 at **24 V** (6 cycles/min)	I_{max}: **4.0 A**
Contact material	**AgSnO2 + 0.2 µm Au**
External contact fuse protection (I_K = 1 kA) to **EN 60947-5-1**	
Blow-out fuse, quick	
Safety contacts:	**6 A**
Auxiliary contacts:	**6 A**
Blow-out fuse, slow	
Safety contacts:	**4 A**
Auxiliary contacts:	**4 A**
Circuit breaker 24 VAC/DC, characteristic B/C	
Safety contacts:	**4 A**
Auxiliary contacts:	**4 A**
Max. overall cable resistance R_{lmax} input circuits, reset circuits	
single-channel at U_B DC	**30 Ohm**
Safety-related characteristic data	
PL in accordance with **EN ISO 13849-1: 2006**	**PL e** (**Cat. 4**)
Category in accordance with **EN 954-1**	**Cat. 4**
SIL CL in accordance with **EN IEC 62061**	**SIL CL 3**
PFH in accordance with **EN IEC 62061**	**2.31E-09**
SIL in accordance with **IEC 61511**	**SIL 3**
PFD in accordance with **IEC 61511**	**2.03E-06**
T_M [year] in accordance with **EN ISO 13849-1: 2006**	**20**
Times	
Switch-on delay	
with automatic reset typ.	**60 ms**
with automatic reset max.	**120 ms**
with manual reset typ.	**50 ms**
with manual reset max.	**120 ms**
Delay-on de-energisation	
with E-STOP typ.	**55 ms**
with E-STOP max.	**90 ms**
with power failure typ.	**55 ms**
with power failure max.	**90 ms**
Recovery time at max. switching frequency 1/s	
after E-STOP	**150 ms**
after power failure	**150 ms**
Supply interruption before de-energisation	**20 ms**
Environmental data	
EMC	**EN 60947-5-1**, **EN 61000-6-2**
Vibration to **EN 60068-2-6**	
Frequency	**10 - 55 Hz**
Amplitude	**0.35 mm**
Climatic suitability	**EN 60068-2-78**

Pilz GmbH & Co. KG, Felix-Wankel-Straße 2, 73760 Ostfildern, Germany
Telephone: +49 711 3409-0, Telefax: +49 711 3409-133, E-Mail: pilz.gmbh@pilz.de

Up to PL e of EN ISO 13849-1
PNOZ X1P

Environmental data	
Airgap creepage in accordance with **EN 60947-1**	
Pollution degree	**2**
Overvoltage category	**III**
Rated insulation voltage	**250 V**
Rated impulse withstand voltage	**4.00 kV**
Ambient temperature	**-10 - 55 °C**
Storage temperature	**-40 - 85 °C**
Protection type	
Mounting (e.g. cabinet)	**IP54**
Housing	**IP40**
Terminals	**IP20**
Mechanical data	
Housing material	
Housing	**PPO UL 94 V0**
Front	**ABS UL 94 V0**
Cross section of external conductors with screw terminals	
1 core flexible	**0.25 - 2.50 mm² , 24 - 12 AWG** No. 777100
2 core, same cross section, flexible:	
with crimp connectors, without insulating sleeve	**0.25 - 1.00 mm² , 24 - 16 AWG** No. 777100
without crimp connectors or with TWIN crimp connectors	**0.20 - 1.50 mm² , 24 - 16 AWG** No. 777100
Torque setting with screw terminals	**0.50 Nm** No. 777100
Cross section of external conductors with spring-loaded terminals: Flexible with/without crimp connectors	**0.20 - 1.50 mm² , 24 - 16 AWG** No. 787100
Spring-loaded terminals: Terminal points per connection	**2** No. 787100
Stripping length	**8 mm** No. 787100
Dimensions	
Height	**101.0 mm** No. 787100 **94.0 mm** No. 777100
Width	**22.5 mm**
Depth	**121.0 mm**
Weight	**200 g** No. 787100 **205 g** No. 777100

No. stands for order number.

It is essential to consider the relay's service life graphs. The relay outputs' safety-related characteristic data is only valid if the values in the service life graphs are met.

The PFH value depends on the switching frequency and the load on the relay output.
If the service life graphs are not accessible, the stated PFH value can be used irrespective of the switching frequency and the load, as the PFH value already considers the relay's B10d value as well as the failure rates of the other components.

All the units used within a safety function must be considered when calculating the safety characteristic data.

INFORMATION
A safety function's SIL/PL values are **not** identical to the SIL/PL values of the units that are used and may be different. We recommend that you use the PAScal software tool to calculate the safety function's SIL/PL values.

The standards current on **2004-09** apply.

Up to PL e of EN ISO 13849-1
PNOZ X1P

Conventional thermal current while loading several contacts

Number of contacts	I_{th} per contact at U_B DC
1	**6.00 A**
2	**6.00 A**
3	**4.50 A**

Order reference

Type	Features		Terminals	Order no.
PNOZ X1P C		24 VDC	Spring-loaded terminals	787 100
PNOZ X1P		24 VDC	Screw terminals	777 100

Pilz GmbH & Co. KG, Felix-Wankel-Straße 2, 73760 Ostfildern, Germany
Telephone: +49 711 3409-0, Telefax: +49 711 3409-133, E-Mail: pilz.gmbh@pilz.de

Up to PL e of EN ISO 13849-1
PNOZ X2P



Safety relay for monitoring E-STOP pushbuttons and safety gates.

Approvals

	PNOZ X2P
c UL us LISTED	◆
TÜV SÜD	◆
CCC	◆

Unit features

- Positive-guided relay outputs:
  - 2 safety contacts (N/O), instantaneous
- Connection options for:
  - E-STOP pushbutton
  - Safety gate limit switch
  - Reset button
- LED indicator for:
  - Switch status channel 1/2
  - Supply voltage
- Plug-in connection terminals (either spring-loaded terminal or screw terminal)
- See order reference for unit types

Unit Description

The safety relay meets the requirements of EN 60947-5-1, EN 60204-1 and VDE 0113-1 and may be used in applications with

- E-STOP pushbuttons
- Safety gates

Safety features

The relay meets the following safety requirements:

- The circuit is redundant with built-in self-monitoring.
- The safety function remains effective in the case of a component failure.
- The correct opening and closing of the safety function relays is tested automatically in each on-off cycle.

Block diagram

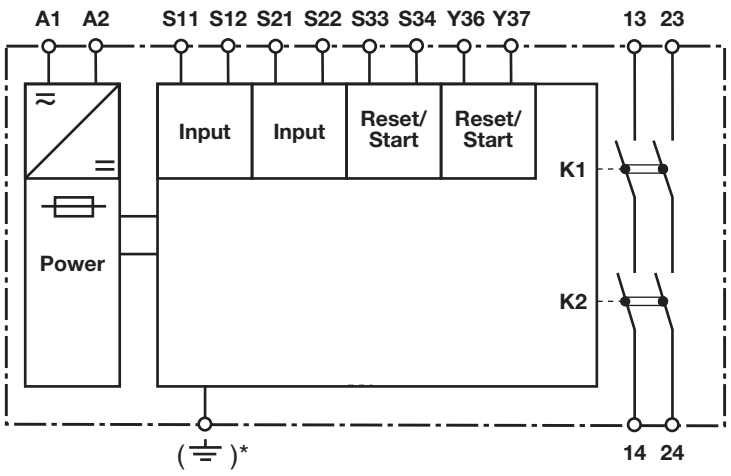

*only applicable for U_B 48 – 240 VAC/DC

Pilz GmbH & Co. KG, Felix-Wankel-Straße 2, 73760 Ostfildern, Germany
Telephone: +49 711 3409-0, Telefax: +49 711 3409-133, E-Mail: pilz.gmbh@pilz.de

Up to PL e of EN ISO 13849-1
PNOZ X2P

Function Description

- Single-channel operation: no redundancy in the input circuit, earth faults in the reset and input circuit are detected.
- Dual-channel operation with detection of shorts across contacts: redundant input circuit, detects
  - earth faults in the reset and input circuit,
  - short circuits in the input circuit and, with a monitored reset, in the reset circuit too,
  - shorts between contacts in the input circuit.
- Automatic start: Unit is active once the input circuit has been closed.
- Manual reset: Unit is active once the input circuit is closed and then the reset circuit is closed.
- Monitored reset: Unit is active once the input circuit is closed and once the reset circuit is closed after the waiting period has elapsed (see technical details).
- Increase in the number of available instantaneous safety contacts by connecting contact expansion modules or external contactors.

Timing diagram

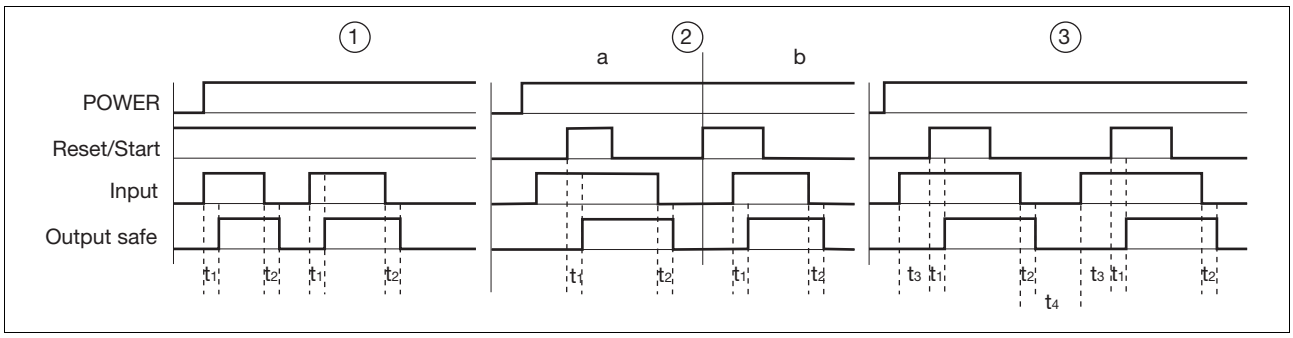

Key

- Power: Supply voltage
- Reset/Start: Reset circuit S33-S34, Y36-Y37
- Input: Input circuits S11-S12, S21-S22
- Output safe: Safety outputs 13-14, 23-24
- ①: Automatic reset
- ②: Manual reset
- ③: Monitored reset
- a: Input circuit closes before reset circuit
- b: Reset circuit closes before input circuit
- t_1: Switch-on delay
- t_2: Delay-on de-energisation
- t_3: Waiting period
- t_4: Recovery time

Wiring

Please note:

- Information given in the “Technical details” must be followed.
- Outputs 13-14, 23-24 are safety contacts.
- To prevent contact welding, a fuse should be connected before the output contacts (see technical details).
- Calculation of the max. cable runs l_{max} in the input circuit:

$$l_{max} = \frac{R_{lmax}}{R_l / km}$$

R_{lmax} = max. overall cable resistance (see technical details)
R_l /km = cable resistance/km

- Use copper wire that can withstand 60/75 °C.
- Sufficient fuse protection must be provided on all output contacts with capacitive and inductive loads.

Pilz GmbH & Co. KG, Felix-Wankel-Straße 2, 73760 Ostfildern, Germany
Telephone: +49 711 3409-0, Telefax: +49 711 3409-133, E-Mail: pilz.gmbh@pilz.de

Up to PL e of EN ISO 13849-1
PNOZ X2P

Preparing for operation

▸ Supply voltage

Supply voltage	AC	DC
U_B 24 VAC/DC	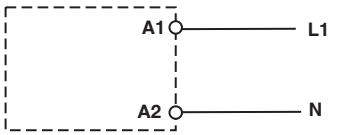	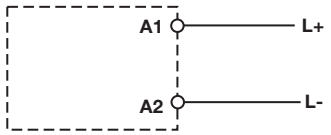
U_B 48 - 240 VAC/DC	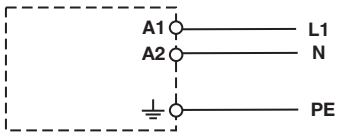	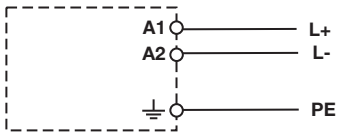

▸ Input circuit

Input circuit	Single-channel	Dual-channel
E-STOP **without** detection of shorts across contacts	(only when U_B 24 VAC/DC) 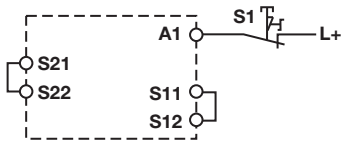	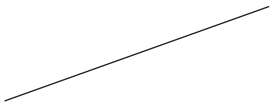
E-STOP **with** detection of shorts across contacts	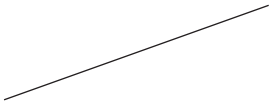	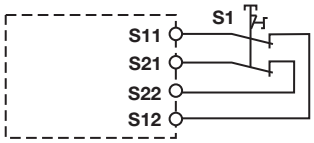
Safety gate **without** detection of shorts across contacts	(only when U_B 24 VAC/DC) 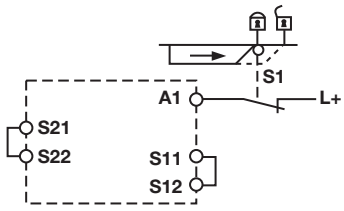	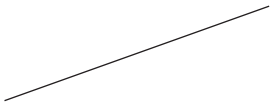
Safety gate **with** detection of shorts across contacts	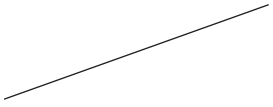	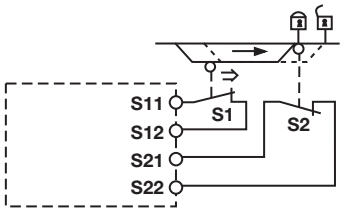

Up to PL e of EN ISO 13849-1
PNOZ X2P

▸ Reset circuit

Reset circuit	E-STOP wiring (single-channel) Safety gate (single-channel)	E-STOP wiring (dual-channel) Safety gate (dual-channel)
Automatic reset	(only when U_B 24 VAC/DC) 	
Manual reset	(only when U_B 24 VAC/DC) 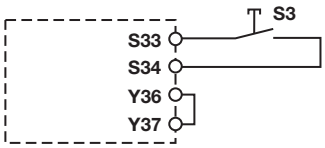	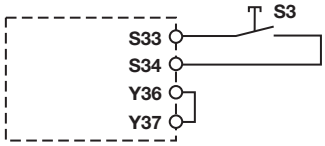
Monitored reset	(only when U_B 24 VAC/DC) 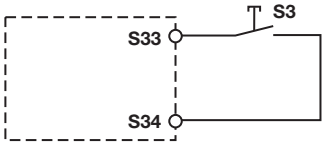	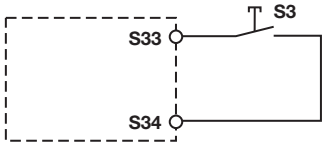

▸ Feedback circuit

Feedback circuit	Automatic reset	Monitored reset
Contacts from external contactors	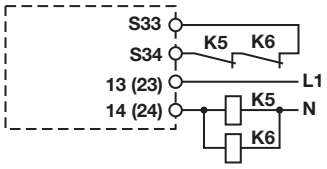	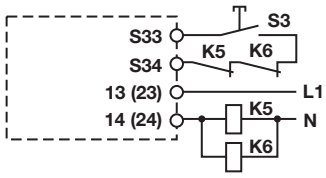

▸ Key

S1/S2	E-STOP/safety gate switch
S3	Reset button
	Switch operated
	Gate open
	Gate closed

Pilz GmbH & Co. KG, Felix-Wankel-Straße 2, 73760 Ostfildern, Germany
Telephone: +49 711 3409-0, Telefax: +49 711 3409-133, E-Mail: pilz.gmbh@pilz.de

Up to PL e of EN ISO 13849-1
PNOZ X2P

Terminal configuration

U_B 24 VAC/DC

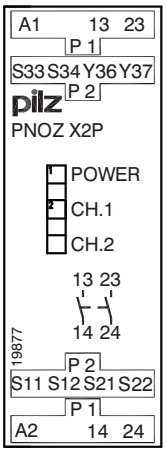

U_B 48 - 240 VAC/DC

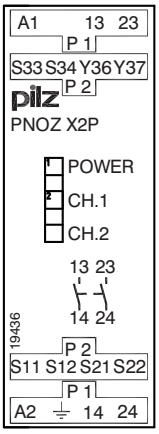

Installation

- The safety relay should be installed in a control cabinet with a protection type of at least IP54.
- Use the notch on the rear of the unit to attach it to a DIN rail.
- Ensure the unit is mounted securely on a vertical DIN rail (35 mm) by using a fixing element (e.g. retaining bracket or an end angle).

Dimensions

* with spring-loaded terminals

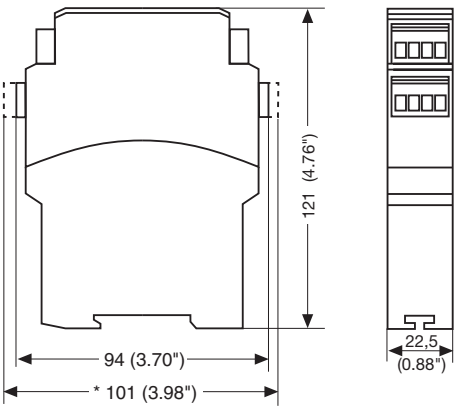

Up to PL e of EN ISO 13849-1
PNOZ X2P

Notice

This data sheet is only intended for use during configuration. Please refer to the operating manual for installation and operation.

Service life trend

The service life graphs indicate the number of cycles from which failures due to wear must be expected. The wear is mainly caused by the electrical load; the mechanical load is negligible.

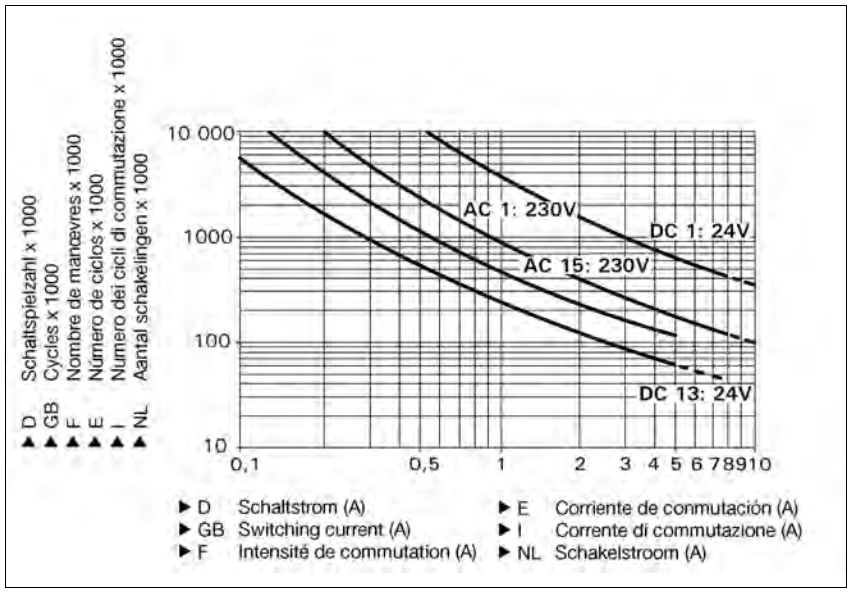

Example
- Inductive load: 0,2 A
- Utilisation category: AC15
- Contact service life: 4,000,000 cycles

Provided the application requires fewer than 4,000,000 cycles, the PFH value (see technical details) can be used in the calculation.

To increase the service life, sufficient spark suppression must be provided on all output contacts. With capacitive loads, any power surges that occur must be noted. With contactors, use freewheel diodes for spark suppression.

Technical details

Electrical data	
Supply voltage	
Supply voltage U_B AC/DC	**24 V**, **48 - 240 V**
Voltage tolerance	**-15 %/+10 %**
Power consumption at U_B AC	**3.5 VA** No. 777307, 787307 **4.5 VA** No. 777303, 787303
Power consumption at U_B DC	**1.0 W** No. 777307, 787307 **2.0 W** No. 777303, 787303
Frequency range AC	**50 - 60 Hz**
Residual ripple DC	**160 %**

Pilz GmbH & Co. KG, Felix-Wankel-Straße 2, 73760 Ostfildern, Germany
Telephone: +49 711 3409-0, Telefax: +49 711 3409-133, E-Mail: pilz.gmbh@pilz.de

Up to PL e of EN ISO 13849-1
PNOZ X2P

Electrical data	
Voltage and current at	
Input circuit DC: **24.0 V**	**15.0 mA** No. 777307, 787307 **25.0 mA** No. 777303, 787303
Reset circuit DC: **24.0 V**	**25.0 mA** No. 777307, 787307 **50.0 mA** No. 777303, 787303
Feedback loop DC: **24.0 V**	**25.0 mA** No. 777307, 787307 **50.0 mA** No. 777303, 787303
Number of output contacts	
Safety contacts (S) instantaneous:	**2**
Utilisation category in accordance with **EN 60947-4-1**	
Safety contacts: AC1 at **240 V**	I_{min}: **0.01 A** , I_{max}: **6.0 A** P_{max}: **1500 VA**
Safety contacts: DC1 at **24 V**	I_{min}: **0.01 A** , I_{max}: **6.0 A** P_{max}: **150 W**
Utilisation category in accordance with **EN 60947-5-1**	
Safety contacts: AC15 at **230 V**	I_{max}: **5.0 A**
Safety contacts: DC13 at **24 V** (6 cycles/min)	I_{max}: **4.0 A**
Contact material	**AgSnO2 + 0.2 µm Au**
External contact fuse protection (I_K = 1 kA) to **EN 60947-5-1**	
Blow-out fuse, quick	
Safety contacts:	**6 A**
Blow-out fuse, slow	
Safety contacts:	**4 A**
Circuit breaker 24 VAC/DC, characteristic B/C	
Safety contacts:	**4 A**
Max. overall cable resistance R_{lmax} input circuits, reset circuits	
single-channel at U_B DC	**100 Ohm** No. 777307, 787307 **150 Ohm** No. 777303, 787303
single-channel at U_B AC	**100 Ohm** No. 777307, 787307 **50 Ohm** No. 777303, 787303
dual-channel with detect. of shorts across contacts at U_B DC	**100 Ohm** No. 777307, 787307 **15 Ohm** No. 777303, 787303
dual-channel with detect. of shorts across contacts at U_B AC	**100 Ohm** No. 777307, 787307 **30 Ohm** No. 777303, 787303
Min. input resistance when switching on	**19 Ohm** No. 777307, 787307 **21 Ohm** No. 777303, 787303
Safety-related characteristic data	
PL in accordance with **EN ISO 13849-1: 2006**	**PL e** (**Cat. 4**)
Category in accordance with **EN 954-1**	**Cat. 4**
SIL CL in accordance with **EN IEC 62061**	**SIL CL 3**
PFH in accordance with **EN IEC 62061**	**2.31E-09**
SIL in accordance with **IEC 61511**	**SIL 3**
PFD in accordance with **IEC 61511**	**2.03E-06**
T_M [year] in accordance with **EN ISO 13849-1: 2006**	**20**

Up to PL e of EN ISO 13849-1
PNOZ X2P

Times	
Switch-on delay	
with automatic reset typ.	**120 ms** No. 777307, 787307 **60 ms** No. 777303, 787303
with automatic reset max.	**150 ms** No. 777307, 787307 **90 ms** No. 777303, 787303
with automatic reset after power on typ.	**130 ms** No. 777307, 787307 **60 ms** No. 777303, 787303
with automatic reset after power on max.	**100 ms** No. 777303, 787303 **160 ms** No. 777307, 787307
with manual reset typ.	**38 ms**
with manual reset max.	**150 ms** No. 777307, 787307 **90 ms** No. 777303, 787303
on monitored reset with rising edge typ.	**38 ms**
on monitored reset with rising edge max.	**50 ms**
Delay-on de-energisation	
with E-STOP typ.	**12 ms** No. 777307, 787307 **17 ms** No. 777303, 787303
with E-STOP max.	**30 ms**
with power failure typ.	**40 ms** No. 777307, 787307 **70 ms** No. 777303, 787303
with power failure max.	**110 ms** No. 777303, 787303 **70 ms** No. 777307, 787307
with power failure typ. U_B AC : **240 V**	**320 ms** No. 777307, 787307
with power failure max. U_B AC : **240 V**	**500 ms** No. 777307, 787307
Recovery time at max. switching frequency 1/s	
after E-STOP	**50 ms**
after power failure	**150 ms** No. 777303, 787303 **550 ms** No. 777307, 787307
Waiting period with a monitored reset	
with rising edge	**180 ms**
Min. start pulse duration with a monitored reset	
with rising edge	**30 ms**
Simultaneity, channel 1 and 2	∞
Supply interruption before de-energisation	**20 ms**
Environmental data	
EMC	**EN 60947-5-1**, **EN 61000-6-2**, **EN 61000-6-3**
Vibration to **EN 60068-2-6**	
Frequency	**10 - 55 Hz**
Amplitude	**0.35 mm**
Climatic suitability	**EN 60068-2-78**
Airgap creepage in accordance with **EN 60947-1**	
Pollution degree	**2**
Overvoltage category	**III**
Rated insulation voltage	**250 V**
Rated impulse withstand voltage	**4.00 kV**
Ambient temperature	**-10 - 55 °C**
Storage temperature	**-40 - 85 °C**
Protection type	
Mounting (e.g. cabinet)	**IP54**
Housing	**IP40**
Terminals	**IP20**
Mechanical data	
Housing material	
Housing	**PPO UL 94 V0**
Front	**ABS UL 94 V0**

Pilz GmbH & Co. KG, Felix-Wankel-Straße 2, 73760 Ostfildern, Germany
Telephone: +49 711 3409-0, Telefax: +49 711 3409-133, E-Mail: pilz.gmbh@pilz.de

Up to PL e of EN ISO 13849-1
PNOZ X2P

Mechanical data	
Cross section of external conductors with screw terminals	
1 core flexible	**0.25 - 2.50 mm² , 24 - 12 AWG** No. 777303, 777307
2 core, same cross section, flexible:	
with crimp connectors, without insulating sleeve	**0.25 - 1.00 mm² , 24 - 16 AWG** No. 777303, 777307
without crimp connectors or with TWIN crimp connectors	**0.20 - 1.50 mm² , 24 - 16 AWG** No. 777303, 777307
Torque setting with screw terminals	**0.50 Nm** No. 777303, 777307
Cross section of external conductors with spring-loaded terminals: Flexible with/without crimp connectors	**0.20 - 1.50 mm² , 24 - 16 AWG** No. 787303, 787307
Spring-loaded terminals: Terminal points per connection	**2** No. 787303, 787307
Stripping length	**8 mm** No. 787303, 787307
Dimensions	
Height	**101.0 mm** No. 787303, 787307 **94.0 mm** No. 777303, 777307
Width	**22.5 mm**
Depth	**121.0 mm**
Weight	**200 g**

No. stands for order number.

It is essential to consider the relay's service life graphs. The relay outputs' safety-related characteristic data is only valid if the values in the service life graphs are met.

The PFH value depends on the switching frequency and the load on the relay output.
If the service life graphs are not accessible, the stated PFH value can be used irrespective of the switching frequency and the load, as the PFH value already considers the relay's B10d value as well as the failure rates of the other components.

All the units used within a safety function must be considered when calculating the safety characteristic data.

INFORMATION
A safety function's SIL/PL values are **not** identical to the SIL/PL values of the units that are used and may be different. We recommend that you use the PAScal software tool to calculate the safety function's SIL/PL values.

The standards current on **2009-11** apply.

Order reference

Type	Features		Terminals	Order no.
PNOZ X2P C	24 VAC	24 VDC	Spring-loaded terminals	787 303
PNOZ X2P	24 VAC	24 VDC	Screw terminals	777 303
PNOZ X2P C	48 - 240 VAC	48 - 240 VDC	Spring-loaded terminals	787 307
PNOZ X2P	48 - 240 VAC	48 - 240 VDC	Screw terminals	777 307

Up to PL d of EN ISO 13849-1
PNOZ X2.1VP



Safety relay for monitoring E-STOP pushbuttons and safety gates.

Approvals

	PNOZ X2.1VP
c UL us LISTED	◆
TÜV SÜD	◆
CCC	◆

Unit features

- Positive-guided relay outputs:
  - 2 safety contacts (N/O), delay-on de-energisation
- 1 semiconductor output
- Connection options for:
  - E-STOP pushbutton
  - Safety gate limit switch
  - Reset button
- LED indicator for:
  - Switch status channel 1/2
  - Supply voltage
  - Semiconductor output
- Semiconductor output signals:
  - Switch status channel 1/2
- Plug-in connection terminals (either spring-loaded terminal or screw terminal)
- See order reference for unit types

Unit description

The safety relay meets the requirements of EN 60947-5-1, EN 60204-1 and VDE 0113-1 and may be used in applications with

- E-STOP pushbuttons
- Safety gates

Safety features

The relay meets the following safety requirements:

- The circuit is redundant with built-in self-monitoring.
- The safety function remains effective in the case of a component failure.
- The correct opening and closing of the safety function relays is tested automatically in each on-off cycle.
- The unit has an electronic fuse.

Block diagram

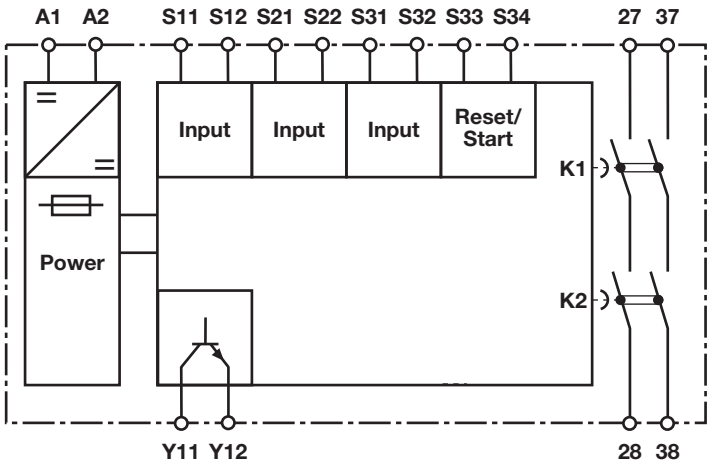

Pilz GmbH & Co. KG, Felix-Wankel-Straße 2, 73760 Ostfildern, Germany
Telephone: +49 711 3409-0, Telefax: +49 711 3409-133, E-Mail: pilz.gmbh@pilz.de
1001998-EN-02-2011-11

Up to PL d of EN ISO 13849-1
PNOZ X2.1VP

Function description

- Single-channel operation: no redundancy in the input circuit, earth faults in the reset and input circuit are detected.
- Dual-channel operation with detection of shorts across contacts: redundant input circuit, detects
  - earth faults in the reset and input circuit,
  - short circuits and shorts between contacts in the input circuit.
- Automatic start: Unit is active once the input circuit has been closed.
- Manual reset: Unit is active once the input circuit is closed and then the reset circuit is closed.
- Increase in the number of available instantaneous safety contacts by connecting contact expansion modules or external contactors.

Timing diagram

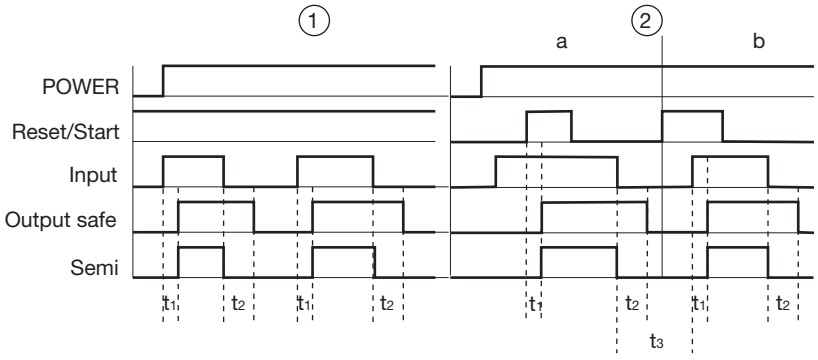

Key

- Power: Supply voltage
- Reset/Start: Reset circuit S33-S34
- Input: Input circuits S11-S12, S21-S22, S31-S32
- Output safe: Safety contacts, delayed 27-28, 37-38
- Semi: Semiconductor output
- ①: Automatic reset
- ②: Manual reset
- a: Input circuit closes before reset circuit
- b: Reset circuit closes before input circuit
- t_1: Switch-on delay
- t_2: Delay-on de-energisation
- t_3: Recovery time

Wiring

Please note:

- Information given in the “Technical details” must be followed.
- Outputs 27-28, 37-38 are delay-on de-energisation safety contacts.
- To prevent contact welding, a fuse should be connected before the output contacts (see technical details).
- Calculation of the max. cable runs I_{max} in the input circuit:

$$I_{max} = \frac{R_{lmax}}{R_l / km}$$

R_{lmax} = max. overall cable resistance (see technical details)
R_l / km = cable resistance/km

- Use copper wire that can withstand 60/75 °C.
- Sufficient fuse protection must be provided on all output contacts with capacitive and inductive loads.

Pilz GmbH & Co. KG, Felix-Wankel-Straße 2, 73760 Ostfildern, Germany
Telephone: +49 711 3409-0, Telefax: +49 711 3409-133, E-Mail: pilz.gmbh@pilz.de

Up to PL d of EN ISO 13849-1
PNOZ X2.1VP

Preparing for operation

- Supply voltage

Supply voltage	AC	DC
		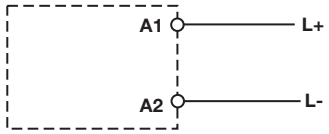

- Input circuit

Input circuit	Single-channel	Dual-channel
E-STOP **without** detection of shorts across contacts	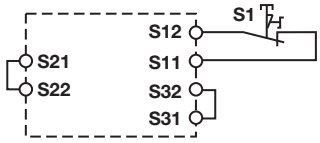	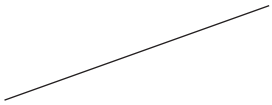
E-STOP **with** detection of shorts across contacts	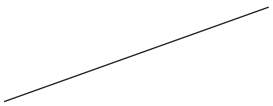	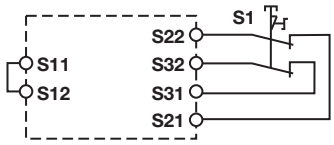
Safety gate **without** detection of shorts across contacts	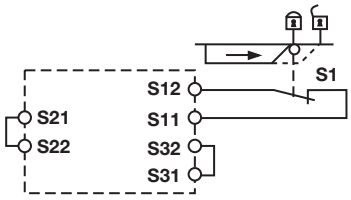	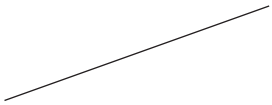
Safety gate **with** detection of shorts across contacts	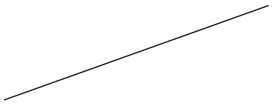	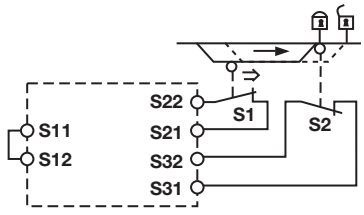

- Reset circuit

Reset circuit	E-STOP wiring (single-channel) Safety gate (single-channel)	E-STOP wiring (dual-channel) Safety gate (dual-channel)
Automatic reset		
Manual reset	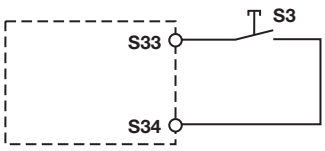	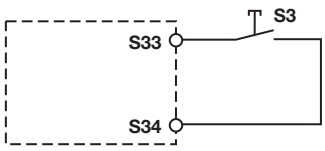

Pilz GmbH & Co. KG, Felix-Wankel-Straße 2, 73760 Ostfildern, Germany
Telephone: +49 711 3409-0, Telefax: +49 711 3409-133, E-Mail: pilz.gmbh@pilz.de

Up to PL d of EN ISO 13849-1
PNOZ X2.1VP

- Feedback circuit

Feedback circuit	Automatic reset	Manual reset
Contacts from external contactors	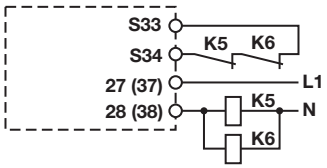	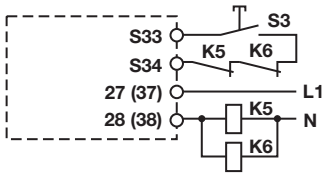

- Semiconductor output

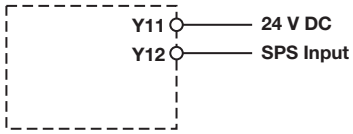

- Key

S1/S2	E-STOP/safety gate switch
S3	Reset button
	Switch operated
	Gate open
	Gate closed

Up to PL d of EN ISO 13849-1
PNOZ X2.1VP

Terminal configuration

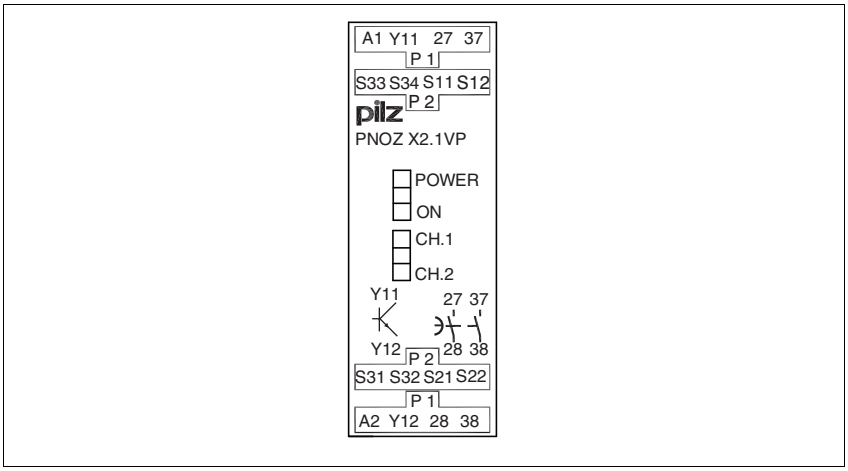

Installation

- The safety relay should be installed in a control cabinet with a protection type of at least IP54.
- Use the notch on the rear of the unit to attach it to a DIN rail.
- Ensure the unit is mounted securely on a vertical DIN rail (35 mm) by using a fixing element (e.g. retaining bracket or an end angle).

Dimensions

* with spring-loaded terminals

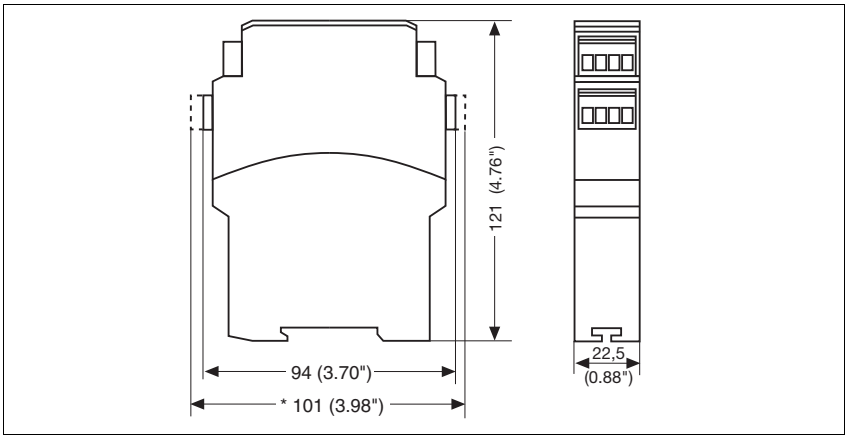

Pilz GmbH & Co. KG, Felix-Wankel-Straße 2, 73760 Ostfildern, Germany
Telephone: +49 711 3409-0, Telefax: +49 711 3409-133, E-Mail: pilz.gmbh@pilz.de

Up to PL d of EN ISO 13849-1
PNOZ X2.1VP

Notice

This data sheet is only intended for use during configuration. Please refer to the operating manual for installation and operation.

Service life graph

The service life graphs indicate the number of cycles from which failures due to wear must be expected. The wear is mainly caused by the electrical load; the mechanical load is negligible.

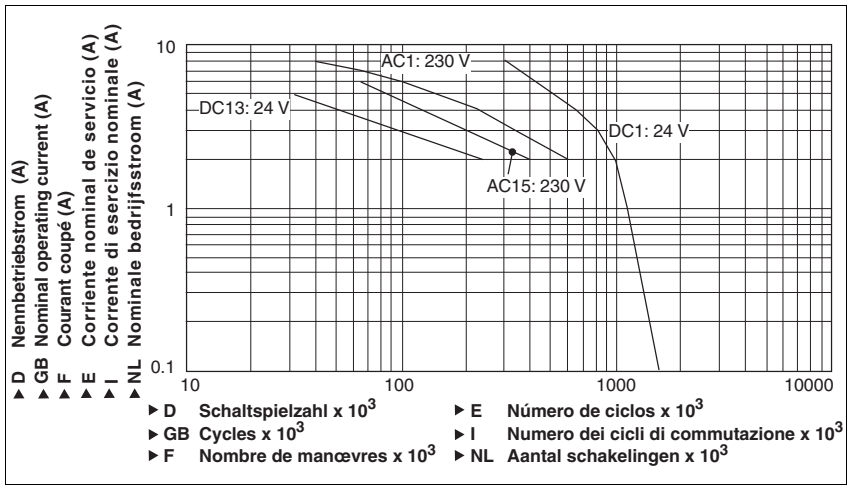

Example
- Inductive load: 2 A
- Utilisation category: AC15
- Contact service life: 400 000 cycles

Provided the application requires fewer than 400 000 cycles, the PFH value (see technical details) can be used in the calculation.

To increase the service life, sufficient spark suppression must be provided on all output contacts. With capacitive loads, any power surges that occur must be noted. With contactors, use freewheel diodes for spark suppression.

Technical details	
Electrical data	
Supply voltage	
Supply voltage U_B DC	**24 V**
Voltage tolerance	**-15 %/+10 %**
Power consumption at U_B DC	**1.5 W**
Residual ripple DC	**20 %**
Voltage and current at	
Input circuit DC: **24.0 V**	**25.0 mA**
Reset circuit DC: **24.0 V**	**50.0 mA**
Feedback loop DC: **24.0 V**	**50.0 mA**
Number of output contacts	
Safety contacts (N/O), delayed:	**2**

Pilz GmbH & Co. KG, Felix-Wankel-Straße 2, 73760 Ostfildern, Germany
Telephone: +49 711 3409-0, Telefax: +49 711 3409-133, E-Mail: pilz.gmbh@pilz.de

Up to PL d of EN ISO 13849-1
PNOZ X2.1VP

Electrical data	
Utilisation category in accordance with **EN 60947-4-1**	
Safety contacts, delayed: AC1 at **240 V**	I_{min}: **0.01 A** , I_{max}: **6.0 A** P_{max}: **1500 VA**
Safety contacts, delayed: DC1 at **24 V**	I_{min}: **0.01 A** , I_{max}: **6.0 A** P_{max}: **150 W**
Utilisation category in accordance with **EN 60947-5-1**	
Safety contacts, delayed: AC15 at **230 V**	I_{max}: **5.0 A**
Safety contacts, delayed: DC13 at **24 V** (6 cycles/min)	I_{max}: **4.0 A**
Conventional thermal current	**6.0 A**
Contact material	**AgSnO2 + 0.2 µm Au**
External contact fuse protection (I_K = 1 kA) to **EN 60947-5-1**	
Blow-out fuse, quick	
Safety contacts:	**6 A**
Blow-out fuse, slow	
Safety contacts:	**4 A**
Circuit breaker 24 VAC/DC, characteristic B/C	
Safety contacts:	**4 A**
Semiconductor outputs (short circuit proof)	**24.0 V** DC, **100 mA**
External supply voltage	**24.0 V** DC
Voltage tolerance	**-20 %/+20 %**
Max. overall cable resistance R_{lmax} input circuits, reset circuits	
single-channel at U_B DC	**40 Ohm**
dual-channel with detect. of shorts across contacts at U_B DC	**20 Ohm**
Safety-related characteristic data	
PL in accordance with **EN ISO 13849-1: 2006**	**PL d** (**Cat. 3**)
Category in accordance with **EN 954-1**	**Cat. 3**
SIL CL in accordance with **EN IEC 62061**	**SIL CL 3**
PFH in accordance with **EN IEC 62061**	**2.64E-09**
SIL in accordance with **IEC 61511**	**SIL 3**
PFD in accordance with **IEC 61511**	**1.26E-05**
T_M [year] in accordance with **EN ISO 13849-1: 2006**	**20**
Times	
Switch-on delay	
with automatic reset typ.	**100 ms**
with automatic reset max.	**210 ms**
with automatic reset after power on typ.	**100 ms**
with automatic reset after power on max.	**210 ms**
with manual reset typ.	**35 ms**
with manual reset max.	**210 ms**
Recovery time at max. switching frequency 1/s	
after E-STOP	**1550 ms**
after power failure	**1550 ms**
Delay time t_V: fixed	**0.75 s**
Time accuracy	**-30 %/+100 %** No. 777600 **-30% / +100%** No. 787600
Simultaneity, channel 1 and 2	∞
Supply interruption before de-energisation	**10 ms**
Environmental data	
EMC	**EN 60947-5-1**, **EN 61000-6-2**
Vibration to **EN 60068-2-6**	
Frequency	**10 - 55 Hz**
Amplitude	**0.35 mm**
Climatic suitability	**EN 60068-2-78**
Airgap creepage in accordance with **EN 60947-1**	
Pollution degree	**2**
Overvoltage category	**III**

Pilz GmbH & Co. KG, Felix-Wankel-Straße 2, 73760 Ostfildern, Germany
Telephone: +49 711 3409-0, Telefax: +49 711 3409-133, E-Mail: pilz.gmbh@pilz.de

Up to PL d of EN ISO 13849-1
PNOZ X2.1VP

Environmental data	
Rated insulation voltage	**250 V**
Rated impulse withstand voltage	**4.00 kV**
Ambient temperature	**-10 - 55 °C**
Storage temperature	**-40 - 85 °C**
Protection type	
Mounting (e.g. cabinet)	**IP54**
Housing	**IP40**
Terminals	**IP20**
Mechanical data	
Housing material	
Housing	**PPO UL 94 V0**
Front	**ABS UL 94 V0**
Cross section of external conductors with screw terminals	
1 core flexible	**0.25 - 2.50 mm² , 24 - 12 AWG** No. 777600
2 core, same cross section, flexible:	
with crimp connectors, without insulating sleeve	**0.25 - 1.00 mm² , 24 - 16 AWG** No. 777600
without crimp connectors or with TWIN crimp connectors	**0.20 - 1.50 mm² , 24 - 16 AWG** No. 777600
Torque setting with screw terminals	**0.50 Nm** No. 777600
Cross section of external conductors with spring-loaded terminals: Flexible with/without crimp connectors	**0.20 - 1.50 mm² , 24 - 16 AWG** No. 787600
Spring-loaded terminals: Terminal points per connection	**2** No. 787600
Stripping length	**8 mm** No. 787600
Dimensions	
Height	**101.0 mm** No. 787600 **94.0 mm** No. 777600
Width	**22.5 mm**
Depth	**121.0 mm**
Weight	**195 g** No. 787600 **200 g** No. 777600

No. stands for order number.

It is essential to consider the relay's service life graphs. The relay outputs' safety-related characteristic data is only valid if the values in the service life graphs are met.

The PFH value depends on the switching frequency and the load on the relay output.
If the service life graphs are not accessible, the stated PFH value can be used irrespective of the switching frequency and the load, as the PFH value already considers the relay's B10d value as well as the failure rates of the other components.

All the units used within a safety function must be considered when calculating the safety characteristic data.

INFORMATION
A safety function's SIL/PL values are **not** identical to the SIL/PL values of the units that are used and may be different. We recommend that you use the PAScal software tool to calculate the safety function's SIL/PL values.

The standards current on **2008-02** apply.

Up to PL d of EN ISO 13849-1
PNOZ X2.1VP

Order reference

Type	Features		Terminals	Order no.
PNOZ X2.1VP C		24 VDC	Spring-loaded terminals	787 600
PNOZ X2.1VP		24 VDC	Screw terminals	777 600

Pilz GmbH & Co. KG, Felix-Wankel-Straße 2, 73760 Ostfildern, Germany
Telephone: +49 711 3409-0, Telefax: +49 711 3409-133, E-Mail: pilz.gmbh@pilz.de

Up to PL e of EN ISO 13849-1
PNOZ X2.3P



Safety relay for monitoring E-STOP pushbuttons and safety gates.

Approvals

	PNOZ X2.3P
c UL us LISTED	◆
TÜV SÜD	◆
CCC	◆

Unit features

- Positive-guided relay outputs:
  - 3 safety contacts (N/O), instantaneous
- Connection options for:
  - E-STOP pushbutton
  - Safety gate limit switch
  - Reset button
- LED indicator for:
  - Switch status channel 1/2
  - Supply voltage
- Plug-in connection terminals (either spring-loaded terminal or screw terminal)
- See order reference for unit types

Unit description

The safety relay meets the requirements of EN 60947-5-1, EN 60204-1 and VDE 0113-1 and may be used in applications with
- E-STOP pushbuttons
- Safety gates

Safety features

The relay meets the following safety requirements:
- The circuit is redundant with built-in self-monitoring.
- The safety function remains effective in the case of a component failure.
- The correct opening and closing of the safety function relays is tested automatically in each on-off cycle.
- The unit has an electronic fuse.

Block diagram

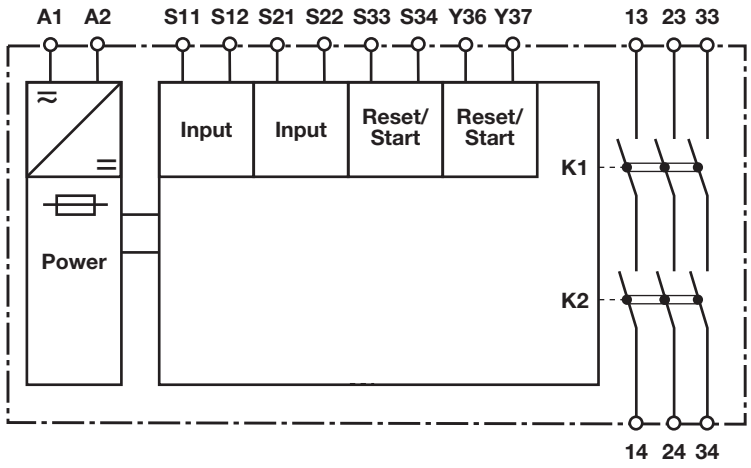

Up to PL e of EN ISO 13849-1
PNOZ X2.3P

Function description

- Single-channel operation: no redundancy in the input circuit, earth faults in the reset circuit are detected.
- Dual-channel operation with detection of shorts across contacts: redundant input circuit, detects
  – earth faults in the reset and input circuit,
  – short circuits in the input circuit and, with a monitored reset, in the reset circuit too,
  – shorts between contacts in the input circuit.
- Automatic start: Unit is active once the input circuit has been closed.
- Manual reset: Unit is active once the input circuit is closed and then the reset circuit is closed.
- Monitored reset: Unit is active once the input circuit is closed and once the reset circuit is closed after the waiting period has elapsed (see technical details).
- Increase in the number of available instantaneous safety contacts by connecting contact expansion modules or external contactors.

Timing diagram

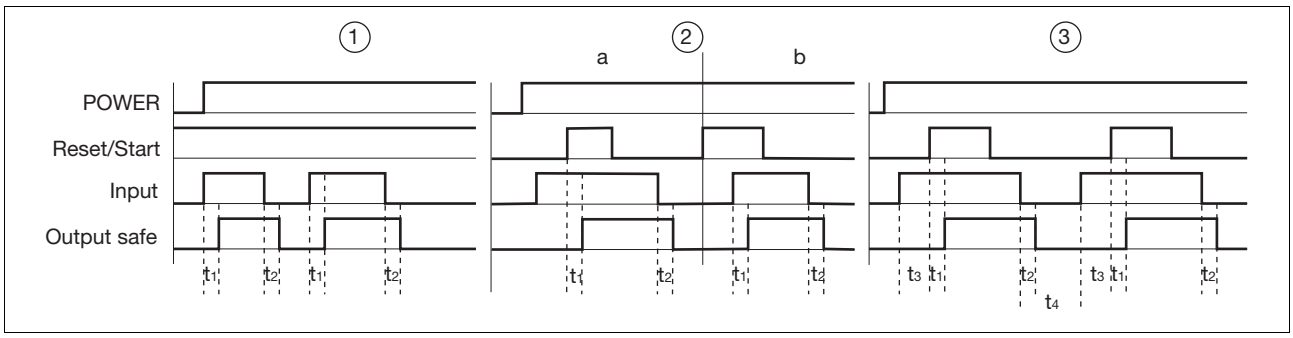

Key

- Power: Supply voltage
- Reset/Start: Reset circuit S33-S34
- Input: Input circuits S11-S12, S21-S22
- Output safe: Safety outputs 13-14, 23-24, 33-34
- ①: Automatic reset
- ②: Manual reset
- ③: Monitored reset
- a: Input circuit closes before reset circuit
- b: Reset circuit closes before input circuit
- t_1: Switch-on delay
- t_2: Delay-on de-energisation
- t_3: Waiting period
- t_4: Recovery time

Wiring

Please note:

- Information given in the “Technical details” must be followed.
- Outputs 13-14, 23-24, 33-34 are safety contacts.
- To prevent contact welding, a fuse should be connected before the output contacts (see technical details).
- Calculation of the max. cable runs l_{max} in the input circuit:

$$l_{max} = \frac{R_{lmax}}{R_l / km}$$

  R_{lmax} = max. overall cable resistance (see technical details)
  R_l /km = cable resistance/km
- Use copper wire that can withstand 60/75 °C.
- Sufficient fuse protection must be provided on all output contacts with capacitive and inductive loads.

Pilz GmbH & Co. KG, Felix-Wankel-Straße 2, 73760 Ostfildern, Germany
Telephone: +49 711 3409-0, Telefax: +49 711 3409-133, E-Mail: pilz.gmbh@pilz.de
1001999-EN-03-2011-11

Up to PL e of EN ISO 13849-1
PNOZ X2.3P

Preparing for operation

- Supply voltage

Supply voltage	AC	DC
	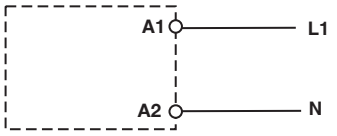	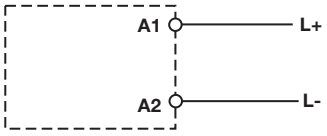

- Input circuit

Input circuit	Single-channel	Dual-channel
E-STOP **without** detection of shorts across contacts	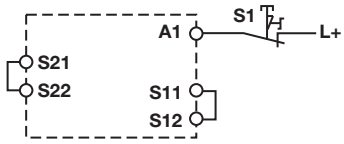	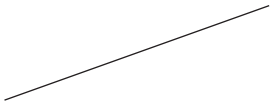
E-STOP **with** detection of shorts across contacts		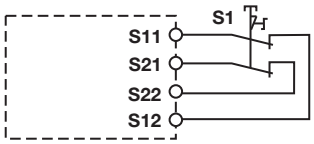
Safety gate **without** detection of shorts across contacts	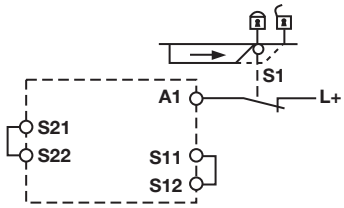	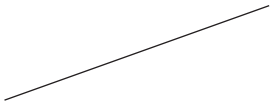
Safety gate **with** detection of shorts across contacts	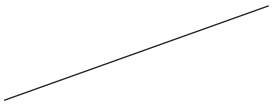	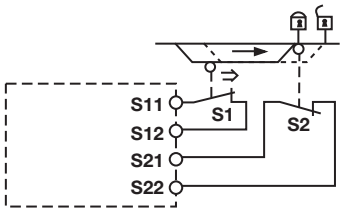

Up to PL e of EN ISO 13849-1
PNOZ X2.3P

▸ Reset circuit

Reset circuit	E-STOP wiring (single-channel) Safety gate (single-channel)	E-STOP wiring (dual-channel) Safety gate (dual-channel)
Automatic reset	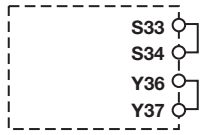	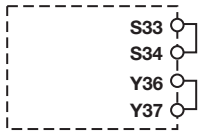
Manual reset	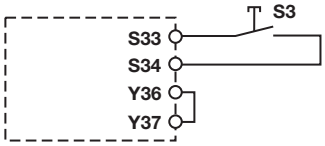	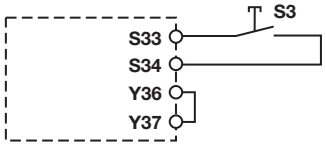
Monitored reset	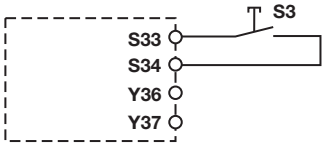	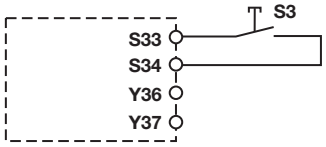

▸ Feedback circuit

Feedback circuit	Automatic reset	Monitored reset
Contacts from external contactors	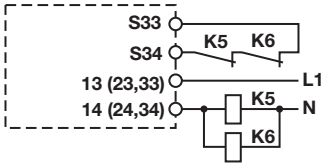	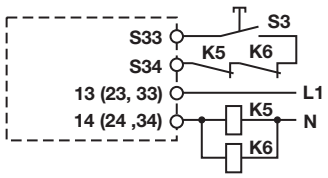

▸ Key

S1/S2	E-STOP/safety gate switch
S3	Reset button
	Switch operated
	Gate open
	Gate closed

Pilz GmbH & Co. KG, Felix-Wankel-Straße 2, 73760 Ostfildern, Germany
Telephone: +49 711 3409-0, Telefax: +49 711 3409-133, E-Mail: pilz.gmbh@pilz.de

Up to PL e of EN ISO 13849-1
PNOZ X2.3P

Terminal configuration

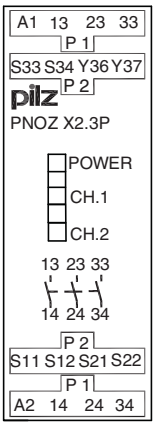

Installation

- The safety relay should be installed in a control cabinet with a protection type of at least IP54.
- Use the notch on the rear of the unit to attach it to a DIN rail.
- Ensure the unit is mounted securely on a vertical DIN rail (35 mm) by using a fixing element (e.g. retaining bracket or an end angle).

Dimensions

* with spring-loaded terminals

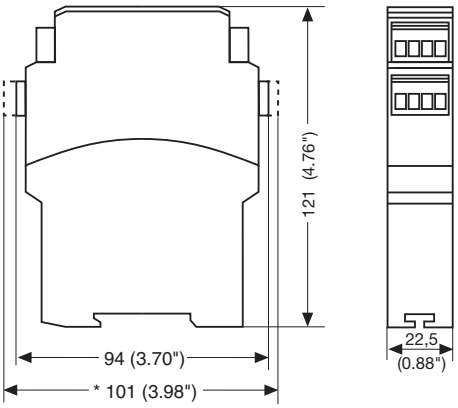

Up to PL e of EN ISO 13849-1
PNOZ X2.3P

Notice

This data sheet is only intended for use during configuration. Please refer to the operating manual for installation and operation.

Service life graph

The service life graphs indicate the number of cycles from which failures due to wear must be expected. The wear is mainly caused by the electrical load; the mechanical load is negligible.

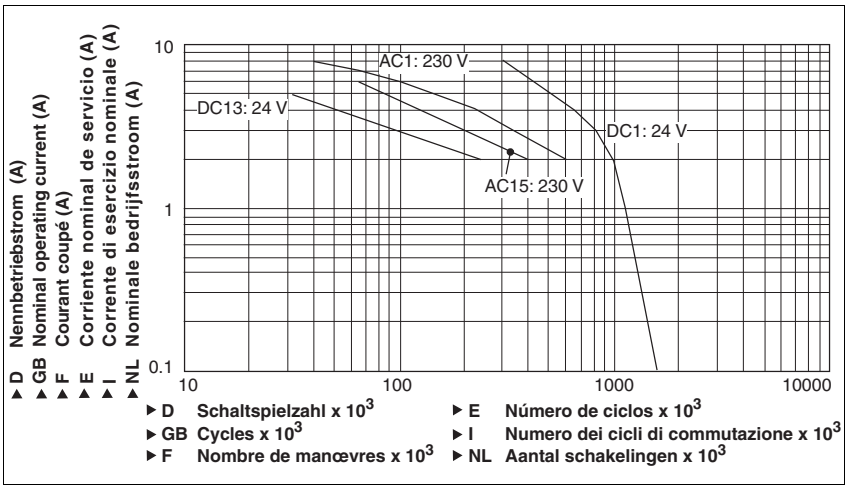

Example
- Inductive load: 2 A
- Utilisation category: AC15
- Contact service life: 400 000 cycles

Provided the application requires fewer than 400 000 cycles, the PFH value (see technical details) can be used in the calculation.

To increase the service life, sufficient spark suppression must be provided on all output contacts. With capacitive loads, any power surges that occur must be noted. With contactors, use freewheel diodes for spark suppression.

Technical details

Electrical data	
Supply voltage	
Supply voltage U_B AC/DC	**24 V**
Voltage tolerance	**-15 %/+10 %**
Power consumption at U_B AC	**4.0 VA**
Power consumption at U_B DC	**2.0 W**
Frequency range AC	**50 - 60 Hz**
Residual ripple DC	**160 %**
Voltage and current at	
Input circuit DC: **24.0 V**	**25.0 mA**
Reset circuit DC: **24.0 V**	**25.0 mA**
Feedback loop DC: **24.0 V**	**25.0 mA**
Number of output contacts	
Safety contacts (S) instantaneous:	**3**

Pilz GmbH & Co. KG, Felix-Wankel-Straße 2, 73760 Ostfildern, Germany
Telephone: +49 711 3409-0, Telefax: +49 711 3409-133, E-Mail: pilz.gmbh@pilz.de

Up to PL e of EN ISO 13849-1
PNOZ X2.3P

Electrical data	
Utilisation category in accordance with **EN 60947-4-1**	
Safety contacts: AC1 at **240 V**	I_{min}: **0.01 A** , I_{max}: **6.0 A** P_{max}: **1500 VA**
Safety contacts: DC1 at **24 V**	I_{min}: **0.01 A** , I_{max}: **6.0 A** P_{max}: **150 W**
Utilisation category in accordance with **EN 60947-5-1**	
Safety contacts: AC15 at **230 V**	I_{max}: **5.0 A**
Safety contacts: DC13 at **24 V** (6 cycles/min)	I_{max}: **4.0 A**
Contact material	**AgSnO2 + 0.2 µm Au**
External contact fuse protection (I_K = 1 kA) to **EN 60947-5-1**	
Blow-out fuse, quick	
Safety contacts:	**6 A**
Blow-out fuse, slow	
Safety contacts:	**4 A**
Circuit breaker 24 VAC/DC, characteristic B/C	
Safety contacts:	**4 A**
Max. overall cable resistance R_{lmax} input circuits, reset circuits	
single-channel at U_B DC	**30 Ohm**
single-channel at U_B AC	**30 Ohm**
dual-channel with detect. of shorts across contacts at U_B DC	**20 Ohm**
dual-channel with detect. of shorts across contacts at U_B AC	**40 Ohm**
Min. input resistance when switching on	**21 Ohm**
Safety-related characteristic data	
PL in accordance with **EN ISO 13849-1: 2006**	**PL e** (**Cat. 4**)
Category in accordance with **EN 954-1**	**Cat. 4**
SIL CL in accordance with **EN IEC 62061**	**SIL CL 3**
PFH in accordance with **EN IEC 62061**	**2.31E-09**
SIL in accordance with **IEC 61511**	**SIL 3**
PFD in accordance with **IEC 61511**	**2.03E-06**
T_M [year] in accordance with **EN ISO 13849-1: 2006**	**20**
Times	
Switch-on delay	
with automatic reset typ.	**50 ms**
with automatic reset max.	**90 ms**
with automatic reset after power on typ.	**60 ms**
with automatic reset after power on max.	**100 ms**
with manual reset typ.	**40 ms**
with manual reset max.	**90 ms**
on monitored reset with rising edge typ.	**40 ms**
on monitored reset with rising edge max.	**70 ms**
Delay-on de-energisation	
with E-STOP typ.	**12 ms**
with E-STOP max.	**30 ms**
with power failure typ.	**60 ms**
with power failure max.	**100 ms**
Recovery time at max. switching frequency 1/s	
after E-STOP	**50 ms**
after power failure	**150 ms**
Waiting period with a monitored reset	
with rising edge	**210 ms**
Min. start pulse duration with a monitored reset	
with rising edge	**40 ms**
Simultaneity, channel 1 and 2	∞
Supply interruption before de-energisation	**20 ms**

Up to PL e of EN ISO 13849-1
PNOZ X2.3P

Environmental data	
EMC	**EN 60947-5-1**, **EN 61000-6-2**
Vibration to **EN 60068-2-6**	
Frequency	**10 - 55 Hz**
Amplitude	**0.35 mm**
Climatic suitability	**EN 60068-2-78**
Airgap creepage in accordance with **EN 60947-1**	
Pollution degree	**2**
Overvoltage category	**III**
Rated insulation voltage	**250 V**
Rated impulse withstand voltage	**4.00 kV**
Ambient temperature	**-10 - 55 °C**
Storage temperature	**-40 - 85 °C**
Protection type	
Mounting (e.g. cabinet)	**IP54**
Housing	**IP40**
Terminals	**IP20**
Mechanical data	
Housing material	
Housing	**PPO UL 94 V0**
Front	**ABS UL 94 V0**
Cross section of external conductors with screw terminals	
1 core flexible	**0.25 - 2.50 mm² , 24 - 12 AWG** No. 777304
2 core, same cross section, flexible:	
with crimp connectors, without insulating sleeve	**0.25 - 1.00 mm² , 24 - 16 AWG** No. 777304
without crimp connectors or with TWIN crimp connectors	**0.20 - 1.50 mm² , 24 - 16 AWG** No. 777304
Torque setting with screw terminals	**0.50 Nm** No. 777304
Cross section of external conductors with spring-loaded terminals: Flexible with/without crimp connectors	**0.20 - 1.50 mm² , 24 - 16 AWG** No. 787304
Spring-loaded terminals: Terminal points per connection	**2** No. 787304
Stripping length	**8 mm** No. 787304
Dimensions	
Height	**101.0 mm** No. 787304 **94.0 mm** No. 777304
Width	**22.5 mm**
Depth	**121.0 mm**
Weight	**200 g** No. 787304 **205 g** No. 777304

No. stands for order number.

It is essential to consider the relay's service life graphs. The relay outputs' safety-related characteristic data is only valid if the values in the service life graphs are met.

The PFH value depends on the switching frequency and the load on the relay output.
If the service life graphs are not accessible, the stated PFH value can be used irrespective of the switching frequency and the load, as the PFH value already considers the relay's B10d value as well as the failure rates of the other components.

All the units used within a safety function must be considered when calculating the safety characteristic data.

INFORMATION
A safety function's SIL/PL values are **not** identical to the SIL/PL values of the units that are used and may be different. We recommend that you use the PAScal software tool to calculate the safety function's SIL/PL values.

The standards current on **2009-11** apply.

Pilz GmbH & Co. KG, Felix-Wankel-Straße 2, 73760 Ostfildern, Germany
Telephone: +49 711 3409-0, Telefax: +49 711 3409-133, E-Mail: pilz.gmbh@pilz.de

Up to PL e of EN ISO 13849-1
PNOZ X2.3P

Conventional thermal current while loading several contacts

Number of contacts	I_{th} per contact at U_B DC	I_{th} at U_B AC
1	**6.00 A**	**6.00 A**
2	**6.00 A**	**6.00 A**
3	**5.00 A**	**5.00 A**

Order reference

Type	Features	Terminals	Order no.
PNOZ X2.3P C	24 VAC/DC	Spring-loaded terminals	787 304
PNOZ X2.3P	24 VAC/DC	Screw terminals	777 304

Up to PL e of EN ISO 13849-1
PNOZ X2.7P



Safety relay for monitoring E-STOP pushbuttons, safety gates and light beam devices

Approvals

	PNOZ X2.7P
cULus LISTED	◆
TÜV SÜD	◆
CCC	◆

Unit features

- Positive-guided relay outputs:
  - 3 safety contacts (N/O), instantaneous
  - 1 auxiliary contact (N/C), instantaneous
- Connection options for:
  - E-STOP pushbutton
  - Safety gate limit switch
  - Reset button
  - Light barriers
- LED indicator for:
  - Switch status channel 1/2
  - Supply voltage
- Plug-in connection terminals (either spring-loaded terminal or screw terminal)
- See order reference for unit types

Unit description

The safety relay meets the requirements of EN 60947-5-1, EN 60204-1 and VDE 0113-1 and may be used in applications with

- E-STOP pushbuttons
- Safety gates
- Light beam devices

Safety features

The relay meets the following safety requirements:

- The circuit is redundant with built-in self-monitoring.
- The safety function remains effective in the case of a component failure.
- The correct opening and closing of the safety function relays is tested automatically in each on-off cycle.

Block diagram

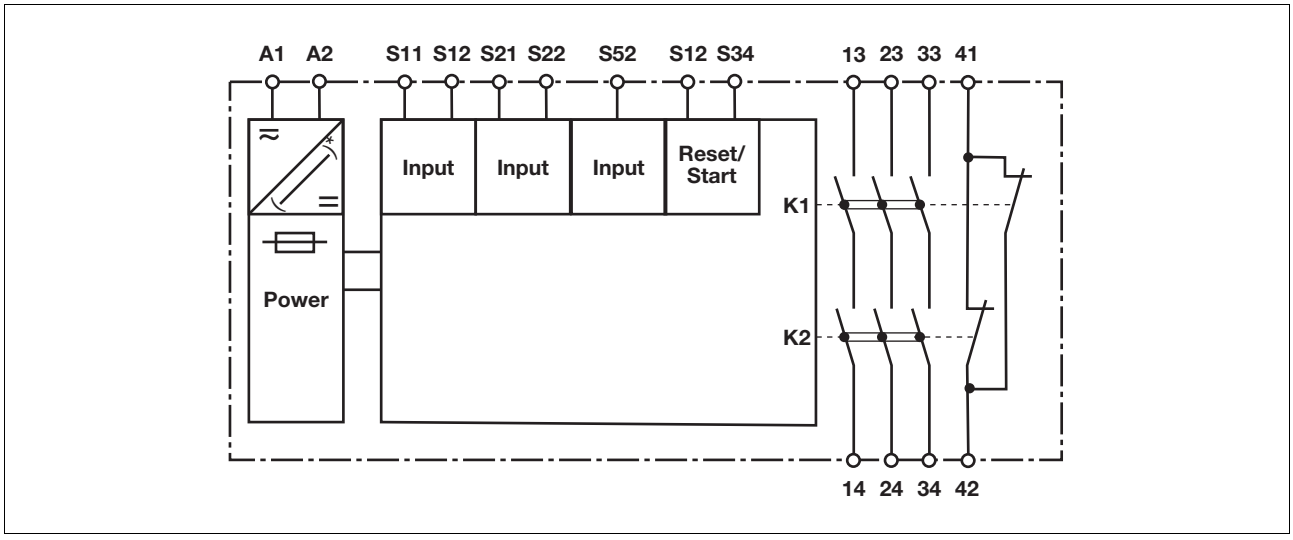

*only with U_B 24 – 240 VAC/DC

Pilz GmbH & Co. KG, Felix-Wankel-Straße 2, 73760 Ostfildern, Germany
Telephone: +49 711 3409-0, Telefax: +49 711 3409-133, E-Mail: pilz.gmbh@pilz.de

Up to PL e of EN ISO 13849-1
PNOZ X2.7P

Function description

- Single-channel operation: no redundancy in the input circuit, earth faults in the reset circuit are detected.
- Dual-channel operation without detection of shorts across contacts: redundant input circuit, detects
  – earth faults in the reset and input circuit,
  – short circuits in the input circuit and, with a monitored reset, in the reset circuit too.
- Dual-channel operation with detection of shorts across contacts: redundant input circuit, detects
  – earth faults in the reset and input circuit,
  – short circuits in the input circuit and, with a monitored reset, in the reset circuit too,
  – shorts between contacts in the input circuit.
- Monitored reset: Unit is active once the input circuit is closed and once the reset circuit is closed after the waiting period has elapsed (see technical details).
- Increase in the number of available instantaneous safety contacts by connecting contact expansion modules or external contactors.

Timing diagram

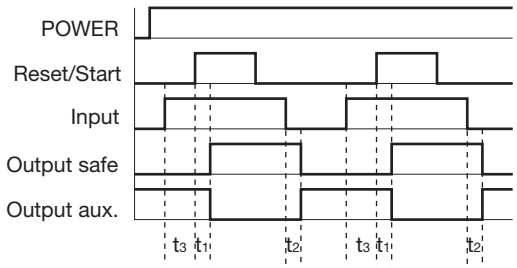

Key

- Power: Supply voltage
- Reset/start: Reset circuit S12-S34
- Input: Input circuits S11-S12, S21-S22, S52
- Output safe: Safety contacts 13-14, 23-24, 33-34
- Output aux: Auxiliary contacts 41-42
- t_1: Switch-on delay
- t_2: Delay-on de-energisation
- t_3: Waiting period

Wiring

Please note:

- Information given in the “Technical details” must be followed.
- Outputs 13-14, 23-24, 33-34 are safety contacts, output 41-42 is an auxiliary contact (e.g. for display).
- To prevent contact welding, a fuse should be connected before the output contacts (see technical details).
- Calculation of the max. cable runs I_{max} in the input circuit:

$$I_{max} = \frac{R_{lmax}}{R_l / km}$$

  R_{lmax} = max. overall cable resistance (see technical details)
  R_l /km = cable resistance/km
- Use copper wire that can withstand 60/75 °C.
- Sufficient fuse protection must be provided on all output contacts with capacitive and inductive loads.

Pilz GmbH & Co. KG, Felix-Wankel-Straße 2, 73760 Ostfildern, Germany
Telephone: +49 711 3409-0, Telefax: +49 711 3409-133, E-Mail: pilz.gmbh@pilz.de

Up to PL e of EN ISO 13849-1
PNOZ X2.7P

Preparing for operation

- Supply voltage

Supply voltage	24 – 240 VAC/DC	24 VAC/DC
	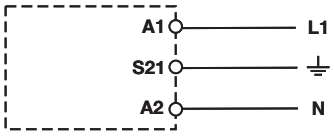	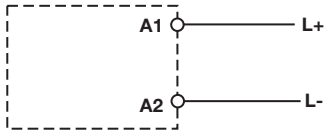

- Input circuit

Input circuit	Single-channel	Dual-channel
E-STOP **without** detection of shorts across contacts	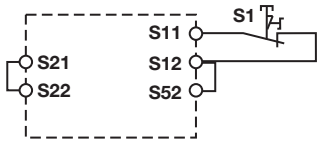	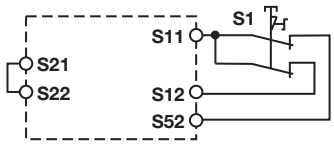
E-STOP **with** detection of shorts across contacts	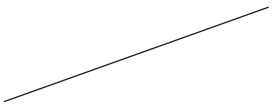	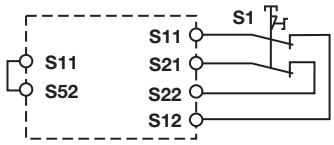
Safety gate **without** detection of shorts across contacts	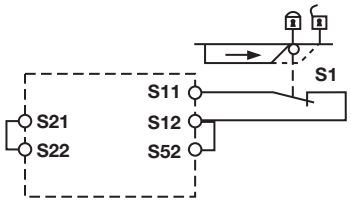	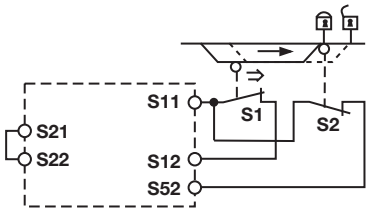
Safety gate **with** detection of shorts across contacts	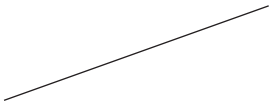	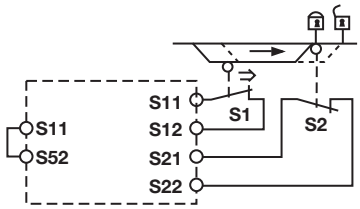
Light beam device **with** detection of shorts across contacts via ESPE (not on units with a universal power supply)	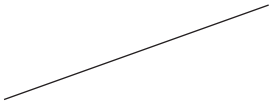	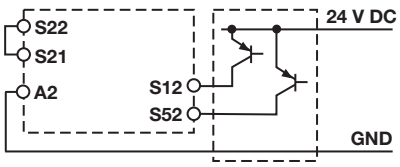

Pilz GmbH & Co. KG, Felix-Wankel-Straße 2, 73760 Ostfildern, Germany
Telephone: +49 711 3409-0, Telefax: +49 711 3409-133, E-Mail: pilz.gmbh@pilz.de

Up to PL e of EN ISO 13849-1
PNOZ X2.7P

▸ Reset circuit

Reset circuit	E-STOP wiring (single-channel) Safety gate (single-channel)	E-STOP wiring (dual-channel) Safety gate (dual-channel)
Monitored reset	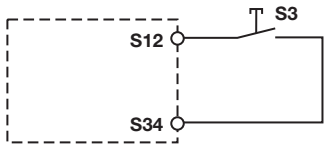	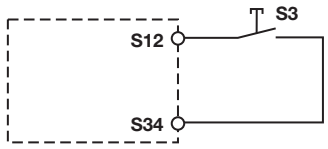

▸ Feedback circuit

Feedback circuit	Automatic reset	Monitored reset
Contacts from external contactors	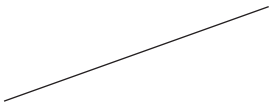	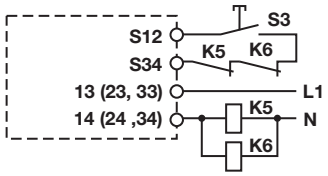

▸ Key

S1/S2	E-STOP/safety gate switch
S3	Reset button
	Switch operated
	Gate open
	Gate closed

Up to PL e of EN ISO 13849-1
PNOZ X2.7P

Terminal configuration

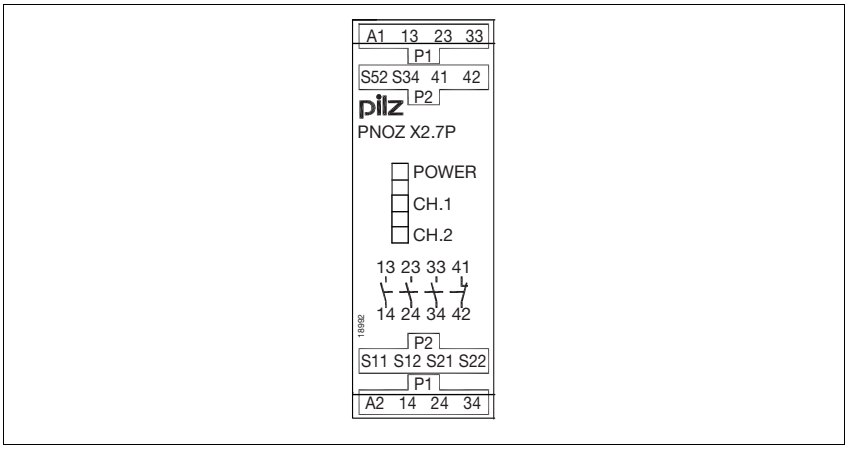

Installation

- The safety relay should be installed in a control cabinet with a protection type of at least IP54.
- Use the notch on the rear of the unit to attach it to a DIN rail.
- Ensure the unit is mounted securely on a vertical DIN rail (35 mm) by using a fixing element (e.g. retaining bracket or an end angle).

Dimensions

* with spring-loaded terminals

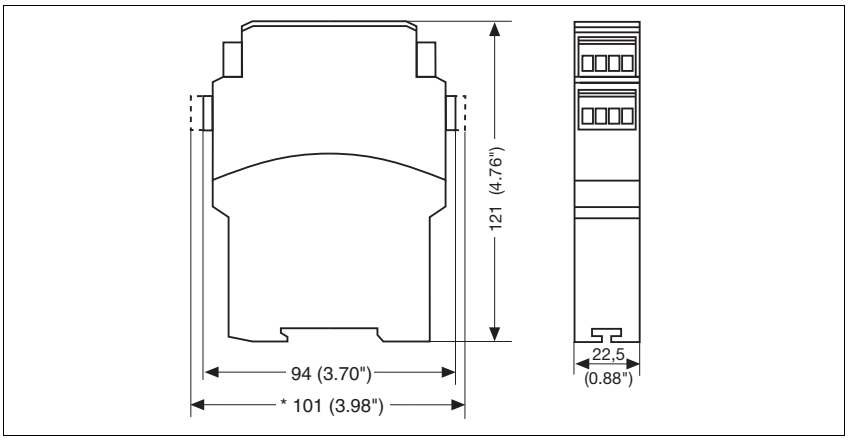

Pilz GmbH & Co. KG, Felix-Wankel-Straße 2, 73760 Ostfildern, Germany
Telephone: +49 711 3409-0, Telefax: +49 711 3409-133, E-Mail: pilz.gmbh@pilz.de

Up to PL e of EN ISO 13849-1
PNOZ X2.7P

Notice

This data sheet is only intended for use during configuration. Please refer to the operating manual for installation and operation.

Service life graph

The service life graphs indicate the number of cycles from which failures due to wear must be expected. The wear is mainly caused by the electrical load; the mechanical load is negligible.

U_B 24 V AC/DC

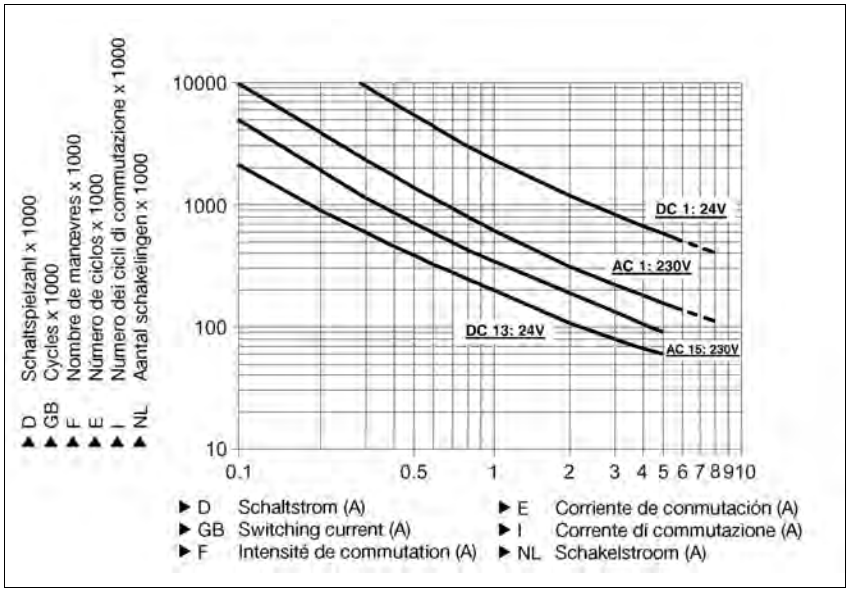

Example
- Inductive load: 0,2 A
- Utilisation category: AC15
- Contact service life: 2,000,000 cycles

Provided the application requires fewer than 2,000,000 cycles, the PFH value (see technical details) can be used in the calculation.

To increase the service life, sufficient spark suppression must be provided on all output contacts. With capacitive loads, any power surges that occur must be noted. With contactors, use freewheel diodes for spark suppression.

Up to PL e of EN ISO 13849-1
PNOZ X2.7P

U_B 24 - 240 V AC/DC

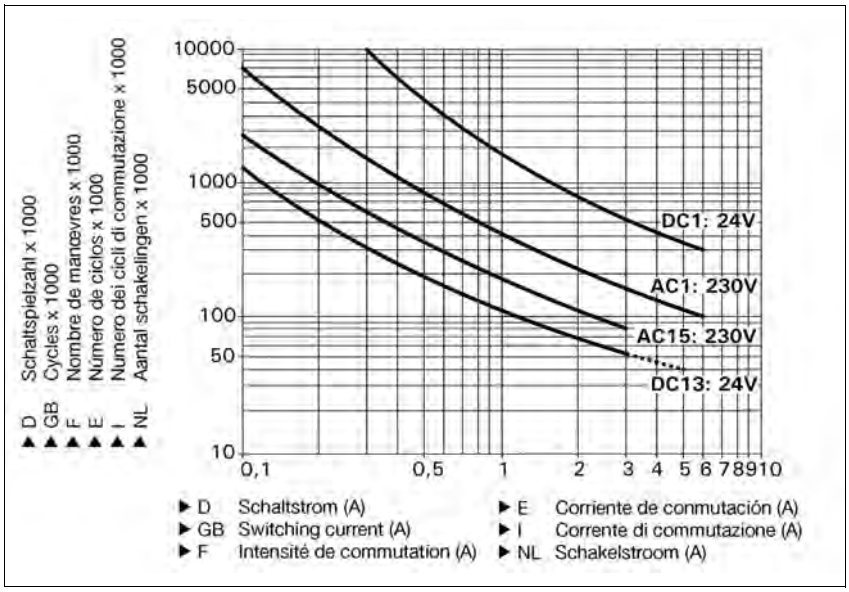

Example
- Inductive load: 0,2 A
- Utilisation category: AC15
- Contact service life: 1,000,000 cycles

Provided the application requires fewer than 1,000,000 cycles, the PFH value (see technical details) can be used in the calculation.

To increase the service life, sufficient spark suppression must be provided on all output contacts. With capacitive loads, any power surges that occur must be noted. With contactors, use freewheel diodes for spark suppression.

Technical details

Electrical data	
Supply voltage	
Supply voltage U_B AC/DC	**24 - 240 V**, **24 V**
Voltage tolerance	**-15 %/+10 %**
Power consumption at U_B AC	**4.5 VA** No. 777306, 787306 **5.5 VA** No. 777305, 787305
Power consumption at U_B DC	**2.0 W** No. 777306, 787306 **2.5 W** No. 777305, 787305
Frequency range AC	**50 - 60 Hz**
Residual ripple DC	**160 %**
Voltage and current at	
Input circuit DC: **24.0 V**	**25.0 mA** No. 777306, 787306 **30.0 mA** No. 777305, 787305
Reset circuit DC: **24.0 V**	**40.0 mA** No. 777305, 787305 **50.0 mA** No. 777306, 787306
Feedback loop DC: **24.0 V**	**40.0 mA** No. 777305, 787305 **50.0 mA** No. 777306, 787306
Number of output contacts	
Safety contacts (S) instantaneous:	**3**
Auxiliary contacts (N/C):	**1**

Pilz GmbH & Co. KG, Felix-Wankel-Straße 2, 73760 Ostfildern, Germany
Telephone: +49 711 3409-0, Telefax: +49 711 3409-133, E-Mail: pilz.gmbh@pilz.de

Up to PL e of EN ISO 13849-1
PNOZ X2.7P

Electrical data	
Utilisation category in accordance with **EN 60947-4-1**	
Safety contacts: AC1 at **240 V**	I_{min}: **0.01 A** , I_{max}: **6.0 A** P_{max}: **1500 VA**
Safety contacts: DC1 at **24 V**	I_{min}: **0.01 A** , I_{max}: **6.0 A** P_{max}: **150 W**
Auxiliary contacts: AC1 at **240 V**	I_{min}: **0.01 A** , I_{max}: **6.0 A** P_{max}: **1500 VA**
Auxiliary contacts: DC1 at **24 V**	I_{min}: **0.01 A** , I_{max}: **6.0 A** P_{max}: **150 W**
Utilisation category in accordance with **EN 60947-5-1**	
Safety contacts: AC15 at **230 V**	I_{max}: **3.0 A** No. 777306, 787306 **5.0 A** No. 777305, 787305
Safety contacts: DC13 at **24 V** (6 cycles/min)	I_{max}: **4.0 A** No. 777306, 787306 **5.0 A** No. 777305, 787305
Auxiliary contacts: AC15 at **230 V**	I_{max}: **3.0 A** No. 777306, 787306 **5.0 A** No. 777305, 787305
Auxiliary contacts: DC13 at **24 V** (6 cycles/min)	I_{max}: **4.0 A** No. 777306, 787306 **5.0 A** No. 777305, 787305
Contact material	**AgCuNi + 0.2 µm Au**
External contact fuse protection (I_K = 1 kA) to **EN 60947-5-1**	
Blow-out fuse, quick	
Safety contacts:	**10 A** No. 777305, 787305 **6 A** No. 777306, 787306
Auxiliary contacts:	**10 A** No. 777305, 787305 **6 A** No. 777306, 787306
Blow-out fuse, slow	
Safety contacts:	**4 A** No. 777306, 787306 **6 A** No. 777305, 787305
Auxiliary contacts:	**4 A** No. 777306, 787306 **6 A** No. 777305, 787305
Circuit breaker 24 VAC/DC, characteristic B/C	
Safety contacts:	**4 A** No. 777306, 787306 **6 A** No. 777305, 787305
Auxiliary contacts:	**4 A** No. 777306, 787306 **6 A** No. 777305, 787305
Max. overall cable resistance R_{lmax} input circuits, reset circuits	
single-channel at U_B DC	**30 Ohm** No. 777305, 787305 **45 Ohm** No. 777306, 787306
single-channel at U_B AC	**100 Ohm** No. 777305, 787305 **45 Ohm** No. 777306, 787306
dual-channel without detect. of shorts across contacts at U_B DC	**50 Ohm** No. 777305, 787305 **80 Ohm** No. 777306, 787306
dual-channel without detect. of shorts across contacts at U_B AC	**100 Ohm** No. 777305, 787305 **80 Ohm** No. 777306, 787306
dual-channel with detect. of shorts across contacts at U_B DC	**15 Ohm**
dual-channel with detect. of shorts across contacts at U_B AC	**15 Ohm**
Min. input resistance when switching on	**141 Ohm** No. 777306, 787306 **71 Ohm** No. 777305, 787305
Safety-related characteristic data	
PL in accordance with **EN ISO 13849-1: 2006**	**PL e** (**Cat. 4**)
Category in accordance with **EN 954-1**	**Cat. 4**
SIL CL in accordance with **EN IEC 62061**	**SIL CL 3**
PFH in accordance with **EN IEC 62061**	**2.31E-09**
SIL in accordance with **IEC 61511**	**SIL 3**
PFD in accordance with **IEC 61511**	**2.03E-06**
T_M [year] in accordance with **EN ISO 13849-1: 2006**	**20**

Up to PL e of EN ISO 13849-1
PNOZ X2.7P

Times	
Switch-on delay	
on monitored reset with rising edge typ.	**30 ms**
on monitored reset with rising edge max.	**40 ms** No. 777306, 787306 **50 ms** No. 777305, 787305
Delay-on de-energisation	
with E-STOP typ.	**10 ms** No. 777306, 787306 **15 ms** No. 777305, 787305
with E-STOP max.	**20 ms** No. 777306, 787306 **30 ms** No. 777305, 787305
with power failure typ.	**60 ms** No. 777305, 787305
with power failure max.	**100 ms** No. 777305, 787305
with power failure typ. U_B AC/DC: **24 V** No. 777306, 787306	**180 ms** No. 777306, 787306
with power failure max. U_B AC/DC: **24 V** No. 777306, 787306	**230 ms** No. 777306, 787306
with power failure typ. U_B AC : **240 V**	**1,100 ms** No. 777306, 787306
with power failure max. U_B AC : **240 V**	**1500 ms** No. 777306, 787306
Recovery time at max. switching frequency 1/s	
after E-STOP	**50 ms**
after power failure	**200 ms** No. 777305, 787305 **250 ms** No. 777306, 787306
after power failure on universal power supply	**1500 ms** No. 777306, 787306
Waiting period with a monitored reset	
with rising edge	**250 ms** No. 777305, 787305 **300 ms** No. 777306, 787306
Min. start pulse duration with a monitored reset	
with rising edge	**30 ms**
Simultaneity, channel 1 and 2	∞
Supply interruption before de-energisation	**20 ms**
Environmental data	
EMC	**EN 60947-5-1**, **EN 61000-6-2**, **EN 61000-6-4**
Vibration to **EN 60068-2-6**	
Frequency	**10 - 55 Hz**
Amplitude	**0.35 mm**
Climatic suitability	**EN 60068-2-78**
Airgap creepage in accordance with **EN 60947-1**	
Pollution degree	**2**
Overvoltage category	**III / II**
Rated insulation voltage	**250 V**
Rated impulse withstand voltage	**4.00 kV**
Ambient temperature	**-10 - 55 °C** No. 777306, 787306 **-35 - 55 °C** No. 777305, 787305
Storage temperature	**-40 - 85 °C**
Protection type	
Mounting (e.g. cabinet)	**IP54**
Housing	**IP40**
Terminals	**IP20**
Mechanical data	
Housing material	
Housing	**PPO UL 94 V0**
Front	**ABS UL 94 V0**
Cross section of external conductors with screw terminals	
1 core flexible	**0.25 - 2.50 mm² , 24 - 12 AWG** No. 777305, 777306
2 core, same cross section, flexible:	
with crimp connectors, without insulating sleeve	**0.25 - 1.00 mm² , 24 - 16 AWG** No. 777305, 777306
without crimp connectors or with TWIN crimp connectors	**0.20 - 1.50 mm² , 24 - 16 AWG** No. 777305, 777306
Torque setting with screw terminals	**0.50 Nm** No. 777305, 777306
Cross section of external conductors with spring-loaded terminals: Flexible with/without crimp connectors	**0.20 - 1.50 mm² , 24 - 16 AWG** No. 787305, 787306

Pilz GmbH & Co. KG, Felix-Wankel-Straße 2, 73760 Ostfildern, Germany
Telephone: +49 711 3409-0, Telefax: +49 711 3409-133, E-Mail: pilz.gmbh@pilz.de

Up to PL e of EN ISO 13849-1
PNOZ X2.7P

Mechanical data	
Spring-loaded terminals: Terminal points per connection	**2** No. 787305, 787306
Stripping length	**8 mm** No. 787305, 787306
Dimensions	
Height	**101.0 mm** No. 787305, 787306 **94.0 mm** No. 777305, 777306
Width	**22.5 mm**
Depth	**121.0 mm**
Weight	**190 g** No. 777305, 787305 **205 g** No. 787306 **210 g** No. 777306

No. stands for order number.

It is essential to consider the relay's service life graphs. The relay outputs' safety-related characteristic data is only valid if the values in the service life graphs are met.

The PFH value depends on the switching frequency and the load on the relay output.
If the service life graphs are not accessible, the stated PFH value can be used irrespective of the switching frequency and the load, as the PFH value already considers the relay's B10d value as well as the failure rates of the other components.

All the units used within a safety function must be considered when calculating the safety characteristic data.

INFORMATION
A safety function's SIL/PL values are **not** identical to the SIL/PL values of the units that are used and may be different. We recommend that you use the PAScal software tool to calculate the safety function's SIL/PL values.

The standards current on **2009-12** apply.

Conventional thermal current while loading several contacts

Number of contacts	I_{th} per contact at U_B DC	I_{th} at U_B AC
1	**6.00 A**	**6.00 A**
2	**6.00 A**	**4.00 A** No. 777305, 787305 **6.00 A** No. 777306, 787306
3	**4.50 A** No. 777306, 787306 **5.00 A** No. 777305, 787305	**3.50 A** No. 777305, 787305 **4.50 A** No. 777306, 787306

Order reference

Type	Features		Terminals	Order no.
PNOZ X2.7P C	24 VAC	24 VDC	Spring-loaded terminals	787 305
PNOZ X2.7P	24 VAC	24 VDC	Screw terminals	777 305
PNOZ X2.7P C	24 - 240 VAC	24 - 240 VDC	Spring-loaded terminals	787 306
PNOZ X2.7P	24 - 240 VAC	24 - 240 VDC	Screw terminals	777 306

Up to PL e of EN ISO 13849-1
PNOZ X2.8P



Safety relay for monitoring E-STOP pushbuttons, safety gates and light beam devices

Approvals

	PNOZ X2.8P
cULus LISTED	◆
TÜV SÜD	◆
CCC	◆

Unit features

- Positive-guided relay outputs:
  - 3 safety contacts (N/O), instantaneous
  - 1 auxiliary contact (N/C), instantaneous
- Connection options for:
  - E-STOP pushbutton
  - Safety gate limit switch
  - Reset button
  - Light barriers
- LED indicator for:
  - Switch status channel 1/2
  - Supply voltage
- Plug-in connection terminals (either spring-loaded terminal or screw terminal)
- See order reference for unit types

Unit description

The safety relay meets the requirements of EN 60947-5-1, EN 60204-1 and VDE 0113-1 and may be used in applications with

- E-STOP pushbuttons
- Safety gates
- Light beam devices

Safety features

The relay meets the following safety requirements:

- The circuit is redundant with built-in self-monitoring.
- The safety function remains effective in the case of a component failure.
- The correct opening and closing of the safety function relays is tested automatically in each on-off cycle.

Block diagram

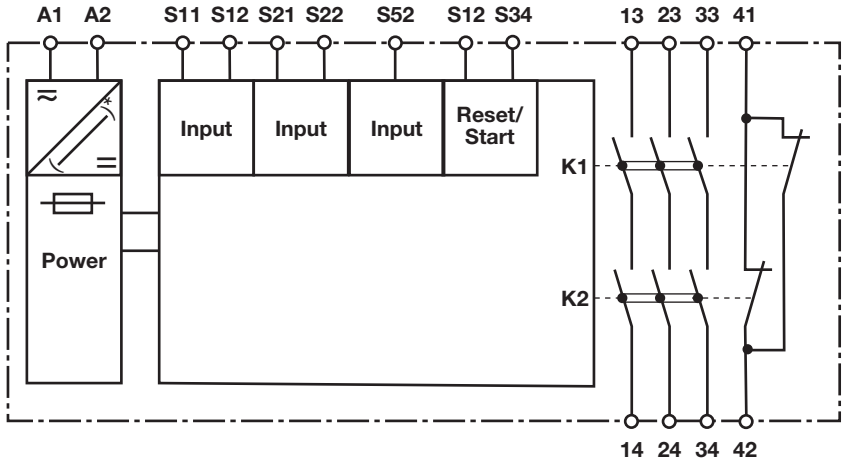

*only applicable for U_B 24 - 240 VAC/DC

Pilz GmbH & Co. KG, Felix-Wankel-Straße 2, 73760 Ostfildern, Germany
Telephone: +49 711 3409-0, Telefax: +49 711 3409-133, E-Mail: pilz.gmbh@pilz.de

Up to PL e of EN ISO 13849-1
PNOZ X2.8P

Function description

- Single-channel operation: no redundancy in the input circuit, earth faults in the reset and input circuit are detected.
- Dual-channel operation without detection of shorts across contacts: redundant input circuit, detects
  - earth faults in the reset and input circuit,
  - short circuits in the input circuit and, with a monitored reset, in the reset circuit too.
- Dual-channel operation with detection of shorts across contacts: redundant input circuit, detects
  - earth faults in the reset and input circuit,
  - short circuits and shorts between contacts in the input circuit.
- Automatic start: Unit is active once the input circuit has been closed.
- Manual reset: Unit is active once the input circuit is closed and then the reset circuit is closed.
- Increase in the number of available instantaneous safety contacts by connecting contact expansion modules or external contactors.

Timing diagram

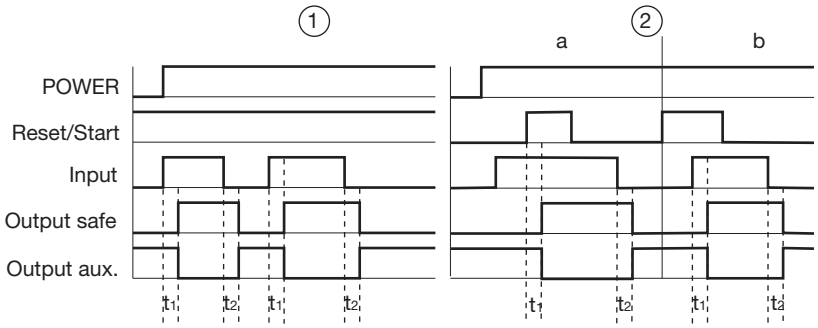

Key

- Power: Supply voltage
- Reset/start: Reset circuit S12-S34
- Input: Input circuits S11-S12, S21-S22, S52
- Output safe: Safety contacts 13-14, 23-24, 33-34,
- Output aux: Auxiliary contacts 41-42
- ①: Automatic reset
- ②: Manual reset
- a: Input circuit closes before reset circuit
- b: Reset circuit closes before input circuit
- t_1: Switch-on delay
- t_2: Delay-on de-energisation

Wiring

Please note:

- Information given in the “Technical details” must be followed.
- Outputs 13-14, 23-24, 33-34, are safety contacts, output 41-42 is an auxiliary contact (e.g. for display).
- To prevent contact welding, a fuse should be connected before the output contacts (see technical details).
- Calculation of the max. cable runs l_{max} in the input circuit:

$$l_{max} = \frac{R_{lmax}}{R_l / km}$$

  R_{lmax} = max. overall cable resistance (see technical details)
  R_l /km = cable resistance/km
- Use copper wire that can withstand 60/75 °C.
- Sufficient fuse protection must be provided on all output contacts with capacitive and inductive loads.

Pilz GmbH & Co. KG, Felix-Wankel-Straße 2, 73760 Ostfildern, Germany
Telephone: +49 711 3409-0, Telefax: +49 711 3409-133, E-Mail: pilz.gmbh@pilz.de

Up to PL e of EN ISO 13849-1
PNOZ X2.8P

Preparing for operation

- Supply voltage

Supply voltage	24 – 240 VAC/DC	24 VAC/DC
	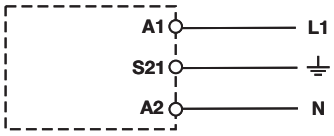	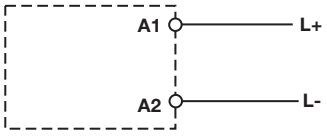

- Input circuit

Input circuit	Single-channel	Dual-channel
E-STOP **without** detection of shorts across contacts	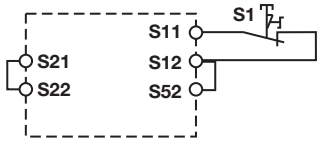	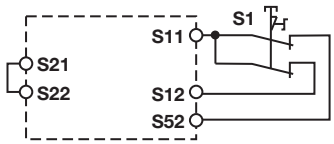
E-STOP **with** detection of shorts across contacts	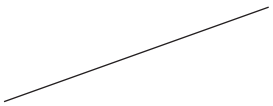	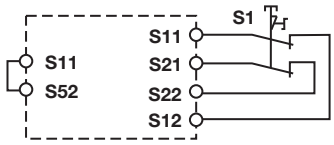
Safety gate **without** detection of shorts across contacts	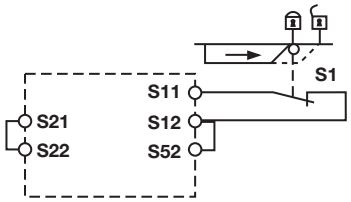	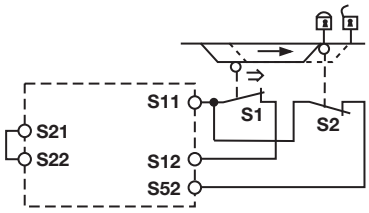
Safety gate **with** detection of shorts across contacts	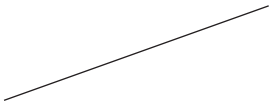	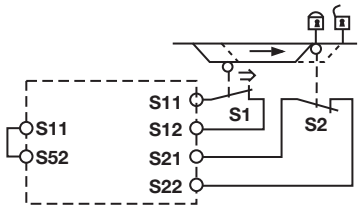
Light beam device **with** detection of shorts across contacts (not on units with a universal power supply)	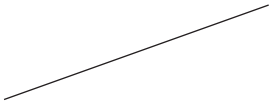	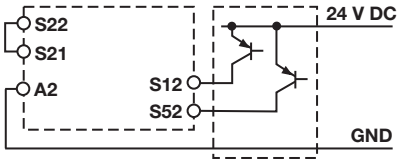

Pilz GmbH & Co. KG, Felix-Wankel-Straße 2, 73760 Ostfildern, Germany
Telephone: +49 711 3409-0, Telefax: +49 711 3409-133, E-Mail: pilz.gmbh@pilz.de

Up to PL e of EN ISO 13849-1
PNOZ X2.8P

▸ Reset circuit

Reset circuit	E-STOP wiring (single-channel) Safety gate (single-channel)	E-STOP wiring (dual-channel) Safety gate (dual-channel)
Automatic reset		
Manual reset	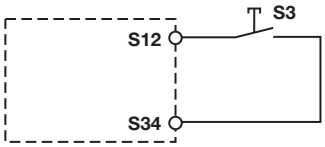	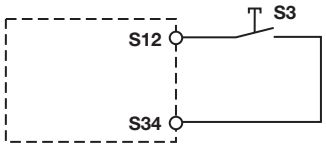

▸ Feedback circuit

Feedback circuit	Automatic reset	Manual reset
Contacts from external contactors	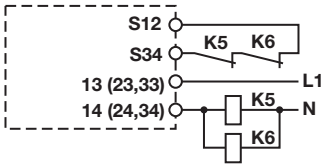	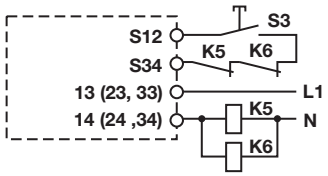

▸ Key

S1/S2	E-STOP/safety gate switch
S3	Reset button
	Switch operated
	Gate open
	Gate closed

Up to PL e of EN ISO 13849-1
PNOZ X2.8P

Terminal configuration

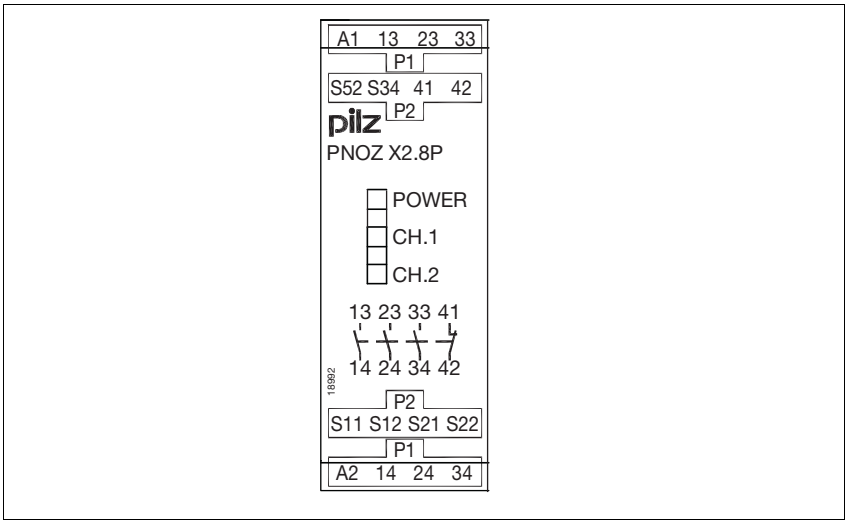

Installation

- The safety relay should be installed in a control cabinet with a protection type of at least IP54.
- Use the notch on the rear of the unit to attach it to a DIN rail.
- Ensure the unit is mounted securely on a vertical DIN rail (35 mm) by using a fixing element (e.g. retaining bracket or an end angle).

Dimensions

* with spring-loaded terminals

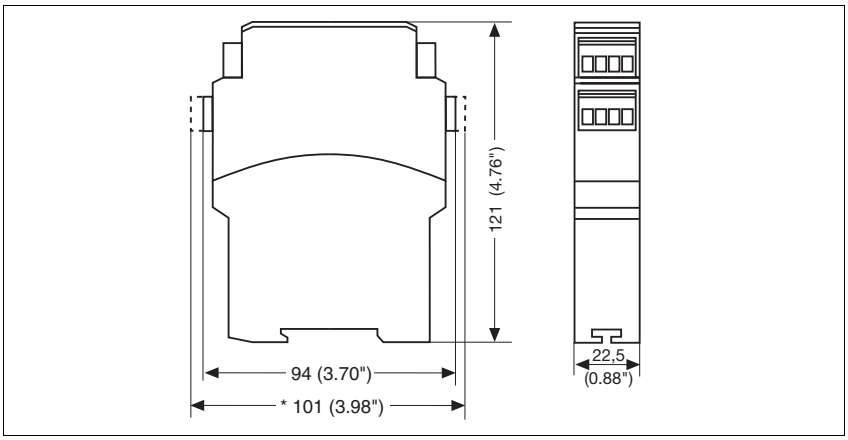

Pilz GmbH & Co. KG, Felix-Wankel-Straße 2, 73760 Ostfildern, Germany
Telephone: +49 711 3409-0, Telefax: +49 711 3409-133, E-Mail: pilz.gmbh@pilz.de

Up to PL e of EN ISO 13849-1
PNOZ X2.8P

Notice

This data sheet is only intended for use during configuration. Please refer to the operating manual for installation and operation.

Service life graph

The service life graphs indicate the number of cycles from which failures due to wear must be expected. The wear is mainly caused by the electrical load; the mechanical load is negligible.

U_B 24 V AC/DC

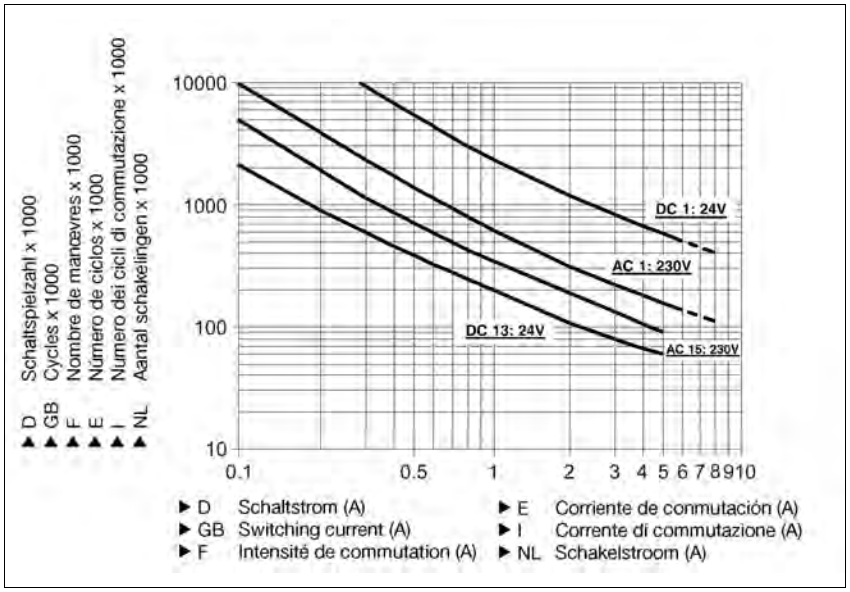

Example

- Inductive load: 0,2 A
- Utilisation category: AC15
- Contact service life: 2,000,000 cycles

Provided the application requires fewer than 2,000,000 cycles, the PFH value (see technical details) can be used in the calculation.

To increase the service life, sufficient spark suppression must be provided on all output contacts. With capacitive loads, any power surges that occur must be noted. With contactors, use freewheel diodes for spark suppression.

Up to PL e of EN ISO 13849-1
PNOZ X2.8P

U_B 24 - 240 VAC/DC

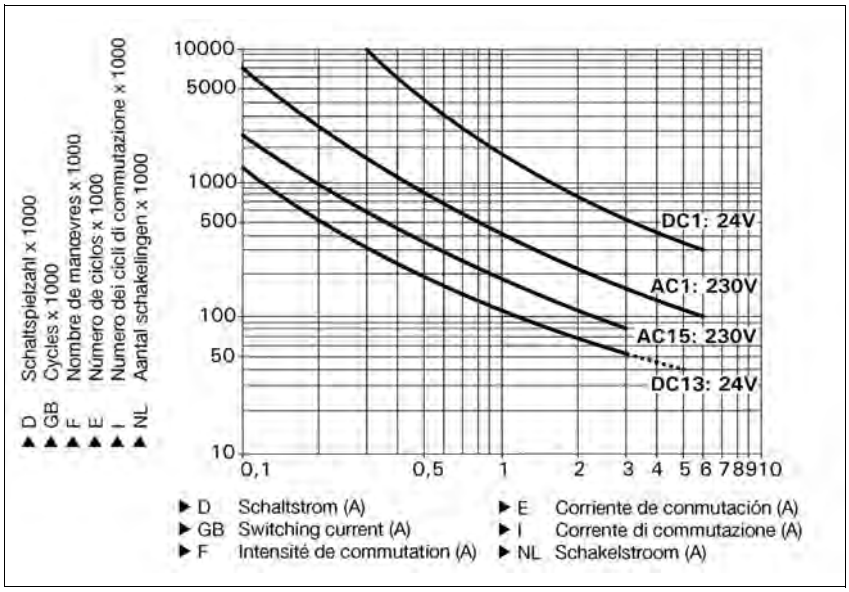

Example
- Inductive load: 0,2 A
- Utilisation category: AC15
- Contact service life: 1,000,000 cycles

Provided the application requires fewer than 1,000,000 cycles, the PFH value (see technical details) can be used in the calculation.

To increase the service life, sufficient spark suppression must be provided on all output contacts. With capacitive loads, any power surges that occur must be noted. With contactors, use freewheel diodes for spark suppression.

Technical details

Electrical data	
Supply voltage	
Supply voltage U_B AC/DC	**24 - 240 V**, **24 V**
Voltage tolerance	**-15 %/+10 %**
Power consumption at U_B AC	**4.5 VA** No. 777302, 787302 **5.5 VA** No. 777301, 787301
Power consumption at U_B DC	**2.0 W** No. 777302, 787302 **2.5 W** No. 777301, 787301
Frequency range AC	**50 - 60 Hz**
Residual ripple DC	**160 %**
Voltage and current at	
Input circuit DC: **24.0 V**	**25.0 mA** No. 777302, 787302 **30.0 mA** No. 777301, 787301
Reset circuit DC: **24.0 V**	**40.0 mA** No. 777301, 787301 **50.0 mA** No. 777302, 787302
Feedback loop DC: **24.0 V**	**40.0 mA** No. 777301, 787301 **50.0 mA** No. 777302, 787302
Number of output contacts	
Safety contacts (S) instantaneous:	**3**
Auxiliary contacts (N/C):	**1**

Pilz GmbH & Co. KG, Felix-Wankel-Straße 2, 73760 Ostfildern, Germany
Telephone: +49 711 3409-0, Telefax: +49 711 3409-133, E-Mail: pilz.gmbh@pilz.de

Up to PL e of EN ISO 13849-1
PNOZ X2.8P

Electrical data	
Utilisation category in accordance with **EN 60947-4-1**	
Safety contacts: AC1 at **240 V**	I_{min}: **0.01 A** , I_{max}: **6.0 A** P_{max}: **1500 VA**
Safety contacts: DC1 at **24 V**	I_{min}: **0.01 A** , I_{max}: **6.0 A** P_{max}: **150 W**
Auxiliary contacts: AC1 at **240 V**	I_{min}: **0.01 A** , I_{max}: **6.0 A** P_{max}: **1500 VA**
Auxiliary contacts: DC1 at **24 V**	I_{min}: **0.01 A** , I_{max}: **6.0 A** P_{max}: **150 W**
Utilisation category in accordance with **EN 60947-5-1**	
Safety contacts: AC15 at **230 V**	I_{max}: **3.0 A** No. 777302, 787302 **5.0 A** No. 777301, 787301
Safety contacts: DC13 at **24 V** (6 cycles/min)	I_{max}: **4.0 A** No. 777302, 787302 **5.0 A** No. 777301, 787301
Auxiliary contacts: AC15 at **230 V**	I_{max}: **3.0 A** No. 777302, 787302 **5.0 A** No. 777301, 787301
Auxiliary contacts: DC13 at **24 V** (6 cycles/min)	I_{max}: **4.0 A** No. 777302, 787302 **5.0 A** No. 777301, 787301
Contact material	**AgCuNi + 0.2 µm Au**
External contact fuse protection (I_K = 1 kA) to **EN 60947-5-1**	
Blow-out fuse, quick	
Safety contacts:	**10 A** No. 777301, 787301 **6 A** No. 777302, 787302
Auxiliary contacts:	**10 A** No. 777301, 787301 **6 A** No. 777302, 787302
Blow-out fuse, slow	
Safety contacts:	**4 A** No. 777302, 787302 **6 A** No. 777301, 787301
Auxiliary contacts:	**4 A** No. 777302, 787302 **6 A** No. 777301, 787301
Circuit breaker 24 VAC/DC, characteristic B/C	
Safety contacts:	**4 A** No. 777302, 787302 **6 A** No. 777301, 787301
Auxiliary contacts:	**4 A** No. 777302, 787302 **6 A** No. 777301, 787301
Max. overall cable resistance R_{lmax} input circuits, reset circuits	
single-channel at U_B DC	**30 Ohm** No. 777301, 787301 **45 Ohm** No. 777302, 787302
single-channel at U_B AC	**100 Ohm** No. 777301, 787301 **45 Ohm** No. 777302, 787302
dual-channel without detect. of shorts across contacts at U_B DC	**50 Ohm** No. 777301, 787301 **80 Ohm** No. 777302, 787302
dual-channel without detect. of shorts across contacts at U_B AC	**100 Ohm** No. 777301, 787301 **80 Ohm** No. 777302, 787302
dual-channel with detect. of shorts across contacts at U_B DC	**15 Ohm**
dual-channel with detect. of shorts across contacts at U_B AC	**15 Ohm**
Min. input resistance when switching on	**209 Ohm** No. 777302, 787302 **88 Ohm** No. 777301, 787301
Safety-related characteristic data	
PL in accordance with **EN ISO 13849-1: 2006**	**PL e** (**Cat. 4**)
Category in accordance with **EN 954-1**	**Cat. 4**
SIL CL in accordance with **EN IEC 62061**	**SIL CL 3**
PFH in accordance with **EN IEC 62061**	**2.31E-09**
SIL in accordance with **IEC 61511**	**SIL 3**
PFD in accordance with **IEC 61511**	**2.03E-06**
T_M [year] in accordance with **EN ISO 13849-1: 2006**	**20**

Up to PL e of EN ISO 13849-1
PNOZ X2.8P

Times	
Switch-on delay	
with automatic reset typ.	**250 ms** No. 777301, 787301 **340 ms** No. 777302, 787302
with automatic reset max.	**400 ms** No. 777302, 787302 **450 ms** No. 777301, 787301
with automatic reset after power on typ.	**250 ms** No. 777301, 787301 **600 ms** No. 777302, 787302
with automatic reset after power on max.	**450 ms** No. 777301, 787301 **800 ms** No. 777302, 787302
with manual reset typ.	**125 ms** No. 777301, 787301 **180 ms** No. 777302, 787302
with manual reset max.	**400 ms** No. 777302, 787302 **450 ms** No. 777301, 787301
Delay-on de-energisation	
with E-STOP typ.	**10 ms** No. 777302, 787302 **15 ms** No. 777301, 787301
with E-STOP max.	**20 ms** No. 777302, 787302 **30 ms** No. 777301, 787301
with power failure typ.	**60 ms** No. 777301, 787301
with power failure max.	**100 ms** No. 777301, 787301
with power failure typ. U_B AC/DC: **24 V** No. 777302, 787302	**180 ms** No. 777302, 787302
with power failure max. U_B AC/DC: **24 V** No. 777302, 787302	**230 ms** No. 777302, 787302
with power failure typ. U_B AC : **240 V**	**1,100 ms** No. 777302, 787302
with power failure max. U_B AC : **240 V**	**1500 ms** No. 777302, 787302
Recovery time at max. switching frequency 1/s	
after E-STOP	**50 ms**
after power failure	**200 ms** No. 777301, 787301 **250 ms** No. 777302, 787302
after power failure on universal power supply	**1500 ms** No. 777302, 787302
Min. start pulse duration with a monitored reset	
with rising edge	**30 ms**
Simultaneity, channel 1 and 2	∞
Supply interruption before de-energisation	**20 ms**
Environmental data	
EMC	**EN 60947-5-1**, **EN 61000-6-2**, **EN 61000-6-4**
Vibration to **EN 60068-2-6**	
Frequency	**10 - 55 Hz**
Amplitude	**0.35 mm**
Climatic suitability	**EN 60068-2-78**
Airgap creepage in accordance with **EN 60947-1**	
Pollution degree	**2**
Overvoltage category	**III / II**
Rated insulation voltage	**250 V**
Rated impulse withstand voltage	**4.00 kV**
Ambient temperature	**-10 - 55 °C** No. 777302, 787302 **-35 - 55 °C** No. 777301, 787301
Storage temperature	**-40 - 85 °C**
Protection type	
Mounting (e.g. cabinet)	**IP54**
Housing	**IP40**
Terminals	**IP20**
Mechanical data	
Housing material	
Housing	**PPO UL 94 V0**
Front	**ABS UL 94 V0**

Pilz GmbH & Co. KG, Felix-Wankel-Straße 2, 73760 Ostfildern, Germany
Telephone: +49 711 3409-0, Telefax: +49 711 3409-133, E-Mail: pilz.gmbh@pilz.de

Up to PL e of EN ISO 13849-1
PNOZ X2.8P

Mechanical data	
Cross section of external conductors with screw terminals	
1 core flexible	**0.25 - 2.50 mm² , 24 - 12 AWG** No. 777301, 777302
2 core, same cross section, flexible:	
with crimp connectors, without insulating sleeve	**0.25 - 1.00 mm² , 24 - 16 AWG** No. 777301, 777302
without crimp connectors or with TWIN crimp connectors	**0.20 - 1.50 mm² , 24 - 16 AWG** No. 777301, 777302
Torque setting with screw terminals	**0.50 Nm** No. 777301, 777302
Cross section of external conductors with spring-loaded terminals: Flexible with/without crimp connectors	**0.20 - 1.50 mm² , 24 - 16 AWG** No. 787301, 787302
Spring-loaded terminals: Terminal points per connection	**2** No. 787301, 787302
Stripping length	**8 mm** No. 787301, 787302
Dimensions	
Height	**101.0 mm** No. 787301, 787302 **94.0 mm** No. 777301, 777302
Width	**22.5 mm**
Depth	**121.0 mm**
Weight	**190 g** No. 777301, 787301 **205 g** No. 787302 **210 g** No. 777302

No. stands for order number.

It is essential to consider the relay's service life graphs. The relay outputs' safety-related characteristic data is only valid if the values in the service life graphs are met.

The PFH value depends on the switching frequency and the load on the relay output.
If the service life graphs are not accessible, the stated PFH value can be used irrespective of the switching frequency and the load, as the PFH value already considers the relay's B10d value as well as the failure rates of the other components.

All the units used within a safety function must be considered when calculating the safety characteristic data.

INFORMATION
A safety function's SIL/PL values are **not** identical to the SIL/PL values of the units that are used and may be different. We recommend that you use the PAScal software tool to calculate the safety function's SIL/PL values.

The standards current on **2009-12** apply.

Up to PL e of EN ISO 13849-1
PNOZ X2.8P

Conventional thermal current while loading several contacts

Number of contacts	I_{th} per contact at U_B DC	I_{th} at U_B AC
1	**6.00 A**	**6.00 A**
2	**6.00 A**	**4.00 A** No. 777301, 787301 **6.00 A** No. 777302, 787302
3	**4.50 A** No. 777302, 787302 **5.00 A** No. 777301, 787301	**3.50 A** No. 777301, 787301 **4.50 A** No. 777302, 787302

Order reference

Type	Features		Terminals	Order no.
PNOZ X2.8P C	24 VAC	24 VDC	Spring-loaded terminals	787 301
PNOZ X2.8P	24 VAC	24 VDC	Screw terminals	777 301
PNOZ X2.8P C	24 - 240 VAC	24 - 240 VDC	Spring-loaded terminals	787 302
PNOZ X2.8P	24 - 240 VAC	24 - 240 VDC	Screw terminals	777 302

Pilz GmbH & Co. KG, Felix-Wankel-Straße 2, 73760 Ostfildern, Germany
Telephone: +49 711 3409-0, Telefax: +49 711 3409-133, E-Mail: pilz.gmbh@pilz.de

Up to PL e of EN ISO 13849-1
PNOZ X2.9P



Safety relay for monitoring E-STOP pushbuttons, safety gates and light beam devices

Approvals

	PNOZ X2.9P
c UL us LISTED	◆
TÜV SÜD	◆
CCC	◆

Unit features

- Positive-guided relay outputs:
  - 3 safety contacts (N/O), instantaneous
  - 1 auxiliary contact (N/C), instantaneous
- Connection options for:
  - E-STOP pushbutton
  - Safety gate limit switch
  - Reset button
  - Light barriers
- LED indicator for:
  - Supply voltage
  - Switch status channel 1/2
- Plug-in connection terminals (either spring-loaded terminal or screw terminal)
- See order reference for unit types

Unit description

The safety relay meets the requirements of EN 60947-5-1, EN 60204-1 and VDE 0113-1 and may be used in applications with
- E-STOP pushbuttons
- Safety gates
- Light beam devices

Safety features

The relay meets the following safety requirements:
- The circuit is redundant with built-in self-monitoring.
- The safety function remains effective in the case of a component failure.
- The correct opening and closing of the safety function relays is tested automatically in each on-off cycle.
- No galvanic isolation between supply voltage and input circuit

Block diagram

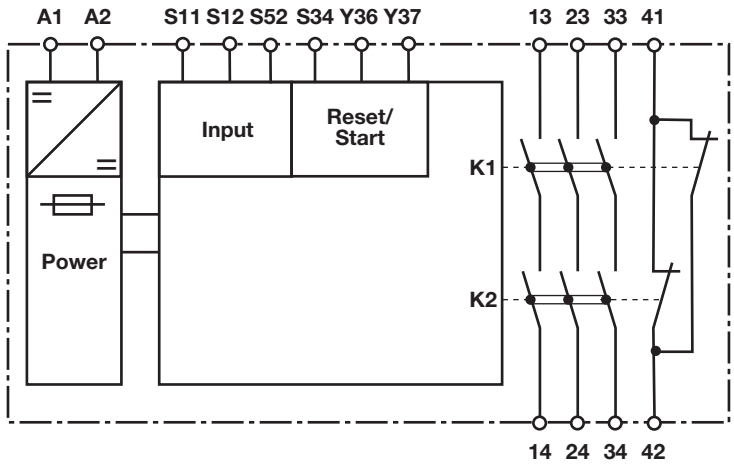

Up to PL e of EN ISO 13849-1
PNOZ X2.9P

Function description

- Single-channel operation: no redundancy in the input circuit, earth faults in the reset circuit are detected.
- Dual-channel operation without detection of shorts across contacts: redundant input circuit, detects
  – earth faults in the reset and input circuit,
  – short circuits in the input circuit and, with a monitored reset, in the reset circuit too.
- Automatic start: Unit is active once the input circuit has been closed.
- Manual reset: Unit is active once the input circuit is closed and then the reset circuit is closed.
- Monitored reset: Unit is active once the input circuit is closed and once the reset circuit is closed after the waiting period has elapsed (see technical details).
- Increase in the number of available instantaneous safety contacts by connecting contact expansion modules or external contactors.

Timing diagram

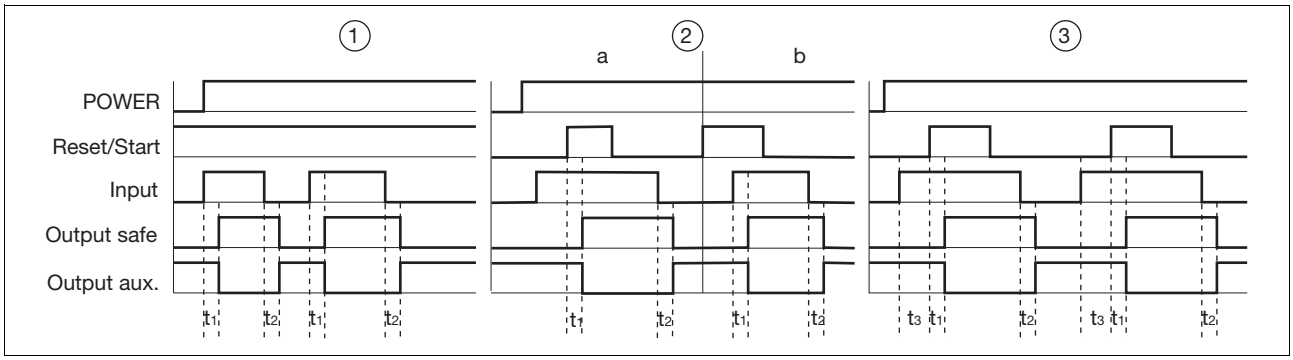

Key

- Power: Supply voltage
- Reset/start: Reset circuit S12-S34, Y36-Y37
- Input: Input circuits S11, S12, S52
- Output safe: Safety outputs 13-14, 23-24, 33-34
- Output aux: Auxiliary contacts 41-42
- ①: Automatic reset
- ②: Manual reset
- ③: Monitored reset
- a: Input circuit closes before reset circuit
- b: Reset circuit closes before input circuit
- t_1: Switch-on delay
- t_2: Delay-on de-energisation
- t_3: Waiting period

Wiring

Please note:

- Information given in the “Technical details” must be followed.
- Outputs 13-14, 23-24, 33-34 are safety contacts, output 41-42 is an auxiliary contact (e.g. for display).
- To prevent contact welding, a fuse should be connected before the output contacts (see technical details).
- Calculation of the max. cable runs l_{max} in the input circuit:

$$l_{max} = \frac{R_{lmax}}{R_l / km}$$

  R_{lmax} = max. overall cable resistance (see technical details)
  R_l /km = cable resistance/km
- Use copper wire that can withstand 60/75 °C.
- Sufficient fuse protection must be provided on all output contacts with capacitive and inductive loads.

Pilz GmbH & Co. KG, Felix-Wankel-Straße 2, 73760 Ostfildern, Germany
Telephone: +49 711 3409-0, Telefax: +49 711 3409-133, E-Mail: pilz.gmbh@pilz.de
1002002-EN-02-2011-01

Up to PL e of EN ISO 13849-1
PNOZ X2.9P

Preparing for operation

- Supply voltage

Supply voltage	AC	DC
		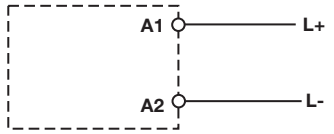

- Input circuit

Input circuit	Single-channel	Dual-channel
E-STOP **without** detection of shorts across contacts	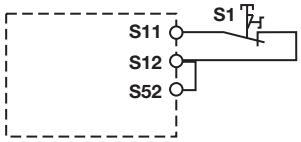	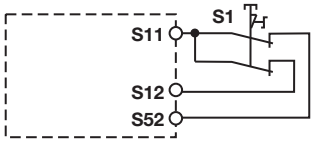
E-STOP **with** detection of shorts across contacts		
Safety gate **without** detection of shorts across contacts	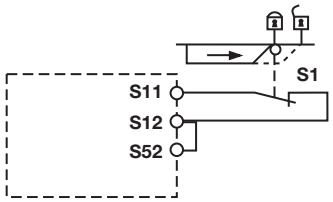	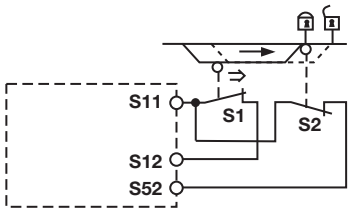
Safety gate **with** detection of shorts across contacts		
Light beam device **with** detection of shorts across contacts via ESPE		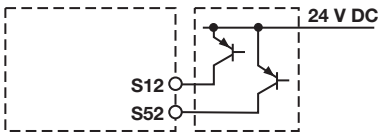

Up to PL e of EN ISO 13849-1
PNOZ X2.9P

▸ Reset circuit

Reset circuit	E-STOP wiring (single-channel) Safety gate (single-channel)	E-STOP wiring (dual-channel) Safety gate (dual-channel)
Automatic reset		
Manual reset	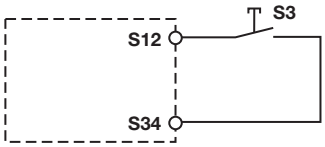	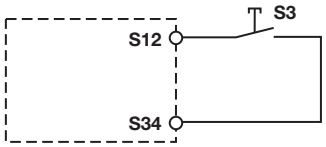
Monitored reset	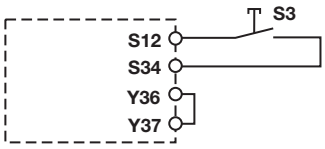	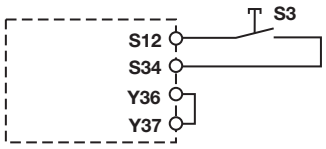

▸ Feedback circuit

Feedback circuit	Automatic reset	Manual reset
Contacts from external contactors	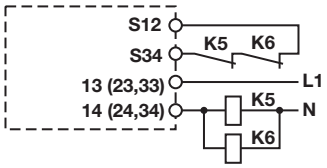	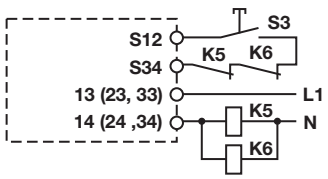

▸ Key

S1/S2	E-STOP/safety gate switch
S3	Reset button
	Switch operated
	Gate open
	Gate closed

Pilz GmbH & Co. KG, Felix-Wankel-Straße 2, 73760 Ostfildern, Germany
Telephone: +49 711 3409-0, Telefax: +49 711 3409-133, E-Mail: pilz.gmbh@pilz.de

Up to PL e of EN ISO 13849-1
PNOZ X2.9P

Terminal configuration

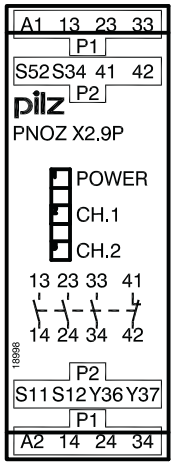

Installation

- The safety relay should be installed in a control cabinet with a protection type of at least IP54.
- Use the notch on the rear of the unit to attach it to a DIN rail.
- Ensure the unit is mounted securely on a vertical DIN rail (35 mm) by using a fixing element (e.g. retaining bracket or an end angle).

Dimensions in mm (")

* with spring-loaded terminals

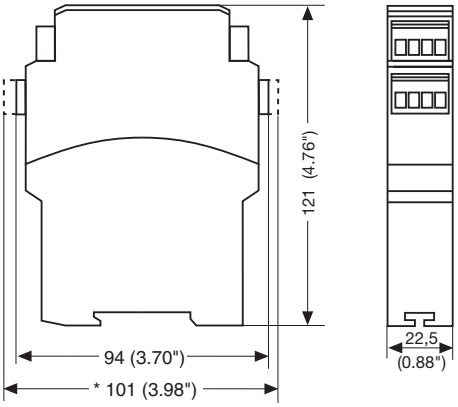

Up to PL e of EN ISO 13849-1
PNOZ X2.9P

Notice

This data sheet is only intended for use during configuration. Please refer to the operating manual for installation and operation.

Service life graph

The service life graphs indicate the number of cycles from which failures due to wear must be expected. The wear is mainly caused by the electrical load; the mechanical load is negligible.

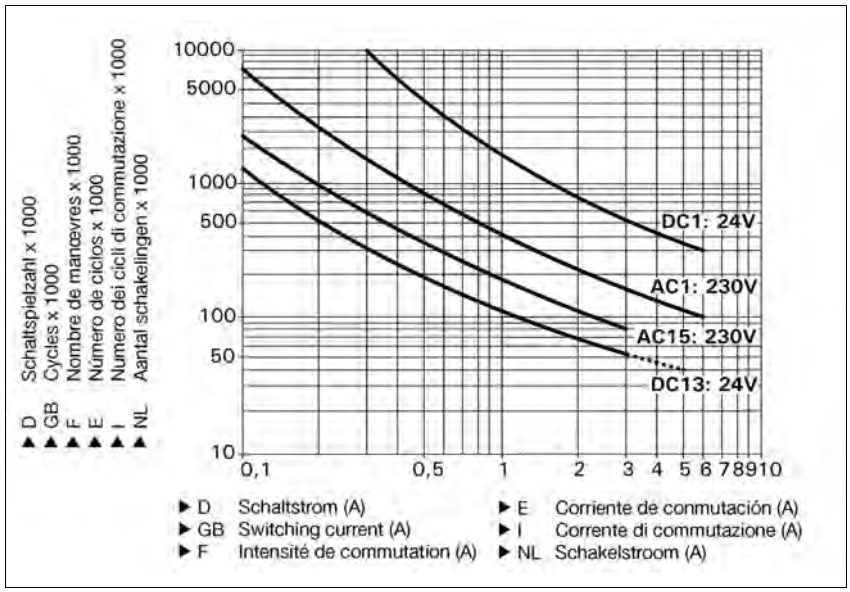

Example
- Inductive load: 0,2 A
- Utilisation category: AC15
- Contact service life: 1,000,000 cycles

Provided the application requires fewer than 1,000,000 cycles, the PFH value (see technical details) can be used in the calculation.

To increase the service life, sufficient spark suppression must be provided on all output contacts. With capacitive loads, any power surges that occur must be noted. With contactors, use freewheel diodes for spark suppression.

Technical details

Electrical data	
Supply voltage	
Supply voltage U_B DC	**24 V**
Voltage tolerance	**-15 %/+10 %**
Power consumption at U_B DC	**2.0 W**
Residual ripple DC	**160 %**
Voltage and current at	
Input circuit DC: **24.0 V**	**30.0 mA**
Reset circuit DC: **24.0 V**	**60.0 mA**
Feedback loop DC: **24.0 V**	**60.0 mA**
Number of output contacts	
Safety contacts (S) instantaneous:	**3**
Auxiliary contacts (N/C):	**1**

Pilz GmbH & Co. KG, Felix-Wankel-Straße 2, 73760 Ostfildern, Germany
Telephone: +49 711 3409-0, Telefax: +49 711 3409-133, E-Mail: pilz.gmbh@pilz.de
1002002-EN-02-2011-01

Up to PL e of EN ISO 13849-1
PNOZ X2.9P

Electrical data	
Utilisation category in accordance with **EN 60947-4-1**	
Safety contacts: AC1 at **240 V**	I_{min}: **0.01 A** , I_{max}: **6.0 A** P_{max}: **1500 VA**
Safety contacts: DC1 at **24 V**	I_{min}: **0.01 A** , I_{max}: **6.0 A** P_{max}: **150 W**
Auxiliary contacts: AC1 at **240 V**	I_{min}: **0.01 A** , I_{max}: **6.0 A** P_{max}: **1500 VA**
Auxiliary contacts: DC1 at **24 V**	I_{min}: **0.01 A** , I_{max}: **6.0 A** P_{max}: **150 W**
Utilisation category in accordance with **EN 60947-5-1**	
Safety contacts: AC15 at **230 V**	I_{max}: **3.0 A**
Safety contacts: DC13 at **24 V** (6 cycles/min)	I_{max}: **4.0 A**
Auxiliary contacts: AC15 at **230 V**	I_{max}: **3.0 A**
Auxiliary contacts: DC13 at **24 V** (6 cycles/min)	I_{max}: **4.0 A**
Contact material	**AgSnO2 + 0.2 µm Au**
External contact fuse protection (I_K = 1 kA) to **EN 60947-5-1**	
Blow-out fuse, quick	
Safety contacts:	**6 A**
Auxiliary contacts:	**6 A**
Blow-out fuse, slow	
Safety contacts:	**4 A**
Auxiliary contacts:	**4 A**
Circuit breaker 24 VAC/DC, characteristic B/C	
Safety contacts:	**4 A**
Auxiliary contacts:	**4 A**
Max. overall cable resistance R_{lmax} input circuits, reset circuits	
single-channel at U_B DC	**50 Ohm**
dual-channel without detect. of shorts across contacts at U_B DC	**80 Ohm**
Min. input resistance when switching on	**205 Ohm**
Safety-related characteristic data	
PL in accordance with **EN ISO 13849-1: 2006**	**PL e** (**Cat. 4**)
Category in accordance with **EN 954-1**	**Cat. 4**
SIL CL in accordance with **EN IEC 62061**	**SIL CL 3**
PFH in accordance with **EN IEC 62061**	**2.31E-09**
SIL in accordance with **IEC 61511**	**SIL 3**
PFD in accordance with **IEC 61511**	**2.03E-06**
T_M [year] in accordance with **EN ISO 13849-1: 2006**	**20**
Times	
Switch-on delay	
with automatic reset typ.	**200 ms**
with automatic reset max.	**400 ms**
with automatic reset after power on typ.	**200 ms**
with automatic reset after power on max.	**400 ms**
with manual reset typ.	**100 ms**
with manual reset max.	**400 ms**
on monitored reset with rising edge typ.	**30 ms**
on monitored reset with rising edge max.	**50 ms**
Delay-on de-energisation	
with E-STOP typ.	**10 ms**
with E-STOP max.	**20 ms**
with power failure typ.	**70 ms**
with power failure max.	**120 ms**
Recovery time at max. switching frequency 1/s	
after E-STOP	**50 ms**
after power failure	**150 ms**

Up to PL e of EN ISO 13849-1
PNOZ X2.9P

Times	
Waiting period with a monitored reset	
with rising edge	**200 ms**
Min. start pulse duration with a monitored reset	
with rising edge	**30 ms**
Simultaneity, channel 1 and 2	∞
Supply interruption before de-energisation	**20 ms**
Environmental data	
EMC	**EN 60947-5-1**, **EN 61000-6-2**
Vibration to **EN 60068-2-6**	
Frequency	**10 - 55 Hz**
Amplitude	**0.35 mm**
Climatic suitability	**EN 60068-2-78**
Airgap creepage in accordance with **EN 60947-1**	
Pollution degree	**2**
Overvoltage category	**III / II**
Rated insulation voltage	**250 V**
Rated impulse withstand voltage	**4.00 kV**
Ambient temperature	**-10 - 55 °C**
Storage temperature	**-40 - 85 °C**
Protection type	
Mounting (e.g. cabinet)	**IP54**
Housing	**IP40**
Terminals	**IP20**
Mechanical data	
Housing material	
Housing	**PPO UL 94 V0**
Front	**ABS UL 94 V0**
Cross section of external conductors with screw terminals	
1 core flexible	**0.25 - 2.50 mm² , 24 - 12 AWG** No. 777300
2 core, same cross section, flexible:	
with crimp connectors, without insulating sleeve	**0.25 - 1.00 mm² , 24 - 16 AWG** No. 777300
without crimp connectors or with TWIN crimp connectors	**0.20 - 1.50 mm² , 24 - 16 AWG** No. 777300
Torque setting with screw terminals	**0.50 Nm** No. 777300
Cross section of external conductors with spring-loaded terminals: Flexible with/without crimp connectors	**0.20 - 1.50 mm² , 24 - 16 AWG** No. 787300
Spring-loaded terminals: Terminal points per connection	**2** No. 787300
Stripping length	**8 mm** No. 787300
Dimensions	
Height	**101.0 mm** No. 787300 **94.0 mm** No. 777300
Width	**22.5 mm**
Depth	**121.0 mm**
Weight	**175 g** No. 787300 **180 g** No. 777300

No. stands for order number.

It is essential to consider the relay's service life graphs. The relay outputs' safety-related characteristic data is only valid if the values in the service life graphs are met.

The PFH value depends on the switching frequency and the load on the relay output.
If the service life graphs are not accessible, the stated PFH value can be used irrespective of the switching frequency and the load, as the PFH value already considers the relay's B10d value as well as the failure rates of the other components.

All the units used within a safety function must be considered when calculating the safety characteristic data.

Pilz GmbH & Co. KG, Felix-Wankel-Straße 2, 73760 Ostfildern, Germany
Telephone: +49 711 3409-0, Telefax: +49 711 3409-133, E-Mail: pilz.gmbh@pilz.de

Up to PL e of EN ISO 13849-1
PNOZ X2.9P

INFORMATION
A safety function's SIL/PL values are **not** identical to the SIL/PL values of the units that are used and may be different. We recommend that you use the PAScal software tool to calculate the safety function's SIL/PL values.

The standards current on **2009-11** apply.

Conventional thermal current while loading several contacts

Number of contacts	I_{th} per contact at U_B DC
1	**6.00 A**
2	**6.00 A**
3	**4.50 A**

Order reference

Type	Features		Terminals	Order no.
PNOZ X2.9P C		24 VDC	Spring-loaded terminals	787 300
PNOZ X2.9P		24 VDC	Screw terminals	777 300

Up to PL e of EN ISO 13849-1
PNOZ X3P



Safety relay for monitoring E-STOP pushbuttons, safety gates and light beam devices

Approvals

	PNOZ X3P
cULus LISTED	◆
TÜV	◆
CCC	◆

Unit features

- Positive-guided relay outputs:
  - 3 safety contacts (N/O), instantaneous
  - 1 auxiliary contact (N/C), instantaneous
- 1 semiconductor output
- Connection options for:
  - E-STOP pushbutton
  - Safety gate limit switch
  - Reset button
  - Light barriers
- LED indicator for:
  - Switch status channel 1/2
  - Supply voltage
- Semiconductor output signals:
  - Switch status channel 1/2
- Plug-in connection terminals (either spring-loaded terminal or screw terminal)

Unit description

The safety relay meets the requirements of EN 60947-5-1, EN 60204-1 and VDE 0113-1 and may be used in applications with

- E-STOP pushbuttons
- Safety gates
- Light beam devices

Safety features

The relay meets the following safety requirements:

- The circuit is redundant with built-in self-monitoring.
- The safety function remains effective in the case of a component failure.
- The correct opening and closing of the safety function relays is tested automatically in each on-off cycle.

Block diagram

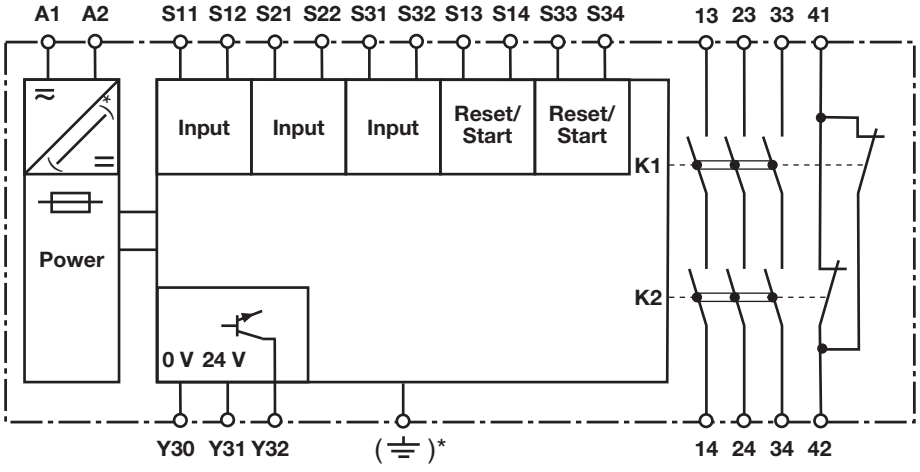

*only with U_B 24 - 240 VAC/DC

Pilz GmbH & Co. KG, Felix-Wankel-Straße 2, 73760 Ostfildern, Germany
Telephone: +49 711 3409-0, Telefax: +49 711 3409-133, E-Mail: pilz.gmbh@pilz.de
1002006-EN-02-2011-09

Up to PL e of EN ISO 13849-1
PNOZ X3P

Function description

- Single-channel operation: no redundancy in the input circuit, earth faults in the reset and input circuit are detected.
- Dual-channel operation without detection of shorts across contacts: redundant input circuit, detects
  - earth faults in the reset and input circuit,
  - short circuits in the input circuit and, with a monitored reset, in the reset circuit too.
- Dual-channel operation with detection of shorts across contacts: redundant input circuit, detects
  - earth faults in the reset and input circuit,
  - short circuits in the input circuit and, with a monitored reset, in the reset circuit too,
  - shorts between contacts in the input circuit.
- Automatic start: Unit is active once the input circuit has been closed.
- Monitored reset: Unit is active once the input circuit is closed and once the reset circuit is closed after the waiting period has elapsed (see technical details).
- Increase in the number of available instantaneous safety contacts by connecting contact expansion modules or external contactors.

Timing diagram

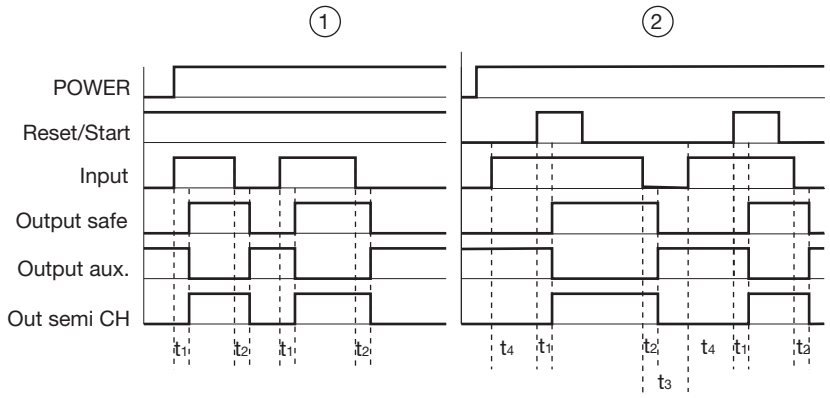

Key

- Power: Supply voltage
- Reset/Start: Reset circuit S13-S14, S33-S34
- Input: Input circuits S11-S12, S21-S22, S31-S32
- Output safe: Safety contacts 13-14, 23-24, 33-34
- Output aux: Auxiliary contacts 41-42
- Out semi CH: Semiconductor output switch status channel 1/2
- ①: Automatic reset
- ②: Monitored reset
- t_1: Switch-on delay
- t_2: Delay-on de-energisation
- t_3: Recovery time
- t_4: Waiting period

Wiring

Please note:

- Information given in the “Technical details” must be followed.
- Outputs 13-14, 23-24, 33-34 are safety contacts, output 41-42 is an auxiliary contact (e.g. for display).
- To prevent contact welding, a fuse should be connected before the output contacts (see technical details).
- Calculation of the max. cable runs I_{max} in the input circuit:

$$I_{max} = \frac{R_{lmax}}{R_l / km}$$

R_{lmax} = max. overall cable resistance (see technical details)

R_l /km = cable resistance/km

- Use copper wire that can withstand 60/75 °C.
- Sufficient fuse protection must be provided on all output contacts with capacitive and inductive loads.

Pilz GmbH & Co. KG, Felix-Wankel-Straße 2, 73760 Ostfildern, Germany
Telephone: +49 711 3409-0, Telefax: +49 711 3409-133, E-Mail: pilz.gmbh@pilz.de

Up to PL e of EN ISO 13849-1
PNOZ X3P

Preparing for operation

- Supply voltage

Supply voltage	AC	DC
	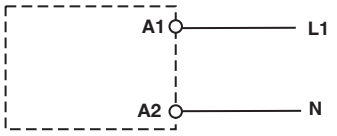	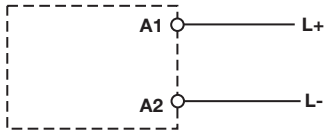

- Input circuit

Input circuit	Single-channel	Dual-channel
E-STOP **without** detection of shorts across contacts	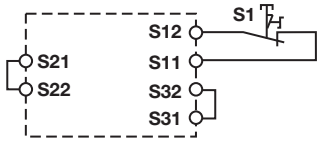	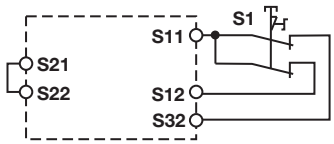
E-STOP **with** detection of shorts across contacts	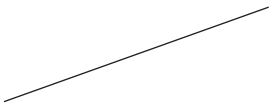	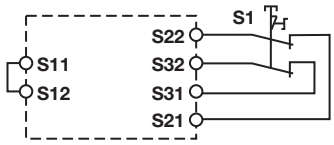
Safety gate **without** detection of shorts across contacts	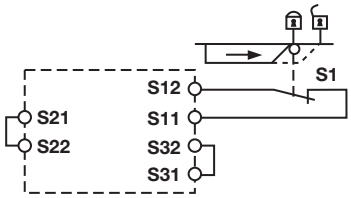	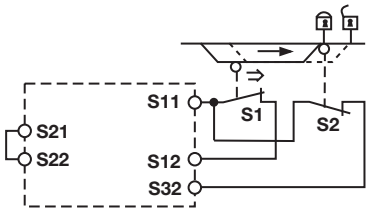
Safety gate **with** detection of shorts across contacts	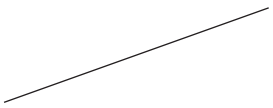	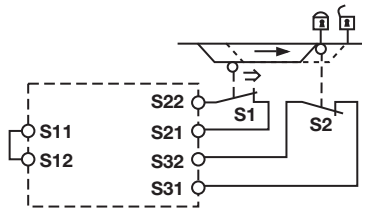
Light beam device **with** detection of shorts across contacts via ESPE (not on units with a universal power supply)	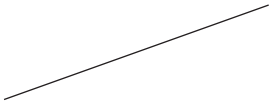	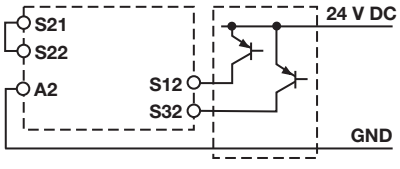

Pilz GmbH & Co. KG, Felix-Wankel-Straße 2, 73760 Ostfildern, Germany
Telephone: +49 711 3409-0, Telefax: +49 711 3409-133, E-Mail: pilz.gmbh@pilz.de

Up to PL e of EN ISO 13849-1
PNOZ X3P

▸ Reset circuit

Reset circuit	E-STOP wiring (single-channel) Safety gate (single-channel)	E-STOP wiring (dual-channel) Safety gate (dual-channel)
Automatic reset		
Monitored reset	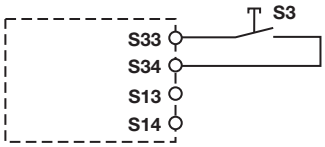	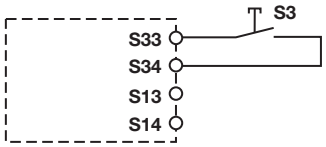

▸ Feedback circuit

Feedback circuit	Automatic reset	Monitored reset
Contacts from external contactors	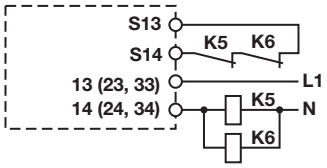	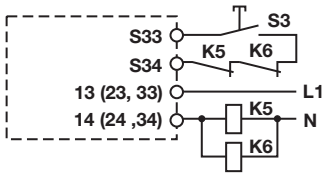

▸ Semiconductor output

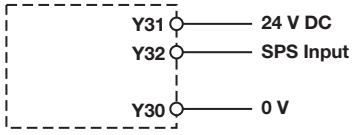

▸ Key

S1/S2	E-STOP/safety gate switch
S3	Reset button
	Switch operated
	Gate open
	Gate closed

Up to PL e of EN ISO 13849-1
PNOZ X3P

Terminal configuration

U_B 24 VAC/DC

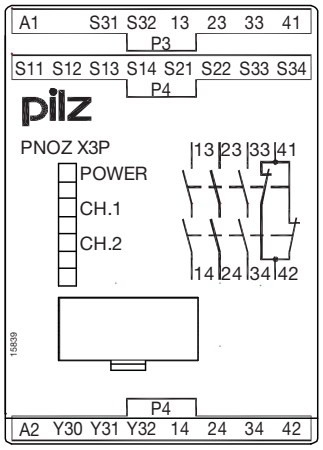

U_B 24 – 240 VAC/DC

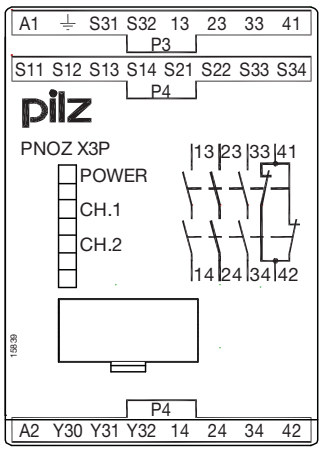

Installation

- The safety relay should be installed in a control cabinet with a protection type of at least IP54.
- Use the notch on the rear of the unit to attach it to a DIN rail.
- Ensure the unit is mounted securely on a vertical DIN rail (35 mm) by using a fixing element (e.g. retaining bracket or an end angle).

Dimensions

* with spring-loaded terminals

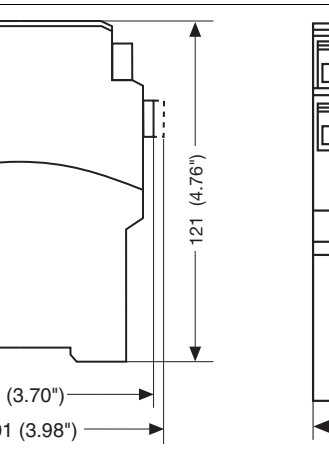

Pilz GmbH & Co. KG, Felix-Wankel-Straße 2, 73760 Ostfildern, Germany
Telephone: +49 711 3409-0, Telefax: +49 711 3409-133, E-Mail: pilz.gmbh@pilz.de

Up to PL e of EN ISO 13849-1
PNOZ X3P

Notice

This data sheet is only intended for use during configuration. Please refer to the operating manual for installation and operation.

Service life graph

The service life graphs indicate the number of cycles from which failures due to wear must be expected. The wear is mainly caused by the electrical load; the mechanical load is negligible.

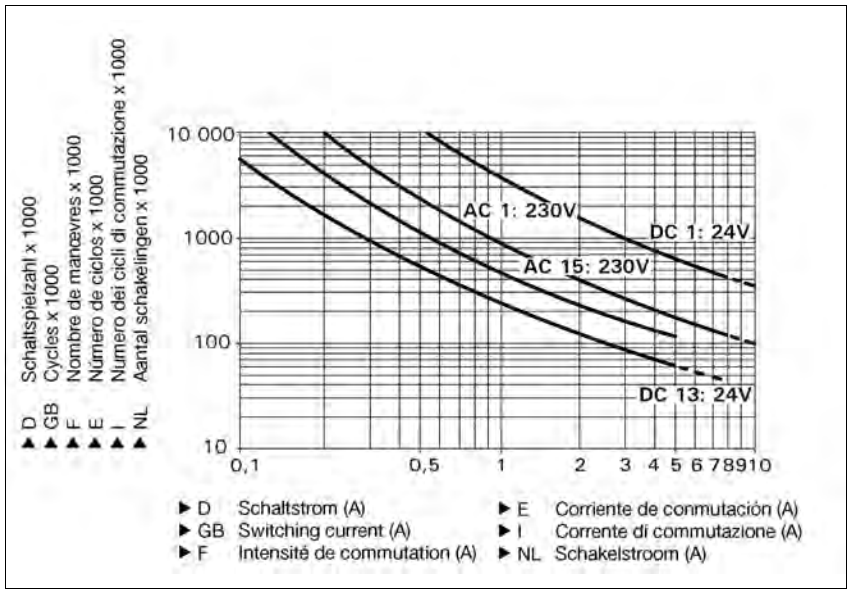

Example
- Inductive load: 0,2 A
- Utilisation category: AC15
- Contact service life: 4,000,000 cycles

Provided the application requires fewer than 4,000,000 cycles, the PFH value (see technical details) can be used in the calculation.

To increase the service life, sufficient spark suppression must be provided on all output contacts. With capacitive loads, any power surges that occur must be noted. With contactors, use freewheel diodes for spark suppression.

Technical details

Electrical data	
Supply voltage	
Supply voltage U_B AC/DC	**24 - 240 V**, **24 V**
Voltage tolerance	**-15 %/+10 %**
Power consumption at U_B AC	**5.0 VA**
Power consumption at U_B DC	**2.5 W**
Frequency range AC	**50 - 60 Hz**
Residual ripple DC	**160 %**
Voltage and current at	
Input circuit DC: **24.0 V**	**35.0 mA** No. 777313, 787313 **40.0 mA** No. 777310, 787310
Reset circuit DC: **24.0 V**	**50.0 mA** No. 777313, 787313 **70.0 mA** No. 777310, 787310
Feedback loop DC: **24.0 V**	**20.0 mA**

Up to PL e of EN ISO 13849-1
PNOZ X3P

Electrical data	
Number of output contacts	
Safety contacts (S) instantaneous:	**3**
Auxiliary contacts (N/C):	**1**
Utilisation category in accordance with **EN 60947-4-1**	
Safety contacts: AC1 at **240 V**	I_{min}: **0.01 A** , I_{max}: **8.0 A** P_{max}: **2000 VA**
Safety contacts: DC1 at **24 V**	I_{min}: **0.01 A** , I_{max}: **8.0 A** P_{max}: **200 W**
Auxiliary contacts: AC1 at **240 V**	I_{min}: **0.01 A** , I_{max}: **8.0 A** P_{max}: **2000 VA**
Auxiliary contacts: DC1 at **24 V**	I_{min}: **0.01 A** , I_{max}: **8.0 A** P_{max}: **200 W**
Utilisation category in accordance with **EN 60947-5-1**	
Safety contacts: AC15 at **230 V**	I_{max}: **5.0 A**
Safety contacts: DC13 at **24 V** (6 cycles/min)	I_{max}: **6.0 A**
Auxiliary contacts: AC15 at **230 V**	I_{max}: **5.0 A**
Auxiliary contacts: DC13 at **24 V** (6 cycles/min)	I_{max}: **6.0 A**
Contact material	**AgSnO2 + 0.2 µm Au**
External contact fuse protection (I_K = 1 kA) to **EN 60947-5-1**	
Blow-out fuse, quick	
Safety contacts:	**10 A**
Auxiliary contacts:	**10 A**
Blow-out fuse, slow	
Safety contacts:	**6 A**
Auxiliary contacts:	**6 A**
Circuit breaker 24 VAC/DC, characteristic B/C	
Safety contacts:	**6 A**
Auxiliary contacts:	**6 A**
Semiconductor outputs (short circuit proof)	**24.0 V** DC, **20 mA**
External supply voltage	**24.0 V** DC
Voltage tolerance	**-20 %/+20 %**
Max. overall cable resistance R_{lmax} input circuits, reset circuits	
single-channel at U_B DC	**150 Ohm** No. 777310, 787310 **200 Ohm** No. 777313, 787313
single-channel at U_B AC	**180 Ohm** No. 777310, 787310 **200 Ohm** No. 777313, 787313
dual-channel without detect. of shorts across contacts at U_B DC	**300 Ohm** No. 777310, 787310 **400 Ohm** No. 777313, 787313
dual-channel without detect. of shorts across contacts at U_B AC	**360 Ohm** No. 777310, 787310 **400 Ohm** No. 777313, 787313
dual-channel with detect. of shorts across contacts at U_B DC	**15 Ohm** No. 777310, 787310 **30 Ohm** No. 777313, 787313
dual-channel with detect. of shorts across contacts at U_B AC	**30 Ohm**
Min. input resistance when switching on	**90 Ohm**
Safety-related characteristic data	
PL in accordance with **EN ISO 13849-1: 2006**	**PL e** (**Cat. 4**)
Category in accordance with **EN 954-1**	**Cat. 4**
SIL CL in accordance with **EN IEC 62061**	**SIL CL 3**
PFH in accordance with **EN IEC 62061**	**2.31E-09**
SIL in accordance with **IEC 61511**	**SIL 3**
PFD in accordance with **IEC 61511**	**2.03E-06**
T_M [year] in accordance with **EN ISO 13849-1: 2006**	**20**

Pilz GmbH & Co. KG, Felix-Wankel-Straße 2, 73760 Ostfildern, Germany
Telephone: +49 711 3409-0, Telefax: +49 711 3409-133, E-Mail: pilz.gmbh@pilz.de

Up to PL e of EN ISO 13849-1
PNOZ X3P

Times	
Switch-on delay	
with automatic reset typ.	**250 ms** No. 777310, 787310
	330 ms No. 777313, 787313
with automatic reset max.	**450 ms** No. 777313, 787313
	500 ms No. 777310, 787310
with automatic reset after power on typ.	**280 ms** No. 777310, 787310
	750 ms No. 777313, 787313
with automatic reset after power on max.	**1,000 ms** No. 777313, 787313
	550 ms No. 777310, 787310
on monitored reset with rising edge typ.	**35 ms**
on monitored reset with rising edge max.	**50 ms**
Delay-on de-energisation	
with E-STOP typ.	**15 ms** No. 777310, 787310
	25 ms No. 777313, 787313
with E-STOP max.	**30 ms**
with power failure typ.	**50 ms** No. 777310, 787310
with power failure max.	**70 ms** No. 777310, 787310
with power failure typ. U_B AC/DC: **24 V** No. 777313, 787313	**150 ms** No. 777313, 787313
with power failure max. U_B AC/DC: **24 V** No. 777313, 787313	**180 ms** No. 777313, 787313
with power failure typ. U_B AC : **240 V**	**1,500 ms** No. 777313, 787313
with power failure max. U_B AC : **240 V**	**2200 ms** No. 777313, 787313
Recovery time at max. switching frequency 1/s	
after E-STOP	**50 ms**
after power failure	**100 ms** No. 777310, 787310
	200 ms No. 777313, 787313
after power failure on universal power supply	**2250 ms** No. 777313, 787313
Waiting period with a monitored reset	
with rising edge	**200 ms** No. 777313, 787313
	300 ms No. 777310, 787310
Min. start pulse duration with a monitored reset	
with rising edge	**30 ms**
Simultaneity, channel 1 and 2	∞
Supply interruption before de-energisation	**20 ms**
Environmental data	
EMC	**EN 60947-5-1**, **EN 61000-6-2**, **EN 61000-6-3**
Vibration to **EN 60068-2-6**	
Frequency	**10 - 55 Hz**
Amplitude	**0.35 mm**
Climatic suitability	**EN 60068-2-78**
Airgap creepage in accordance with **EN 60947-1**	
Pollution degree	**2**
Overvoltage category	**III / II**
Rated insulation voltage	**250 V**
Rated impulse withstand voltage	**4.00 kV**
Ambient temperature	**-20 - 55 °C**
Storage temperature	**-40 - 85 °C**
Protection type	
Mounting (e.g. cabinet)	**IP54**
Housing	**IP40**
Terminals	**IP20**
Mechanical data	
Housing material	
Housing	**PPO UL 94 V0**
Front	**ABS UL 94 V0**

Up to PL e of EN ISO 13849-1
PNOZ X3P

Mechanical data	
Cross section of external conductors with screw terminals	
1 core flexible	**0.25 - 2.50 mm² , 24 - 12 AWG** No. 777310, 777313
2 core, same cross section, flexible:	
with crimp connectors, without insulating sleeve	**0.25 - 1.00 mm² , 24 - 16 AWG** No. 777310, 777313
without crimp connectors or with TWIN crimp connectors	**0.20 - 1.50 mm² , 24 - 16 AWG** No. 777310, 777313
Torque setting with screw terminals	**0.50 Nm** No. 777310, 777313
Cross section of external conductors with spring-loaded terminals: Flexible with/without crimp connectors	**0.20 - 1.50 mm² , 24 - 16 AWG** No. 787310, 787313
Spring-loaded terminals: Terminal points per connection	**2** No. 787310, 787313
Stripping length	**8 mm** No. 787310, 787313
Dimensions	
Height	**101.0 mm** No. 787310, 787313 **94.0 mm** No. 777310, 777313
Width	**45.0 mm**
Depth	**121.0 mm**
Weight	**265 g** No. 777310 **270 g** No. 787310 **300 g** No. 787313 **306 g** No. 777313

No. stands for order number.

It is essential to consider the relay's service life graphs. The relay outputs' safety-related characteristic data is only valid if the values in the service life graphs are met.

The PFH value depends on the switching frequency and the load on the relay output.
If the service life graphs are not accessible, the stated PFH value can be used irrespective of the switching frequency and the load, as the PFH value already considers the relay's B10d value as well as the failure rates of the other components.

All the units used within a safety function must be considered when calculating the safety characteristic data.

INFORMATION
A safety function's SIL/PL values are **not** identical to the SIL/PL values of the units that are used and may be different. We recommend that you use the PAScal software tool to calculate the safety function's SIL/PL values.

The standards current on **2009-11** apply.

Conventional thermal current while loading several contacts		
Number of contacts	I_{th} per contact at U_B DC	I_{th} at U_B AC
1	**8.00 A**	**8.00 A**
2	**7.00 A** No. 777313, 787313 **8.00 A** No. 777310, 787310	**7.00 A**
3	**6.00 A** No. 777313, 787313 **7.00 A** No. 777310, 787310	**6.00 A**

Pilz GmbH & Co. KG, Felix-Wankel-Straße 2, 73760 Ostfildern, Germany
Telephone: +49 711 3409-0, Telefax: +49 711 3409-133, E-Mail: pilz.gmbh@pilz.de

Up to PL e of EN ISO 13849-1
PNOZ X3P

Order reference

Type	Features	Terminals	Order no.
PNOZ X3P C	24 VAC/DC	Spring-loaded terminals	787 310
PNOZ X3P	24 VAC/DC	Screw terminals	777 310
PNOZ X3P C	24 - 240 VAC/DC	Spring-loaded terminals	787 313
PNOZ X3P	24 - 240 VAC/DC	Screw terminals	777 313

Up to PL e of EN ISO 13849-1
PNOZ X3.10P



Safety relay for monitoring E-STOP pushbuttons, safety gates and light beam devices

Approvals

	PNOZ X3.10P
cULus LISTED	◆
TÜV SÜD	◆
CCC	◆

Unit features

- Positive-guided relay outputs:
  - 3 safety contacts (N/O), instantaneous
  - 1 auxiliary contact (N/C), instantaneous
- 1 semiconductor output
- Connection options for:
  - E-STOP pushbutton
  - Safety gate limit switch
  - Reset button
  - Light barriers
- LED indicator for:
  - Switch status channel 1/2
  - Supply voltage
- Semiconductor output signals:
  - Switch status channel 1/2
- Plug-in connection terminals (either spring-loaded terminal or screw terminal)
- See order reference for unit types

Unit description

The safety relay meets the requirements of EN 60947-5-1, EN 60204-1 and VDE 0113-1 and may be used in applications with

- E-STOP pushbuttons
- Safety gates
- Light beam devices

Safety features

The relay meets the following safety requirements:

- The circuit is redundant with built-in self-monitoring.
- The safety function remains effective in the case of a component failure.
- The correct opening and closing of the safety function relays is tested automatically in each on-off cycle.

Block diagram

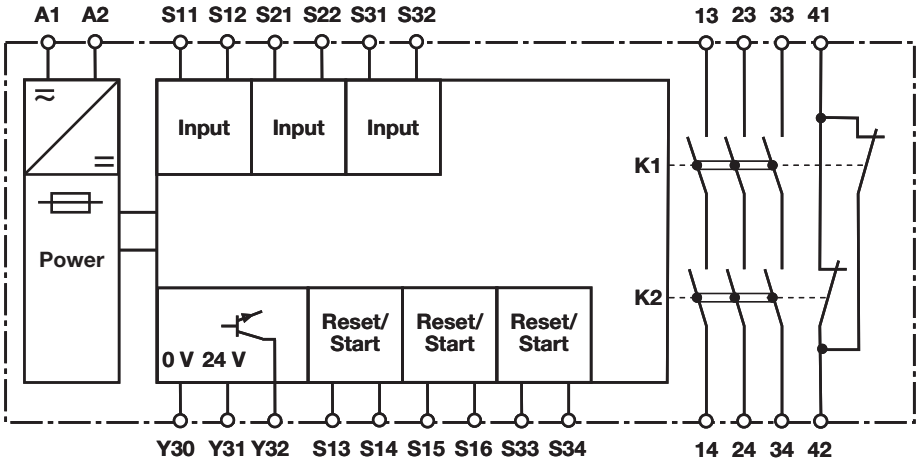

Pilz GmbH & Co. KG, Felix-Wankel-Straße 2, 73760 Ostfildern, Germany
Telephone: +49 711 3409-0, Telefax: +49 711 3409-133, E-Mail: pilz.gmbh@pilz.de

Up to PL e of EN ISO 13849-1
PNOZ X3.10P

Function description

- Single-channel operation: no redundancy in the input circuit, earth faults in the reset and input circuit are detected.
- Dual-channel operation with detection of shorts across contacts: redundant input circuit, detects
  - earth faults in the reset and input circuit,
  - short circuits in the input circuit and, with a monitored reset, in the reset circuit too,
  - shorts between contacts in the input circuit.
- Automatic start: Unit is active once the input circuit has been closed.
- Manual reset: Unit is active once the input circuit is closed and then the reset circuit is closed.
- Monitored reset: Unit is active once the input circuit is closed and once the reset circuit is closed after the waiting period has elapsed (see technical details).
- Increase in the number of available instantaneous safety contacts by connecting contact expansion modules or external contactors.

Timing diagram

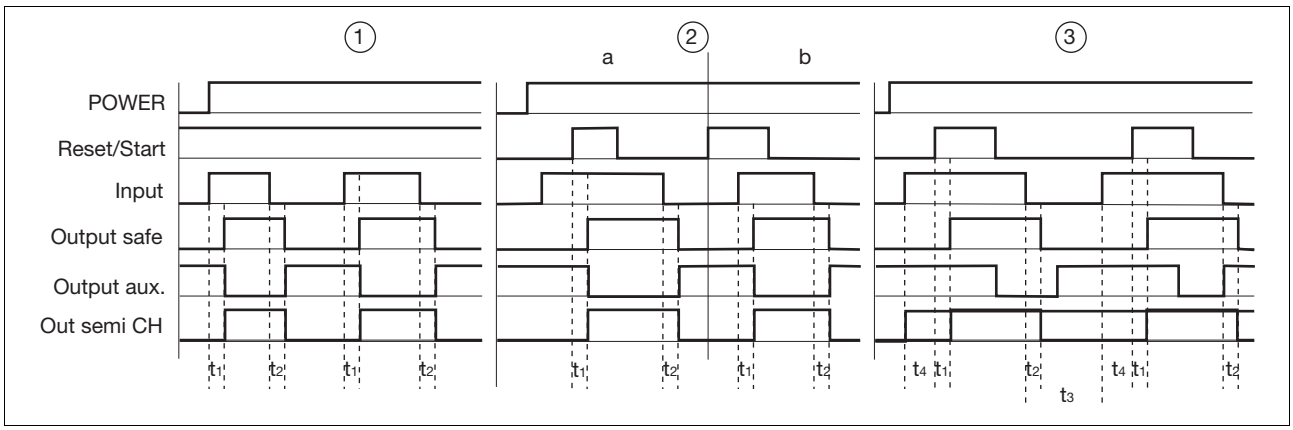

Key

- Power: Supply voltage
- Reset/Start: Reset circuit S13-S14, S33-S34
- Input: Input circuits S11-S12, S21-S22, S31-S32
- Output safe: Safety contacts 13-14, 23-24, 33-34
- Output aux: Auxiliary contacts 41-42
- Out semi CH: Semiconductor output switch status Y32
- ①: Automatic reset
- ②: Manual reset
- ③: Monitored reset
- a: Input circuit closes before reset circuit
- b: Reset circuit closes before input circuit
- t_1: Switch-on delay
- t_2: Delay-on de-energisation
- t_3: Recovery time
- t_4: Waiting period

Wiring

Please note:

- Information given in the “Technical details” must be followed.
- Outputs 13-14, 23-24, 33-34 are safety contacts, output 41-42 is an auxiliary contact (e.g. for display).
- To prevent contact welding, a fuse should be connected before the output contacts (see technical details).
- Calculation of the max. cable runs I_{max} in the input circuit:

$$I_{max} = \frac{R_{lmax}}{R_l / km}$$

R_{lmax} = max. overall cable resistance (see technical details)
R_l /km = cable resistance/km

- Use copper wire that can withstand 60/75 °C.
- Sufficient fuse protection must be provided on all output contacts with capacitive and inductive loads.

Up to PL e of EN ISO 13849-1
PNOZ X3.10P

Preparing for operation

- Supply voltage

Supply voltage	AC	DC
	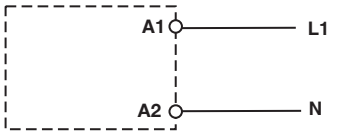	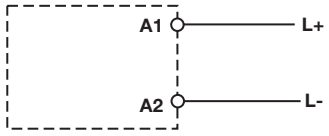

- Input circuit

Input circuit	Single-channel	Dual-channel
E-STOP **without** detection of shorts across contacts	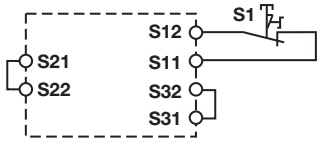	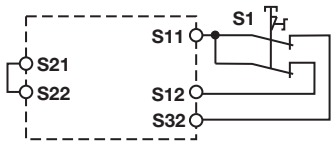
E-STOP **with** detection of shorts across contacts	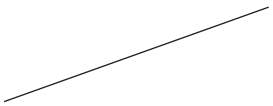	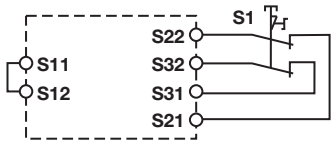
Safety gate **without** detection of shorts across contacts	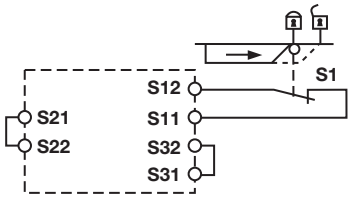	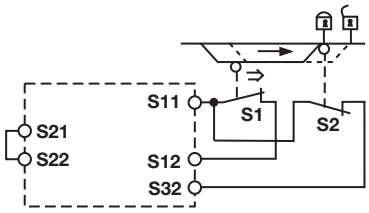
Safety gate **with** detection of shorts across contacts	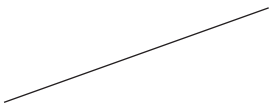	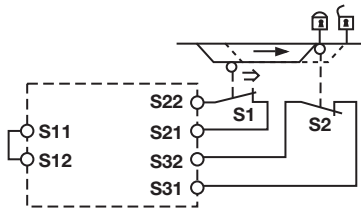
Light beam device **with** detection of shorts across contacts via ESPE	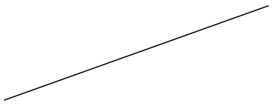	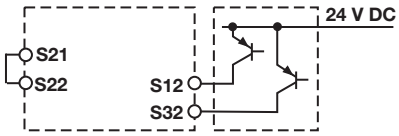

Pilz GmbH & Co. KG, Felix-Wankel-Straße 2, 73760 Ostfildern, Germany
Telephone: +49 711 3409-0, Telefax: +49 711 3409-133, E-Mail: pilz.gmbh@pilz.de

Up to PL e of EN ISO 13849-1
PNOZ X3.10P

▸ Reset circuit

Reset circuit	E-STOP wiring, safety gate	Safety gate (dual-channel)
Automatic reset		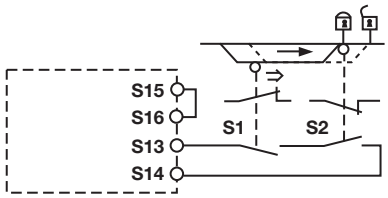
Manual reset	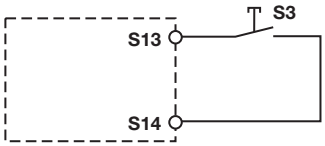	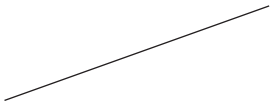
Monitored reset	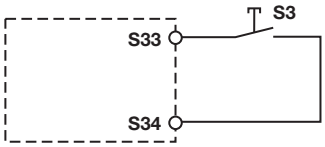	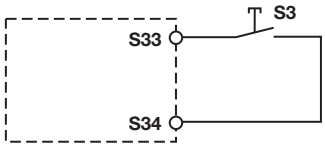

▸ Feedback circuit

Feedback circuit	Automatic reset	Monitored reset
Contacts from external contactors	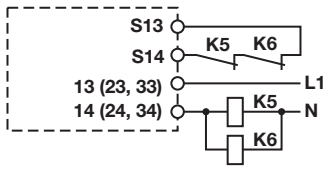	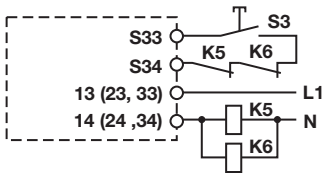

▸ Semiconductor output

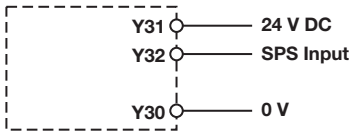

▸ Key

S1/S2	E-STOP/safety gate switch
S3	Reset button
	Switch operated
	Gate open
	Gate closed

Up to PL e of EN ISO 13849-1
PNOZ X3.10P

Terminal configuration

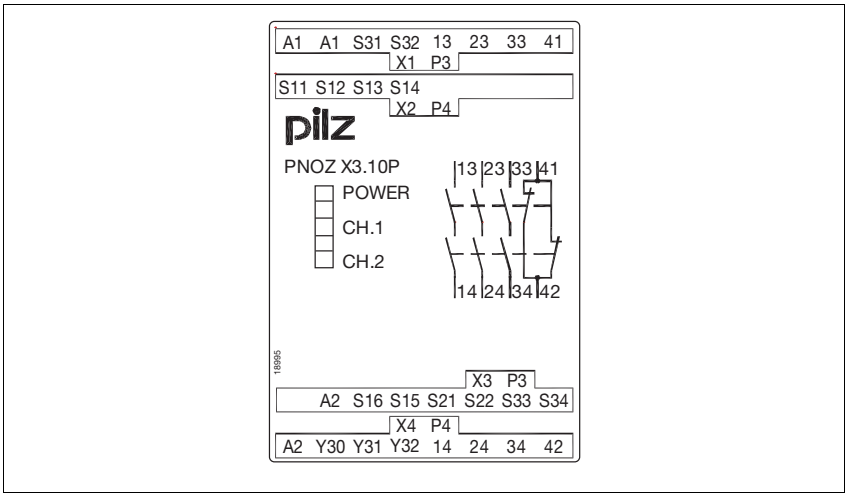

Installation

- The safety relay should be installed in a control cabinet with a protection type of at least IP54.
- Use the notch on the rear of the unit to attach it to a DIN rail.
- Ensure the unit is mounted securely on a vertical DIN rail (35 mm) by using a fixing element (e.g. retaining bracket or an end angle).

Dimensions

* with spring-loaded terminals

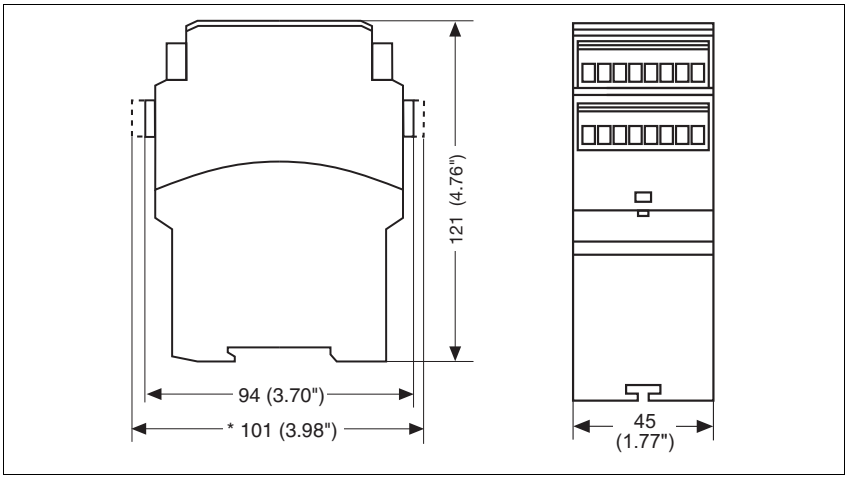

Pilz GmbH & Co. KG, Felix-Wankel-Straße 2, 73760 Ostfildern, Germany
Telephone: +49 711 3409-0, Telefax: +49 711 3409-133, E-Mail: pilz.gmbh@pilz.de

Up to PL e of EN ISO 13849-1
PNOZ X3.10P

Notice

This data sheet is only intended for use during configuration. Please refer to the operating manual for installation and operation.

Service life graph

The service life graphs indicate the number of cycles from which failures due to wear must be expected. The wear is mainly caused by the electrical load; the mechanical load is negligible.

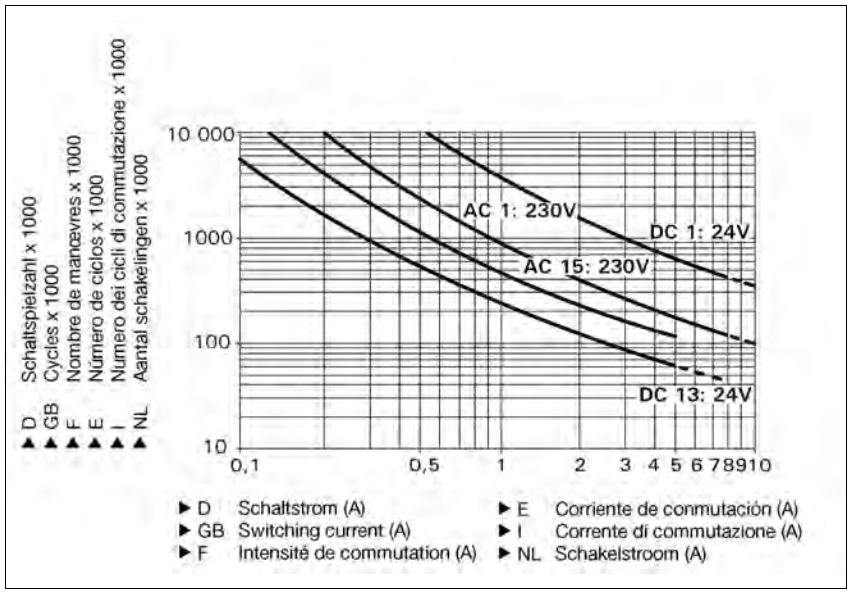

Example

- Inductive load: 0,2 A
- Utilisation category: AC15
- Contact service life: 4,000,000 cycles

Provided the application requires fewer than 4,000,000 cycles, the PFH value (see technical details) can be used in the calculation.

To increase the service life, sufficient spark suppression must be provided on all output contacts. With capacitive loads, any power surges that occur must be noted. With contactors, use freewheel diodes for spark suppression.

Technical details	
Electrical data	
Supply voltage	
Supply voltage U_B AC/DC	**24 V**
Voltage tolerance	**-15 %/+10 %**
Power consumption at U_B AC	**5.0 VA**
Power consumption at U_B DC	**2.5 W**
Frequency range AC	**50 - 60 Hz**
Residual ripple DC	**160 %**
Voltage and current at	
Input circuit DC: **24.0 V**	**40.0 mA**
Reset circuit DC: **24.0 V**	**70.0 mA**
Feedback loop DC: **24.0 V**	**20.0 mA**
Number of output contacts	
Safety contacts (S) instantaneous:	**3**
Auxiliary contacts (N/C):	**1**

Up to PL e of EN ISO 13849-1
PNOZ X3.10P

Electrical data	
Utilisation category in accordance with **EN 60947-4-1**	
Safety contacts: AC1 at **240 V**	I_{min}: **0.01 A** , I_{max}: **8.0 A** P_{max}: **2000 VA**
Safety contacts: DC1 at **24 V**	I_{min}: **0.01 A** , I_{max}: **8.0 A** P_{max}: **200 W**
Auxiliary contacts: AC1 at **240 V**	I_{min}: **0.01 A** , I_{max}: **8.0 A** P_{max}: **2000 VA**
Auxiliary contacts: DC1 at **24 V**	I_{min}: **0.01 A** , I_{max}: **8.0 A** P_{max}: **200 W**
Utilisation category in accordance with **EN 60947-5-1**	
Safety contacts: AC15 at **230 V**	I_{max}: **5.0 A**
Safety contacts: DC13 at **24 V** (6 cycles/min)	I_{max}: **6.0 A**
Auxiliary contacts: AC15 at **230 V**	I_{max}: **5.0 A**
Auxiliary contacts: DC13 at **24 V** (6 cycles/min)	I_{max}: **6.0 A**
Contact material	**AgSnO2 + 0.2 µm Au**
External contact fuse protection (I_K = 1 kA) to **EN 60947-5-1**	
Blow-out fuse, quick	
Safety contacts:	**10 A**
Auxiliary contacts:	**10 A**
Blow-out fuse, slow	
Safety contacts:	**6 A**
Auxiliary contacts:	**6 A**
Circuit breaker 24 VAC/DC, characteristic B/C	
Safety contacts:	**6 A**
Auxiliary contacts:	**6 A**
Semiconductor outputs (short circuit proof)	**24.0 V** DC, **20 mA**
External supply voltage	**24.0 V** DC
Voltage tolerance	**-20 %/+20 %**
Max. overall cable resistance R_{lmax} input circuits, reset circuits	
single-channel at U_B DC	**150 Ohm**
single-channel at U_B AC	**180 Ohm**
dual-channel without detect. of shorts across contacts at U_B DC	**300 Ohm**
dual-channel without detect. of shorts across contacts at U_B AC	**360 Ohm**
dual-channel with detect. of shorts across contacts at U_B DC	**15 Ohm**
dual-channel with detect. of shorts across contacts at U_B AC	**30 Ohm**
Min. input resistance when switching on	**90 Ohm**
Safety-related characteristic data	
PL in accordance with **EN ISO 13849-1: 2006**	**PL e** (**Cat. 4**)
Category in accordance with **EN 954-1**	**Cat. 4**
SIL CL in accordance with **EN IEC 62061**	**SIL CL 3**
PFH in accordance with **EN IEC 62061**	**2.31E-09**
SIL in accordance with **IEC 61511**	**SIL 3**
PFD in accordance with **IEC 61511**	**2.03E-06**
T_M [year] in accordance with **EN ISO 13849-1: 2006**	**20**
Times	
Switch-on delay	
with automatic reset typ.	**250 ms**
with automatic reset max.	**500 ms**
with automatic reset after power on typ.	**280 ms**
with automatic reset after power on max.	**550 ms**
with manual reset typ.	**200 ms**
with manual reset max.	**500 ms**
on monitored reset with rising edge typ.	**35 ms**
on monitored reset with rising edge max.	**50 ms**

Pilz GmbH & Co. KG, Felix-Wankel-Straße 2, 73760 Ostfildern, Germany
Telephone: +49 711 3409-0, Telefax: +49 711 3409-133, E-Mail: pilz.gmbh@pilz.de

Up to PL e of EN ISO 13849-1
PNOZ X3.10P

Times	
Delay-on de-energisation	
with E-STOP typ.	**15 ms**
with E-STOP max.	**30 ms**
with power failure typ.	**180 ms**
with power failure max.	**260 ms**
Recovery time at max. switching frequency 1/s	
after E-STOP	**50 ms**
after power failure	**350 ms**
Waiting period with a monitored reset	
with rising edge	**300 ms**
Min. start pulse duration with a monitored reset	
with rising edge	**30 ms**
Simultaneity, channel 1 and 2	∞
Supply interruption before de-energisation	**150 ms**
Environmental data	
EMC	**EN 60947-5-1**, **EN 61000-6-2**
Vibration to **EN 60068-2-6**	
Frequency	**10 - 55 Hz**
Amplitude	**0.35 mm**
Climatic suitability	**EN 60068-2-78**
Airgap creepage in accordance with **EN 60947-1**	
Pollution degree	**2**
Overvoltage category	**III / II**
Rated insulation voltage	**250 V**
Rated impulse withstand voltage	**4.00 kV**
Ambient temperature	**-20 - 55 °C**
Storage temperature	**-40 - 85 °C**
Protection type	
Mounting (e.g. cabinet)	**IP54**
Housing	**IP40**
Terminals	**IP20**
Mechanical data	
Housing material	
Housing	**PPO UL 94 V0**
Front	**ABS UL 94 V0**
Cross section of external conductors with screw terminals	
1 core flexible	**0.25 - 2.50 mm² , 24 - 12 AWG** No. 777314
2 core, same cross section, flexible:	
with crimp connectors, without insulating sleeve	**0.25 - 1.00 mm² , 24 - 16 AWG** No. 777314
without crimp connectors or with TWIN crimp connectors	**0.20 - 1.50 mm² , 24 - 16 AWG** No. 777314
Torque setting with screw terminals	**0.50 Nm** No. 777314
Cross section of external conductors with spring-loaded terminals: Flexible with/without crimp connectors	**0.20 - 1.50 mm² , 24 - 16 AWG** No. 787314
Spring-loaded terminals: Terminal points per connection	**2** No. 787314
Stripping length	**8 mm** No. 787314
Dimensions	
Height	**101.0 mm** No. 787314 **94.0 mm** No. 777314
Width	**45.0 mm**
Depth	**121.0 mm**
Weight	**283 g** No. 787314 **290 g** No. 777314

No. stands for order number.

Up to PL e of EN ISO 13849-1
PNOZ X3.10P

It is essential to consider the relay's service life graphs. The relay outputs' safety-related characteristic data is only valid if the values in the service life graphs are met.

The PFH value depends on the switching frequency and the load on the relay output.
If the service life graphs are not accessible, the stated PFH value can be used irrespective of the switching frequency and the load, as the PFH value already considers the relay's B10d value as well as the failure rates of the other components.

All the units used within a safety function must be considered when calculating the safety characteristic data.

INFORMATION
A safety function's SIL/PL values are **not** identical to the SIL/PL values of the units that are used and may be different. We recommend that you use the PAScal software tool to calculate the safety function's SIL/PL values.

The standards current on **2009-11** apply.

Conventional thermal current while loading several contacts

Number of contacts	I_{th} per contact at U_B DC	I_{th} at U_B AC
1	**8.00 A**	**8.00 A**
2	**8.00 A**	**7.00 A**
3	**7.00 A**	**6.00 A**

Order reference

Type	Features	Terminals	Order no.
PNOZ X3.10P C	24 VAC/DC	Spring-loaded terminals	787 314
PNOZ X3.10P	24 VAC/DC	Screw terminals	777 314

Pilz GmbH & Co. KG, Felix-Wankel-Straße 2, 73760 Ostfildern, Germany
Telephone: +49 711 3409-0, Telefax: +49 711 3409-133, E-Mail: pilz.gmbh@pilz.de

Up to PL e of EN ISO 13849-1
PNOZ X7P



Safety relay for monitoring E-STOP pushbuttons and safety gates.

Approvals

	PNOZ X7P
c UL us LISTED	◆
TÜV SÜD	◆
CCC	◆

Unit features

- Positive-guided relay outputs:
  - 2 safety contacts (N/O), instantaneous
- Connection options for:
  - E-STOP pushbutton
  - Reset button
- LED indicator for:
  - Switch status channel 1/2
  - Supply voltage
- Plug-in connection terminals (either spring-loaded terminal or screw terminal)

Unit description

The safety relay meets the requirements of EN 60947-5-1, EN 60204-1 and VDE 0113-1 and may be used in applications with
- E-STOP pushbuttons
- Safety gates

Safety features

The relay meets the following safety requirements:
- The circuit is redundant with built-in self-monitoring.
- The safety function remains effective in the case of a component failure.
- The correct opening and closing of the safety function relays is tested automatically in each on-off cycle.

Block diagram

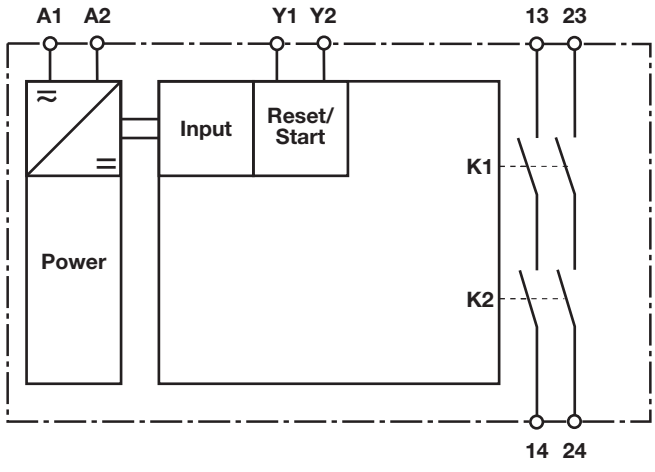

Up to PL e of EN ISO 13849-1
PNOZ X7P

Function description

- Single-channel operation: no redundancy in the input circuit, earth faults in the reset and input circuit are detected.
- Automatic start: Unit is active once the input circuit has been closed.
- Manual reset: Unit is active once the input circuit is closed and then the reset circuit is closed.
- Increase in the number of available instantaneous safety contacts by connecting contact expansion modules or external contactors.

Timing diagram

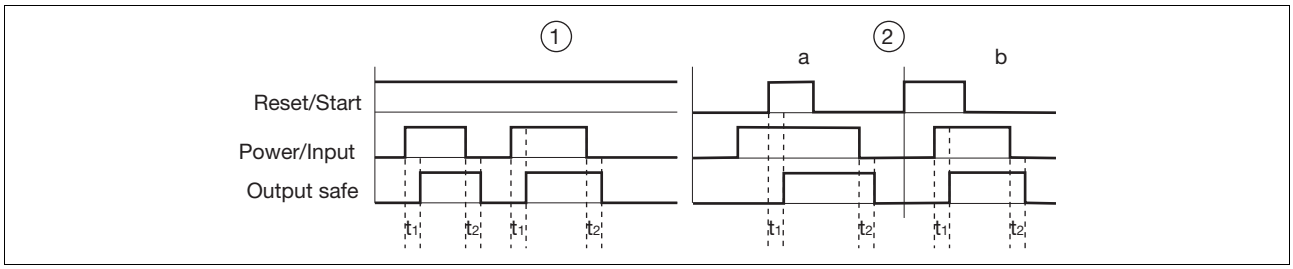

Key

- Power: Supply voltage
- Reset/start: Reset circuit Y1-Y2
- Input: Input circuits A1
- Output safe: Safety contacts 13-14, 23-24
- ①: Automatic reset
- ②: Manual reset
- a: Input circuit closes before reset circuit
- b: Reset circuit closes before input circuit
- t_1: Switch-on delay
- t_2: Delay-on de-energisation

Wiring

PNOZ X7 AC: The cable runs depend on the cable capacitance.

- Loop circuit, 1 phase: max. l_r = 1 km
- Stub circuit: Cable capacitance C_L and therefore the cable runs l_s are dependent on the supply voltage U_B

Cable capacitance C_L depends on the supply voltage U_B

U_B [V]	24	110	120	230	240
C_L [nF]	37.5	37.5	37.5	7.5	7.5

Cable runs	Loop circuit	Stub circuit
	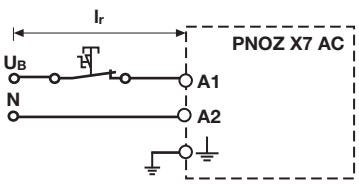	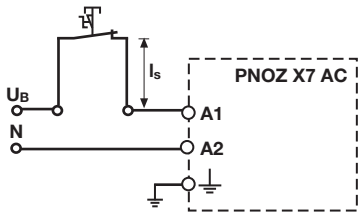

Pilz GmbH & Co. KG, Felix-Wankel-Straße 2, 73760 Ostfildern, Germany
Telephone: +49 711 3409-0, Telefax: +49 711 3409-133, E-Mail: pilz.gmbh@pilz.de

Up to PL e of EN ISO 13849-1
PNOZ X7P

Please note:
- Information given in the “Technical details” must be followed.
- Outputs 13-14, 23-24 are safety contacts.
- To prevent contact welding, a fuse should be connected before the output contacts (see technical details).
- Calculation of the max. cable runs l_{max} in the input circuit:

$$l_{max} = \frac{R_{lmax}}{R_l / km}$$

R_{lmax} = max. overall cable resistance (see technical details)
R_l /km = cable resistance/km

- Use copper wire that can withstand 60/75 °C.
- Sufficient fuse protection must be provided on all output contacts with capacitive and inductive loads.

Up to PL e of EN ISO 13849-1
PNOZ X7P

Preparing for operation

- Supply voltage

Supply voltage	AC	DC
	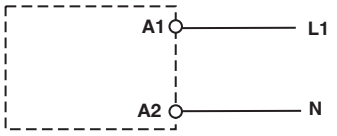	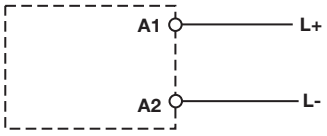

- Input circuit

Input circuit	Single-channel	Dual-channel
E-STOP **without** detection of shorts across contacts	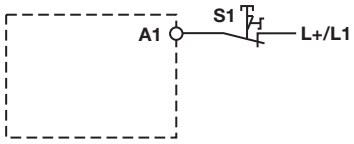	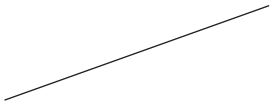
Safety gate **without** detection of shorts across contacts	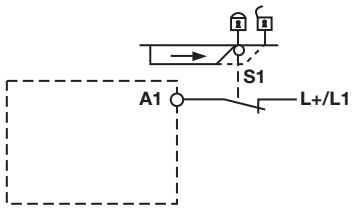	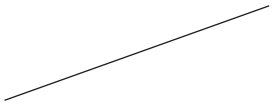

- Reset circuit

Reset circuit	E-STOP wiring (single-channel)	E-STOP wiring (dual-channel)
Automatic reset		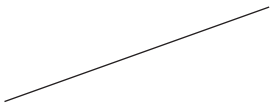
Manual reset	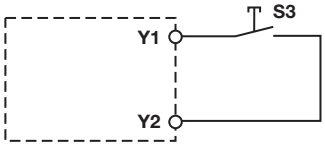	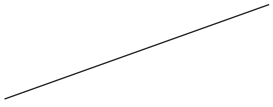

Pilz GmbH & Co. KG, Felix-Wankel-Straße 2, 73760 Ostfildern, Germany
Telephone: +49 711 3409-0, Telefax: +49 711 3409-133, E-Mail: pilz.gmbh@pilz.de

Up to PL e of EN ISO 13849-1
PNOZ X7P

▸ Feedback circuit

Feedback circuit	Automatic reset	Monitored reset
Contacts from external contactors	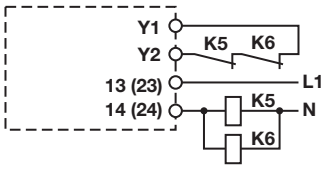	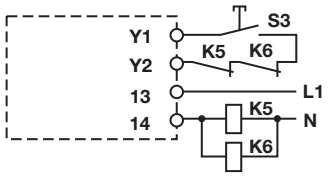

▸ Key

S1	E-STOP pushbutton
S3	Reset button
	Switch operated
	Gate open
	Gate closed

Up to PL e of EN ISO 13849-1
PNOZ X7P

Terminal configuration

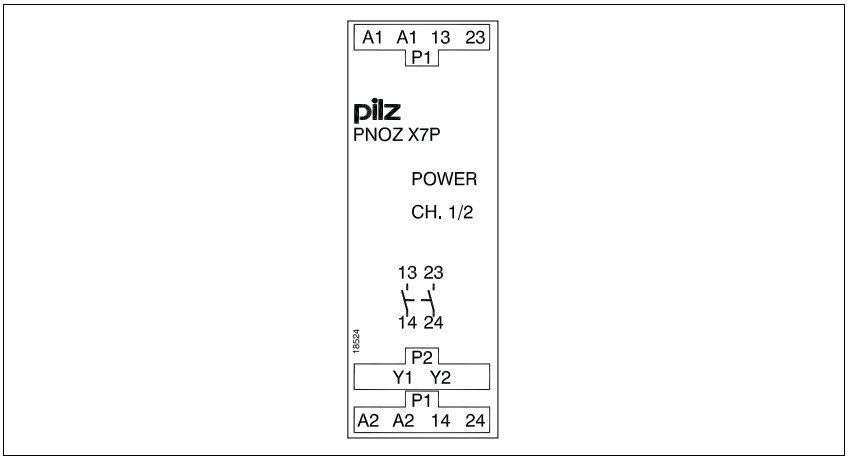

Installation

- The safety relay should be installed in a control cabinet with a protection type of at least IP54.
- Use the notch on the rear of the unit to attach it to a DIN rail.
- Ensure the unit is mounted securely on a vertical DIN rail (35 mm) by using a fixing element (e.g. retaining bracket or an end angle).

Dimensions

* with spring-loaded terminals

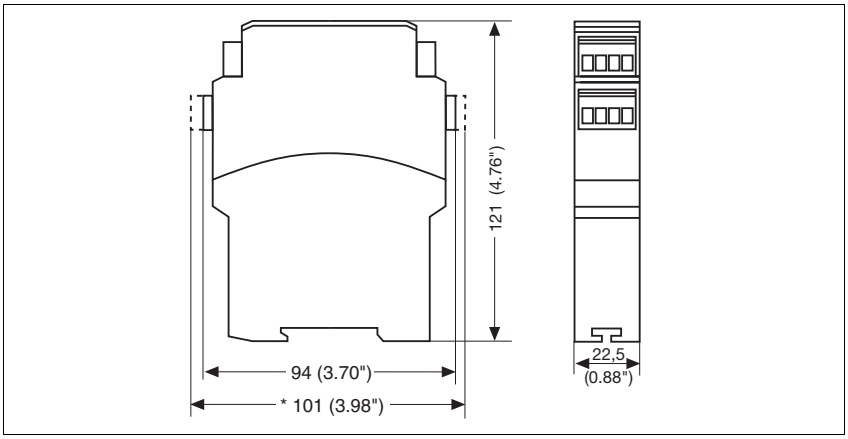

Pilz GmbH & Co. KG, Felix-Wankel-Straße 2, 73760 Ostfildern, Germany
Telephone: +49 711 3409-0, Telefax: +49 711 3409-133, E-Mail: pilz.gmbh@pilz.de

Up to PL e of EN ISO 13849-1
PNOZ X7P

Notice

This data sheet is only intended for use during configuration. Please refer to the operating manual for installation and operation.

Service life graph

The service life graphs indicate the number of cycles from which failures due to wear must be expected. The wear is mainly caused by the electrical load; the mechanical load is negligible.

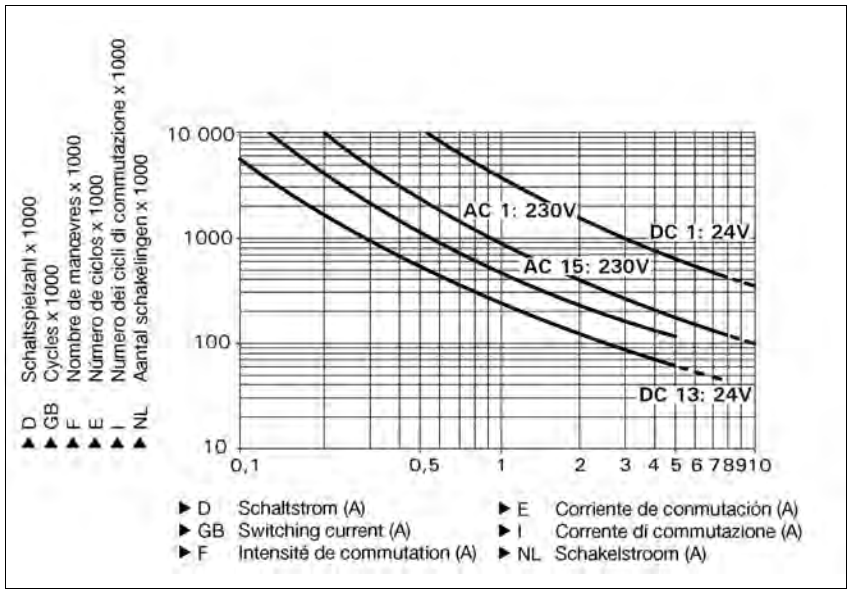

Example
- Inductive load: 0,2 A
- Utilisation category: AC15
- Contact service life: 4,000,000 cycles

Provided the application requires fewer than 4,000,000 cycles, the PFH value (see technical details) can be used in the calculation.

To increase the service life, sufficient spark suppression must be provided on all output contacts. With capacitive loads, any power surges that occur must be noted. With contactors, use freewheel diodes for spark suppression.

Technical details

Electrical data	
Supply voltage	
Supply voltage U_B AC	**110 - 120 V**, **230 - 240 V**
Supply voltage U_B AC/DC	**24 V**
Voltage tolerance	**-15 %/+10 %**
Power consumption at U_B AC	**2.0 VA** No. 777053, 777056, 787053, 787056 **3.0 VA** No. 777059, 787059
Power consumption at U_B DC	**1.5 W** No. 777059, 787059
Frequency range AC	**50 - 60 Hz**
Residual ripple DC	**160 %**

Pilz GmbH & Co. KG, Felix-Wankel-Straße 2, 73760 Ostfildern, Germany
Telephone: +49 711 3409-0, Telefax: +49 711 3409-133, E-Mail: pilz.gmbh@pilz.de

Up to PL e of EN ISO 13849-1
PNOZ X7P

Electrical data	
Voltage and current at	
Input circuit DC: **110.0 - 120.0 V** No. 777053, 787053	**17.0 mA** No. 777053, 787053
230.0 - 240.0 V No. 777056, 787056	**50.0 mA** No. 777059, 787059
24.0 V No. 777059, 787059	**8.0 mA** No. 777056, 787056
Reset circuit DC: **24.0 V**	**210.0 mA** No. 777059, 787059
	40.0 mA No. 777053, 777056, 787053, 787056
Feedback loop DC: **24.0 V**	**210.0 mA** No. 777059, 787059
	40.0 mA No. 777053, 777056, 787053, 787056
Number of output contacts	
Safety contacts (S) instantaneous:	**2**
Utilisation category in accordance with **EN 60947-4-1**	
Safety contacts: AC1 at **240 V**	I_{min}: **0.01 A** , I_{max}: **4.0 A** No. 777053, 777056, 787053, 787056
	6.0 A No. 777059, 787059
	P_{max}: **1000 VA** No. 777053, 777056, 787053, 787056
	1500 VA No. 777059, 787059
Safety contacts: DC1 at **24 V**	I_{min}: **0.01 A** , I_{max}: **4.0 A** No. 777053, 777056, 787053, 787056
	6.0 A No. 777059, 787059
	P_{max}: **100 W** No. 777053, 777056, 787053, 787056
	150 W No. 777059, 787059
Utilisation category in accordance with **EN 60947-5-1**	
Safety contacts: AC15 at **230 V**	I_{max}: **4.0 A** No. 777053, 777056, 787053, 787056
	5.0 A No. 777059, 787059
Safety contacts: DC13 at **24 V** (6 cycles/min)	I_{max}: **4.0 A** No. 777053, 777056, 787053, 787056
	6.0 A No. 777059, 787059
Contact material	**AgSnO2 + 0.2 µm Au**
External contact fuse protection (I_K = 1 kA) to **EN 60947-5-1**	
Blow-out fuse, quick	
Safety contacts:	**4 A** No. 777053, 777056, 787053, 787056
	6 A No. 777059, 787059
Blow-out fuse, slow	
Safety contacts:	**4 A**
Circuit breaker 24 VAC/DC, characteristic B/C	
Safety contacts:	**4 A**
Max. overall cable resistance R_{lmax} input circuits, reset circuits	
single-channel at U_B DC	**15 Ohm** No. 777059, 787059
single-channel at U_B AC	**15 Ohm** No. 777059, 787059
Safety-related characteristic data	
PL in accordance with **EN ISO 13849-1: 2006**	**PL e** (**Cat. 4**)
Category in accordance with **EN 954-1**	**Cat. 4**
SIL CL in accordance with **EN IEC 62061**	**SIL CL 3**
PFH in accordance with **EN IEC 62061**	**2.31E-09**
SIL in accordance with **IEC 61511**	**SIL 3**
PFD in accordance with **IEC 61511**	**2.03E-06**
T_M [year] in accordance with **EN ISO 13849-1: 2006**	**20**
Times	
Switch-on delay	
with automatic reset typ.	**230 ms** No. 777053, 777056, 787053, 787056
	50 ms No. 777059, 787059
with automatic reset max.	**150 ms** No. 777059, 787059
	700 ms No. 777053, 777056, 787053, 787056
with automatic reset after power on typ.	**230 ms** No. 777053, 777056, 787053, 787056
	50 ms No. 777059, 787059
with automatic reset after power on max.	**150 ms** No. 777059, 787059
	700 ms No. 777053, 777056, 787053, 787056
with manual reset typ.	**140 ms** No. 777053, 777056, 787053, 787056
	35 ms No. 777059, 787059
with manual reset max.	**150 ms** No. 777059, 787059
	700 ms No. 777053, 777056, 787053, 787056

Pilz GmbH & Co. KG, Felix-Wankel-Straße 2, 73760 Ostfildern, Germany
Telephone: +49 711 3409-0, Telefax: +49 711 3409-133, E-Mail: pilz.gmbh@pilz.de

Up to PL e of EN ISO 13849-1
PNOZ X7P

Times	
Delay-on de-energisation	
with E-STOP typ.	**45 ms** No. 777059, 787059 **70 ms** No. 777053, 777056, 787053, 787056
with E-STOP max.	**100 ms** No. 777053, 777056, 787053, 787056 **70 ms** No. 777059, 787059
with power failure typ.	**45 ms** No. 777059, 787059 **70 ms** No. 777053, 777056, 787053, 787056
with power failure max.	**100 ms** No. 777053, 777056, 787053, 787056 **70 ms** No. 777059, 787059
Recovery time at max. switching frequency 1/s	
after E-STOP	**120 ms** No. 777053, 777056, 787053, 787056 **50 ms** No. 777059, 787059
after power failure	**120 ms** No. 777053, 777056, 787053, 787056 **150 ms** No. 777059, 787059
Supply interruption before de-energisation	**20 ms**
Environmental data	
EMC	**EN 60947-5-1**, **EN 61000-6-2**
Vibration to **EN 60068-2-6**	
Frequency	**10 - 55 Hz**
Amplitude	**0.35 mm**
Climatic suitability	**EN 60068-2-78**
Airgap creepage in accordance with **EN 60947-1**	
Pollution degree	**2**
Overvoltage category	**III**
Rated insulation voltage	**250 V**
Rated impulse withstand voltage	**4.00 kV**
Ambient temperature	**-10 - 55 °C**
Storage temperature	**-40 - 85 °C**
Protection type	
Mounting (e.g. cabinet)	**IP54**
Housing	**IP40**
Terminals	**IP20**
Mechanical data	
Housing material	
Housing	**PPO UL 94 V0**
Front	**ABS UL 94 V0**
Cross section of external conductors with screw terminals	
1 core flexible	**0.25 - 2.50 mm² , 24 - 12 AWG** No. 777053, 777056, 777059
2 core, same cross section, flexible:	
with crimp connectors, without insulating sleeve	**0.25 - 1.00 mm² , 24 - 16 AWG** No. 777053, 777056, 777059
without crimp connectors or with TWIN crimp connectors	**0.20 - 1.50 mm² , 24 - 16 AWG** No. 777053, 777056, 777059
Torque setting with screw terminals	**0.50 Nm** No. 777053, 777056, 777059
Cross section of external conductors with spring-loaded terminals: Flexible with/without crimp connectors	**0.20 - 1.50 mm² , 24 - 16 AWG** No. 787053, 787056, 787059
Spring-loaded terminals: Terminal points per connection	**2** No. 787053, 787056, 787059
Stripping length	**8 mm** No. 787053, 787056, 787059
Dimensions	
Height	**101.0 mm** No. 787053, 787056, 787059 **94.0 mm** No. 777053, 777056, 777059
Width	**22.5 mm**
Depth	**121.0 mm**
Weight	**185 g** No. 787059 **190 g** No. 777059 **225 g** No. 787053, 787056 **230 g** No. 777053, 777056

No. stands for order number.

Pilz GmbH & Co. KG, Felix-Wankel-Straße 2, 73760 Ostfildern, Germany
Telephone: +49 711 3409-0, Telefax: +49 711 3409-133, E-Mail: pilz.gmbh@pilz.de

Up to PL e of EN ISO 13849-1
PNOZ X7P

It is essential to consider the relay's service life graphs. The relay outputs' safety-related characteristic data is only valid if the values in the service life graphs are met.

The PFH value depends on the switching frequency and the load on the relay output.
If the service life graphs are not accessible, the stated PFH value can be used irrespective of the switching frequency and the load, as the PFH value already considers the relay's B10d value as well as the failure rates of the other components.

All the units used within a safety function must be considered when calculating the safety characteristic data.

INFORMATION
A safety function's SIL/PL values are **not** identical to the SIL/PL values of the units that are used and may be different. We recommend that you use the PAScal software tool to calculate the safety function's SIL/PL values.

The standards current on **2004-09** apply.

Conventional thermal current

Number of contacts	I_{th} (A) at U_B AC/DC	I_{th} (A) at U_BAC
1	**4 A** Order no.: 777059, 787059	**4 A** Order no.: 777053, 777056, 787053, 787056
2	**4 A** Order no.: 777059, 787059	**3 A** Order no.: 777053, 777056, 787053, 787056

Order reference

Type	Features	Terminals	Order no.
PNOZ X7P C	24 VAC/DC	Spring-loaded terminals	787 059
PNOZ X7P	24 VAC/DC	Screw terminals	777 059
PNOZ X7P C	110 - 120 VAC	Spring-loaded terminals	787 053
PNOZ X7P	110 - 120 VAC	Screw terminals	777 053
PNOZ X7P C	230 - 240 VAC	Spring-loaded terminals	787 056
PNOZ X7P	230 - 240 VAC	Screw terminals	777 056

Pilz GmbH & Co. KG, Felix-Wankel-Straße 2, 73760 Ostfildern, Germany
Telephone: +49 711 3409-0, Telefax: +49 711 3409-133, E-Mail: pilz.gmbh@pilz.de

Up to PL e of EN ISO 13849-1
PNOZ X8P



Safety relay for monitoring E-STOP pushbuttons and safety gates.

Approvals

	PNOZ X8P
c UL us LISTED	◆
TÜV SÜD	◆
CCC	◆

Unit features

- Positive-guided relay outputs:
  - 3 safety contacts (N/O), instantaneous
  - 2 auxiliary contacts (N/C), instantaneous
- 2 semiconductor outputs
- Connection options for:
  - E-STOP pushbutton
  - Safety gate limit switch
  - Reset button
  - Light barriers
- LED indicator for:
  - Switch status channel 1/2
  - Supply voltage
- Semiconductor outputs signal:
  - Switch status channel 1/2
  - Supply voltage is present
- Plug-in connection terminals (either spring-loaded terminal or screw terminal)
- See order reference for unit types

Unit description

The safety relay meets the requirements of EN 60947-5-1, EN 60204-1 and VDE 0113-1 and may be used in applications with

- E-STOP pushbuttons
- Safety gates
- Light beam devices

Safety features

The relay meets the following safety requirements:

- The circuit is redundant with built-in self-monitoring.
- The safety function remains effective in the case of a component failure.
- The correct opening and closing of the safety function relays is tested automatically in each on-off cycle.
- The tranformer is short circuit-proof. An electronic fuse is used on a DC supply.

Block diagram

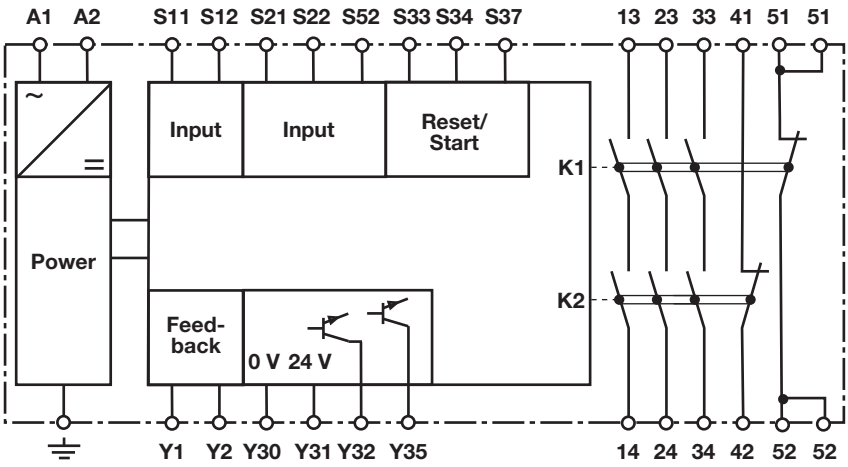

Pilz GmbH & Co. KG, Felix-Wankel-Straße 2, 73760 Ostfildern, Germany
Telephone: +49 711 3409-0, Telefax: +49 711 3409-133, E-Mail: pilz.gmbh@pilz.de

Up to PL e of EN ISO 13849-1
PNOZ X8P

Function description

- Single-channel operation: no redundancy in the input circuit, earth faults in the reset and input circuit are detected.
- Dual-channel operation without detection of shorts across contacts: redundant input circuit, detects
  – earth faults in the reset and input circuit,
  – short circuits in the input circuit and, with a monitored reset, in the reset circuit too.
- Dual-channel operation with detection of shorts across contacts: redundant input circuit, detects
  – earth faults in the reset and input circuit,
  – short circuits in the input circuit and, with a monitored reset, in the reset circuit too,
  – shorts between contacts in the input circuit.
- Automatic start: Unit is active once the input circuit has been closed.
- Manual reset: Unit is active once the input circuit is closed and then the reset circuit is closed.
- Monitored reset: Unit is active once
  – the input circuit is closed and then the reset circuit is closed and opened again.
  – the reset circuit is closed and then opened again once the input circuit is closed.
- Increase in the number of available instantaneous safety contacts by connecting contact expansion modules or external contactors.

Timing diagram

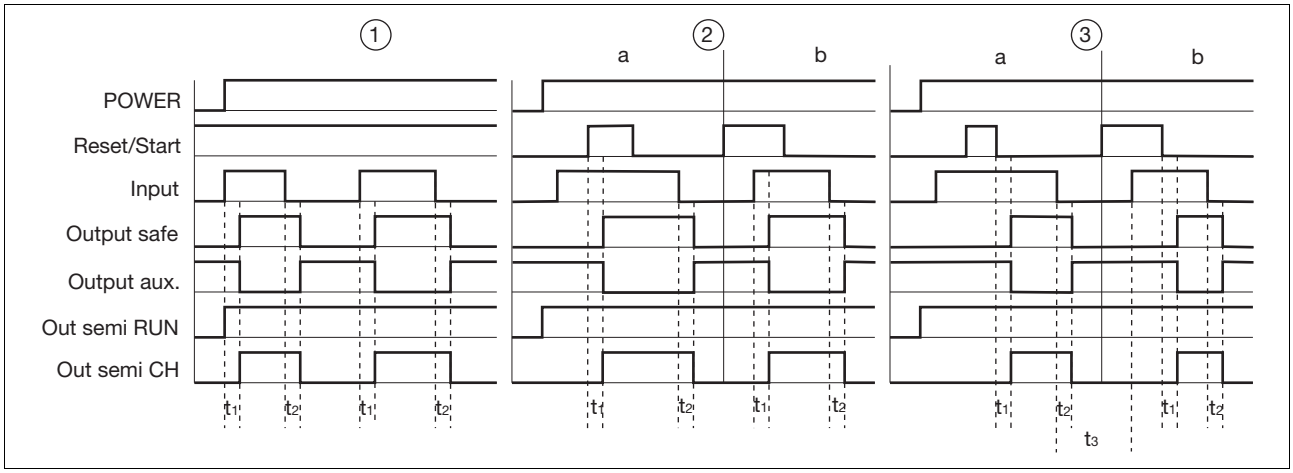

Key

- Power: Supply voltage
- Reset/Start: Reset circuit S33-S34, Y1-S37
- Input: Input circuits S21-22, S11-S12, S52
- Output safe: Safety contacts 13-14, 23-24, 33-34
- Output aux: Auxiliary contacts 41-42, 51-52
- Out semi RUN: Semiconductor output supply voltage Y35
- Out semi CH: Semiconductor output switch status Y32
- ①: Automatic reset
- ②: Manual reset
- ③: Monitored reset
- a: Input circuit closes before reset circuit
- b: Reset circuit closes before input circuit
- t_1: Switch-on delay
- t_2: Delay-on de-energisation
- t_3: Recovery time

Wiring

Please note:

- Information given in the “Technical details” must be followed.
- Outputs 13-14, 23-24, 33-34 are safety contacts, outputs 41-42, 51-52 are auxiliary contacts (e.g. for display).
- To prevent contact welding, a fuse should be connected before the output contacts (see technical details).
- Calculation of the max. cabling runs I_{max} in the input circuit:

$$I_{max} = \frac{R_{lmax}}{R_l / km}$$

R_{lmax} = max. overall cable resistance (see technical details)
R_l /km = cable resistance/km

- Use copper wire that can withstand 60/75 °C.
- Sufficient fuse protection must be provided on all output contacts with capacitive and inductive loads.

Pilz GmbH & Co. KG, Felix-Wankel-Straße 2, 73760 Ostfildern, Germany
Telephone: +49 711 3409-0, Telefax: +49 711 3409-133, E-Mail: pilz.gmbh@pilz.de
1002008-EN-03-2011-11

Up to PL e of EN ISO 13849-1
PNOZ X8P

Preparing for operation

- Supply voltage

Supply voltage	AC	DC
	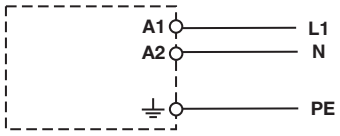	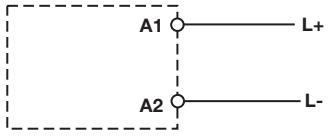

- Input circuit

Input circuit	Single-channel	Dual-channel
E-STOP **without** detection of shorts across contacts	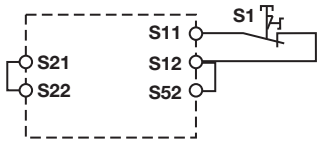	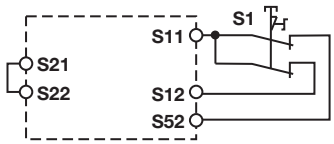
E-STOP **with** detection of shorts across contacts	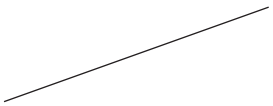	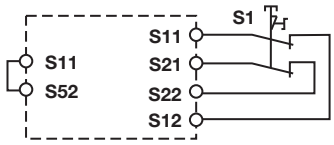
Safety gate **without** detection of shorts across contacts	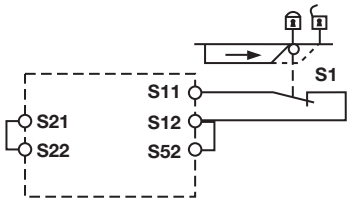	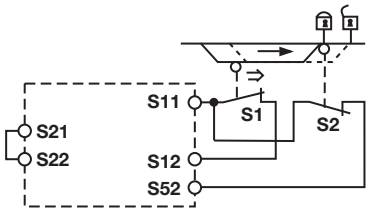
Safety gate **with** detection of shorts across contacts	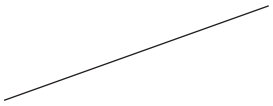	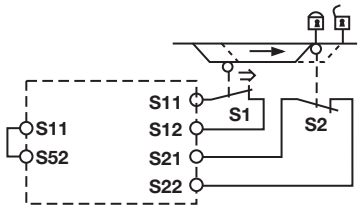
Light beam device **with** detection of shorts across contacts via ESPE	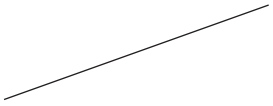	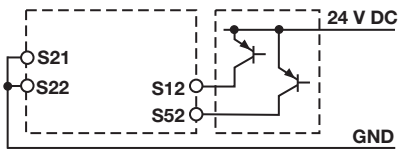

Up to PL e of EN ISO 13849-1
PNOZ X8P

▸ Reset circuit

Reset circuit	E-STOP/safety gate wiring (single-channel and dual-channel without shorts across contacts)	E-STOP/safety gate wiring (dual-channel with shorts across contacts)
Automatic reset		
Manual reset	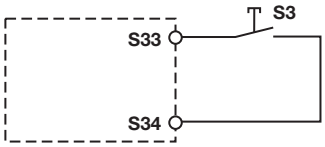	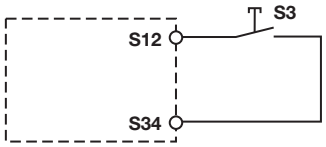
Monitored reset	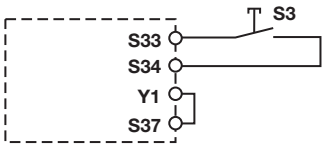	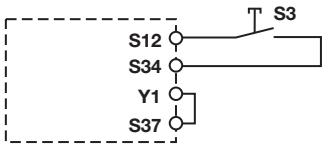

▸ Feedback circuit

Feedback circuit	Automatic reset	Monitored reset
Contacts from external contactors	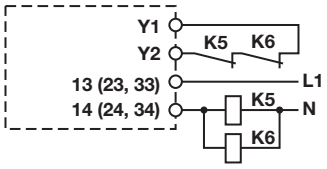	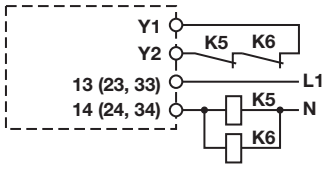

▸ Semiconductor output

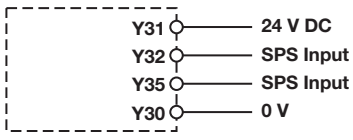

▸ Key

S1	E-STOP pushbutton
S3	Reset button
	Switch operated
	Gate open
	Gate closed

Pilz GmbH & Co. KG, Felix-Wankel-Straße 2, 73760 Ostfildern, Germany
Telephone: +49 711 3409-0, Telefax: +49 711 3409-133, E-Mail: pilz.gmbh@pilz.de

Up to PL e of EN ISO 13849-1
PNOZ X8P

Terminal configuration

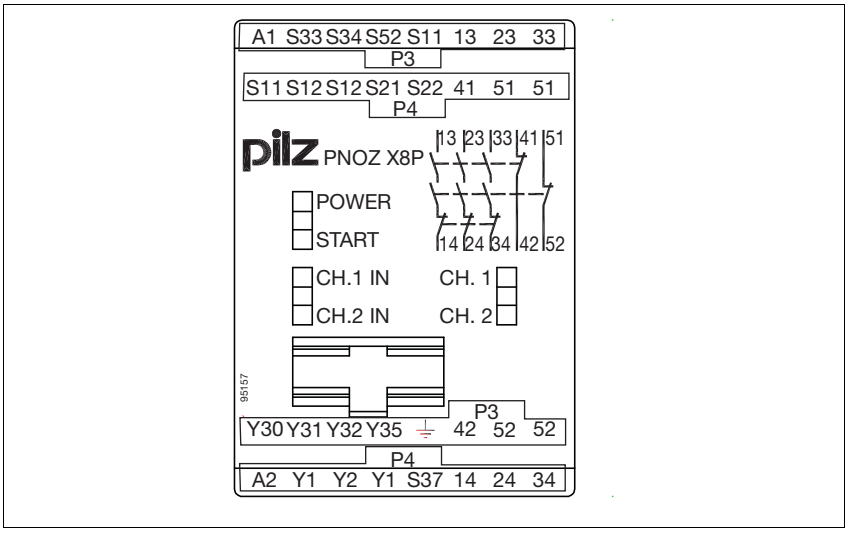

Installation

- The safety relay should be installed in a control cabinet with a protection type of at least IP54.
- Use the notch on the rear of the unit to attach it to a DIN rail.
- Ensure the unit is mounted securely on a vertical DIN rail (35 mm) by using a fixing element (e.g. retaining bracket or an end angle).

Dimensions

* with spring-loaded terminals

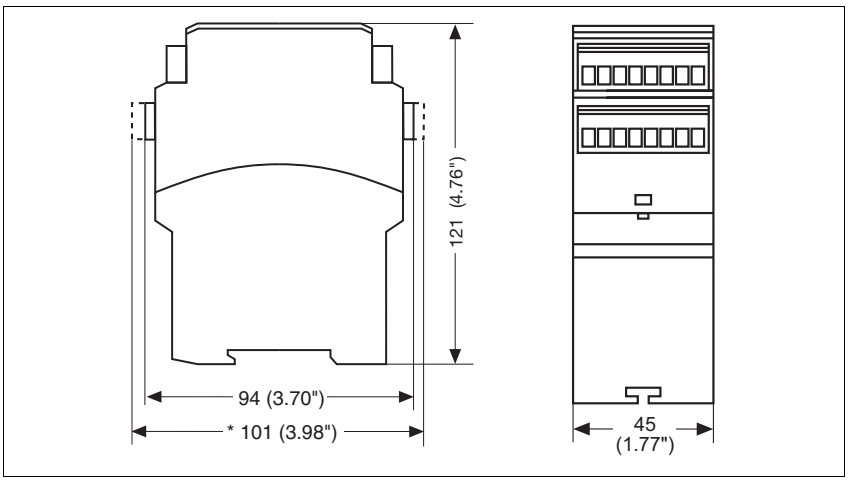

Up to PL e of EN ISO 13849-1
PNOZ X8P

Notice

This data sheet is only intended for use during configuration. Please refer to the operating manual for installation and operation.

Service life graph

The service life graphs indicate the number of cycles from which failures due to wear must be expected. The wear is mainly caused by the electrical load; the mechanical load is negligible.

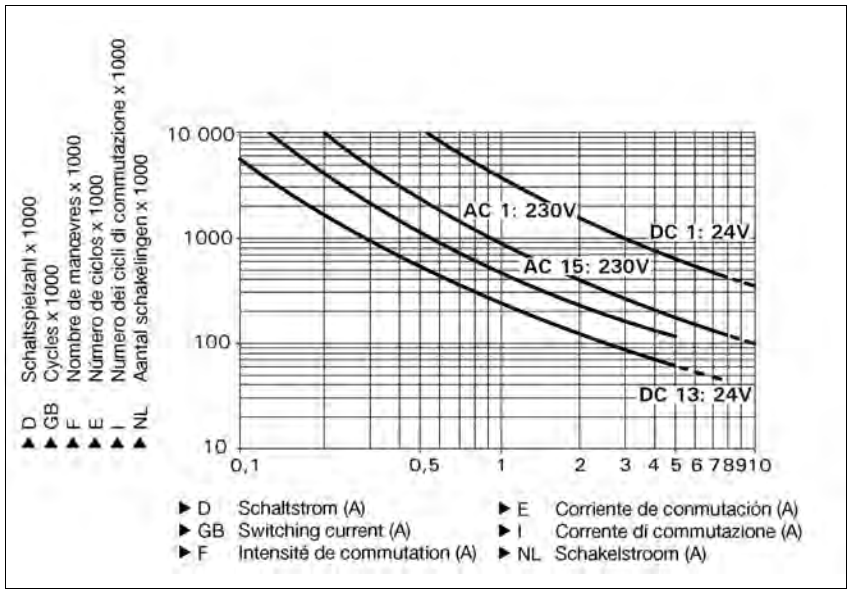

Example
- Inductive load: 0,2 A
- Utilisation category: AC15
- Contact service life: 4,000,000 cycles

Provided the application requires fewer than 4,000,000 cycles, the PFH value (see technical details) can be used in the calculation.

To increase the service life, sufficient spark suppression must be provided on all output contacts. With capacitive loads, any power surges that occur must be noted. With contactors, use freewheel diodes for spark suppression.

Technical details

Electrical data	
Supply voltage	
Supply voltage U_B AC	**24 V**, **110 V**, **115 V**, **120 V**, **230 V**
Supply voltage U_B DC	**24 V**
Voltage tolerance	**-15 %/+10 %**
Power consumption at U_B AC	**6.5 VA** No. 777764, 777765, 777766, 777768, 777770, 787764, 787765, 787766, 787768, 787770
Power consumption at U_B DC	**2.5 W** No. 777760, 787760
Frequency range AC	**50 - 60 Hz**
Residual ripple DC	**160 %**

Pilz GmbH & Co. KG, Felix-Wankel-Straße 2, 73760 Ostfildern, Germany
Telephone: +49 711 3409-0, Telefax: +49 711 3409-133, E-Mail: pilz.gmbh@pilz.de

Up to PL e of EN ISO 13849-1
PNOZ X8P

Electrical data	
Voltage and current at	
Input circuit DC: **24.0 V**	**40.0 mA** No. 777764, 777765, 777766, 777768, 777770, 787764, 787765, 787766, 787768, 787770 **45.0 mA** No. 777760, 787760
Reset circuit DC: **24.0 V**	**50.0 mA** No. 777760, 787760 **60.0 mA** No. 777764, 777765, 777766, 777768, 777770, 787764, 787765, 787766, 787768, 787770
Feedback loop DC: **24.0 V**	**50.0 mA** No. 777760, 787760 **60.0 mA** No. 777764, 777765, 777766, 777768, 777770, 787764, 787765, 787766, 787768, 787770
Number of output contacts	
Safety contacts (S) instantaneous:	**3**
Auxiliary contacts (N/C):	**2**
Utilisation category in accordance with **EN 60947-4-1**	
Safety contacts: AC1 at **240 V**	I_{min}: **0.01 A** , I_{max}: **8.0 A** P_{max}: **2000 VA**
Safety contacts: DC1 at **24 V**	I_{min}: **0.01 A** , I_{max}: **8.0 A** P_{max}: **200 W**
Auxiliary contacts: AC1 at **240 V**	I_{min}: **0.01 A** , I_{max}: **8.0 A** P_{max}: **2000 VA**
Auxiliary contacts: DC1 at **24 V**	I_{min}: **0.01 A** , I_{max}: **8.0 A** P_{max}: **200 W**
Utilisation category in accordance with **EN 60947-5-1**	
Safety contacts: AC15 at **230 V**	I_{max}: **5.0 A**
Safety contacts: DC13 at **24 V** (6 cycles/min)	I_{max}: **7.0 A**
Auxiliary contacts: AC15 at **230 V**	I_{max}: **5.0 A**
Auxiliary contacts: DC13 at **24 V** (6 cycles/min)	I_{max}: **7.0 A**
Contact material	**AgSnO2 + 0.2 µm Au**
External contact fuse protection (I_K = 1 kA) to **EN 60947-5-1**	
Blow-out fuse, quick	
Safety contacts:	**10 A**
Auxiliary contacts:	**10 A**
Blow-out fuse, slow	
Safety contacts:	**6 A**
Auxiliary contacts:	**6 A**
Circuit breaker 24 VAC/DC, characteristic B/C	
Safety contacts:	**6 A**
Auxiliary contacts:	**6 A**
Semiconductor outputs (short circuit proof)	**24.0 V** DC, **50 mA**
External supply voltage	**24.0 V** DC
Voltage tolerance	**-20 %/+20 %**
Max. overall cable resistance R_{lmax} input circuits, reset circuits	
single-channel at U_B DC	**100 Ohm** No. 777760, 787760
single-channel at U_B AC	**100 Ohm** No. 777764, 777765, 777766, 777768, 777770, 787764, 787765, 787766, 787768, 787770
dual-channel without detect. of shorts across contacts at U_B DC	**200 Ohm** No. 777760, 787760
dual-channel without detect. of shorts across contacts at U_B AC	**200 Ohm** No. 777764, 777765, 777766, 777768, 777770, 787764, 787765, 787766, 787768, 787770
dual-channel with detect. of shorts across contacts at U_B DC	**16 Ohm** No. 777760, 787760
dual-channel with detect. of shorts across contacts at U_B AC	**28 Ohm** No. 777764, 777765, 777766, 777768, 777770, 787764, 787765, 787766, 787768, 787770
Min. input resistance when switching on	**89 Ohm**

Up to PL e of EN ISO 13849-1
PNOZ X8P

Safety-related characteristic data	
PL in accordance with **EN ISO 13849-1: 2006**	**PL e** (**Cat. 4**)
Category in accordance with **EN 954-1**	**Cat. 4**
SIL CL in accordance with **EN IEC 62061**	**SIL CL 3**
PFH in accordance with **EN IEC 62061**	**2.31E-09**
SIL in accordance with **IEC 61511**	**SIL 3**
PFD in accordance with **IEC 61511**	**2.03E-06**
T_M [year] in accordance with **EN ISO 13849-1: 2006**	**20**
Times	
Switch-on delay	
with automatic reset typ.	**160 ms** No. 777760, 787760 **175 ms** No. 777764, 777765, 777766, 777768, 777770, 787764, 787765, 787766, 787768, 787770
with automatic reset max.	**200 ms** No. 777760, 787760 **220 ms** No. 777764, 777765, 777766, 777768, 777770, 787764, 787765, 787766, 787768, 787770
with automatic reset after power on typ.	**185 ms** No. 777760, 787760 **200 ms** No. 777764, 777765, 777766, 777768, 777770, 787764, 787765, 787766, 787768, 787770
with automatic reset after power on max.	**220 ms** No. 777760, 787760 **250 ms** No. 777764, 777765, 777766, 777768, 777770, 787764, 787765, 787766, 787768, 787770
with manual reset typ.	**190 ms**
with manual reset max.	**250 ms**
on monitored reset with rising edge typ.	**130 ms**
on monitored reset with rising edge max.	**180 ms**
Delay-on de-energisation	
with E-STOP typ.	**15 ms**
with E-STOP max.	**30 ms**
with power failure typ.	**100 ms** No. 777760, 787760 **160 ms** No. 777764, 777765, 777766, 777768, 777770, 787764, 787765, 787766, 787768, 787770
with power failure max.	**200 ms** No. 777760, 787760 **220 ms** No. 777764, 777765, 777766, 777768, 777770, 787764, 787765, 787766, 787768, 787770
Recovery time at max. switching frequency 1/s	
after E-STOP	**50 ms**
after power failure	**180 ms** No. 777760, 787760 **250 ms** No. 777764, 777765, 777766, 777768, 777770, 787764, 787765, 787766, 787768, 787770
Min. start pulse duration with a monitored reset	
with rising edge	**30 ms**
Simultaneity, channel 1 and 2	**150 ms**
Supply interruption before de-energisation	**35 ms**
Environmental data	
EMC	**EN 60947-5-1**, **EN 61000-6-2**
Vibration to **EN 60068-2-6**	
Frequency	**10 - 55 Hz**
Amplitude	**0.35 mm**
Climatic suitability	**EN 60068-2-78**
Airgap creepage in accordance with **EN 60947-1**	
Pollution degree	**2**
Overvoltage category	**III**
Rated insulation voltage	**250 V**
Rated impulse withstand voltage	**4.00 kV**
Ambient temperature	**-10 - 55 °C**
Storage temperature	**-40 - 85 °C**

Pilz GmbH & Co. KG, Felix-Wankel-Straße 2, 73760 Ostfildern, Germany
Telephone: +49 711 3409-0, Telefax: +49 711 3409-133, E-Mail: pilz.gmbh@pilz.de

Up to PL e of EN ISO 13849-1
PNOZ X8P

Environmental data	
Protection type	
Mounting (e.g. cabinet)	**IP54**
Housing	**IP40**
Terminals	**IP20**
Mechanical data	
Housing material	
Housing	**PPO UL 94 V0**
Front	**ABS UL 94 V0**
Cross section of external conductors with screw terminals	
1 core flexible	**0.25 - 2.50 mm² , 24 - 12 AWG** No. 777760, 777764, 777765, 777766, 777768, 777770
2 core, same cross section, flexible:	
with crimp connectors, without insulating sleeve	**0.25 - 1.00 mm² , 24 - 16 AWG** No. 777760, 777764, 777765, 777766, 777768, 777770
without crimp connectors or with TWIN crimp connectors	**0.20 - 1.50 mm² , 24 - 16 AWG** No. 777760, 777764, 777765, 777766, 777768, 777770
Torque setting with screw terminals	**0.50 Nm** No. 777760, 777764, 777765, 777766, 777768, 777770
Cross section of external conductors with spring-loaded terminals: Flexible with/without crimp connectors	**0.20 - 1.50 mm² , 24 - 16 AWG** No. 787760, 787764, 787765, 787766, 787768, 787770
Spring-loaded terminals: Terminal points per connection	**2** No. 787760, 787764, 787765, 787766, 787768, 787770
Stripping length	**8 mm** No. 787760, 787764, 787765, 787766, 787768, 787770
Dimensions	
Height	**101.0 mm** No. 787760, 787764, 787765, 787766, 787768, 787770 **94.0 mm** No. 777760, 777764, 777765, 777766, 777768, 777770
Width	**45.0 mm**
Depth	**121.0 mm**
Weight	**310 g** No. 787760 **320 g** No. 777760 **410 g** No. 787764, 787765, 787766, 787768, 787770 **420 g** No. 777764, 777765, 777766, 777768, 777770

No. stands for order number.

It is essential to consider the relay's service life graphs. The relay outputs' safety-related characteristic data is only valid if the values in the service life graphs are met.

The PFH value depends on the switching frequency and the load on the relay output.
If the service life graphs are not accessible, the stated PFH value can be used irrespective of the switching frequency and the load, as the PFH value already considers the relay's B10d value as well as the failure rates of the other components.

All the units used within a safety function must be considered when calculating the safety characteristic data.

INFORMATION
A safety function's SIL/PL values are **not** identical to the SIL/PL values of the units that are used and may be different. We recommend that you use the PAScal software tool to calculate the safety function's SIL/PL values.

The standards current on **2009-11** apply.

Up to PL e of EN ISO 13849-1
PNOZ X8P

Conventional thermal current while loading several contacts

Number of contacts	I_{th} per contact at U_B DC	I_{th} at U_B AC
1	**8.00 A** No. 777760, 787760	**8.00 A** No. 777764, 777765, 777766, 777768, 777770, 787764, 787765, 787766, 787768, 787770
2	**8.00 A** No. 777760, 787760	**7.30 A** No. 777764, 777765, 777766, 777768, 777770, 787764, 787765, 787766, 787768, 787770
3	**7.00 A** No. 777760, 787760	**6.00 A** No. 777764, 777765, 777766, 777768, 777770, 787764, 787765, 787766, 787768, 787770

Order reference

Type	Features	Terminals	Order no.
PNOZ X8P C	24 VDC	Spring-loaded terminals	787 760
PNOZ X8P	24 VDC	Screw terminals	777 760
PNOZ X8P C	110 VAC	Spring-loaded terminals	787 764
PNOZ X8P	110 VAC	Screw terminals	777 764
PNOZ X8P C	115 VAC	Spring-loaded terminals	787 765
PNOZ X8P	115 VAC	Screw terminals	777 765
PNOZ X8P C	120 VAC	Spring-loaded terminals	787 766
PNOZ X8P	120 VAC	Screw terminals	777 766
PNOZ X8P C	230 VAC	Spring-loaded terminals	787 768
PNOZ X8P	230 VAC	Screw terminals	777 768
PNOZ X8P C	24 VAC	Spring-loaded terminals	787 770
PNOZ X8P	24 VAC	Screw terminals	777 770

Pilz GmbH & Co. KG, Felix-Wankel-Straße 2, 73760 Ostfildern, Germany
Telephone: +49 711 3409-0, Telefax: +49 711 3409-133, E-Mail: pilz.gmbh@pilz.de

Up to PL e of EN ISO 13849-1
PNOZ X9P



Safety relay for monitoring E-STOP pushbuttons, safety gates and light beam devices

Approvals

	PNOZ X9P
c UL us LISTED	◆
TÜV	◆
CCC	◆

Order no. 777607 is without approval

Unit features

- Positive-guided relay outputs:
  - 7 safety contacts (N/O), instantaneous
  - 2 auxiliary contacts (N/C), instantaneous
- 2 semiconductor outputs
- Connection options for:
  - E-STOP pushbutton
  - Safety gate limit switch
  - Light barriers
  - Reset button
- LED indicator for:
  - Switch status channel 1/2
  - Input circuits
  - Supply voltage
  - Reset circuit
- Semiconductor outputs signal:
  - Switch status channel 1/2
  - Supply voltage is present
- Plug-in connection terminals (either spring-loaded terminal or screw terminal)
- See order reference for unit types

Unit description

The safety relay meets the requirements of EN 60947-5-1, EN 60204-1 and VDE 0113-1 and may be used in applications with
- E-STOP pushbuttons
- Safety gates
- Light beam devices

Safety features

The relay meets the following safety requirements:
- The circuit is redundant with built-in self-monitoring.
- The safety function remains effective in the case of a component failure.
- The correct opening and closing of the safety function relays is tested automatically in each on-off cycle.
- The unit has an electronic fuse.

Block diagram

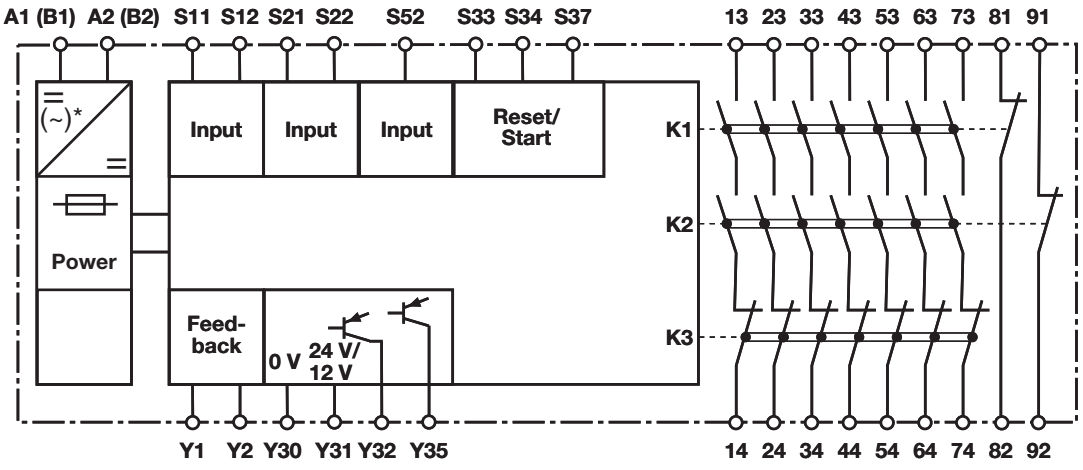

*Only applies when U_B = 100 - 240 VAC

Up to PL e of EN ISO 13849-1
PNOZ X9P

Function description

- Single-channel operation: no redundancy in the input circuit, earth faults in the reset and input circuit are detected.
- Dual-channel operation without detection of shorts across contacts: redundant input circuit, detects
  - earth faults in the reset and input circuit,
  - short circuits in the input circuit and, with a monitored reset, in the reset circuit too.
- Dual-channel operation with detection of shorts across contacts: redundant input circuit, detects
  - earth faults in the reset and input circuit,
  - short circuits in the input circuit and, with a monitored reset, in the reset circuit too,
  - shorts between contacts in the input circuit.
- Automatic start: Unit is active once the input circuit has been closed.
- Manual reset: Unit is active once the input circuit is closed and then the reset circuit is closed.
- Monitored reset: Unit is active once
  - the input circuit is closed and then the reset circuit is closed and opened again.
  - the reset circuit is closed and then opened again once the input circuit is closed.
- Increase in the number of available instantaneous safety contacts by connecting contact expansion modules or external contactors.

2.2

Timing diagram

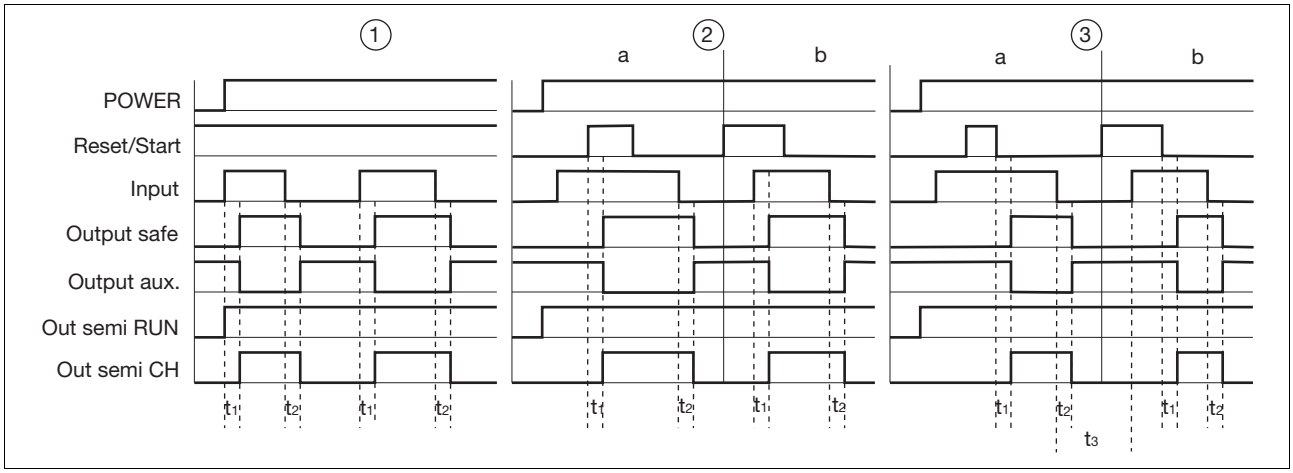

Key

- Power: Supply voltage
- Reset/Start: Reset circuit S33-S34
- Input: Input circuits S11-S12, S21-S22, S52
- Output safe: Safety contacts 13-14, 23-24, 33-34, 43-44, 53-54, 63-64, 73-74
- Output aux: Auxiliary contacts 81-82, 91-92
- Out semi RUN: Semiconductor output supply voltage Y35
- Out semi CH: Semiconductor output switch status Y32
- ①: Automatic reset
- ②: Manual reset
- ③: Monitored reset
- a: Input circuit closes before reset circuit
- b: Reset circuit closes before input circuit
- t_1: Switch-on delay
- t_2: Delay-on de-energisation
- t_3: Recovery time

Wiring

Please note:

- Information given in the “Technical details” must be followed.
- Outputs 13-14, 23-24, 33-34, 43-44, 53-54, 63-64, 73-74 are safety contacts, outputs 81-82, 91-92 are auxiliary contacts (e.g. for display).
- To prevent contact welding, a fuse should be connected before the output contacts (see technical details).
- Calculation of the max. cabling runs I_{max} in the input circuit:

$$I_{max} = \frac{R_{lmax}}{R_l / km}$$

R_{lmax} = max. overall cable resistance (see technical details)
R_l /km = cable resistance/km

- Use copper wire that can withstand 60/75 °C.
- Sufficient fuse protection must be provided on all output contacts with capacitive and inductive loads.

Pilz GmbH & Co. KG, Felix-Wankel-Straße 2, 73760 Ostfildern, Germany
Telephone: +49 711 3409-0, Telefax: +49 711 3409-133, E-Mail: pilz.gmbh@pilz.de
1002009-EN-03-2011-11

Up to PL e of EN ISO 13849-1
PNOZ X9P

Preparing for operation

- Supply voltage

Supply voltage	AC	DC
U_B = 12 VDC/24 VDC/100 – 240 VAC	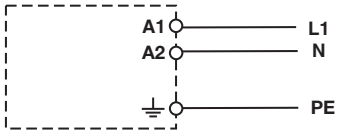	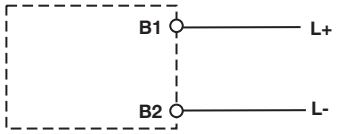
U_B = 12 VDC/24 VDC		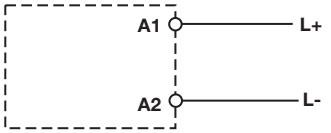

- Input circuit

Input circuit	Single-channel	Dual-channel
E-STOP **without** detection of shorts across contacts	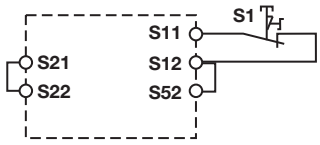	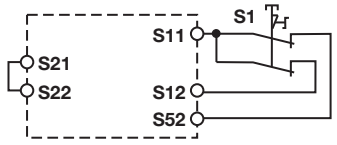
E-STOP **with** detection of shorts across contacts		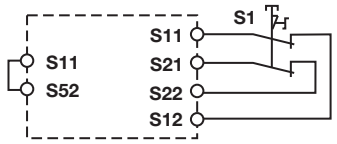
Safety gate **without** detection of shorts across contacts	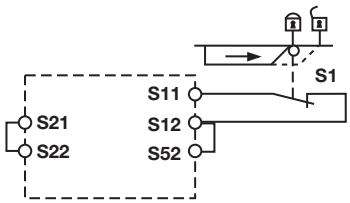	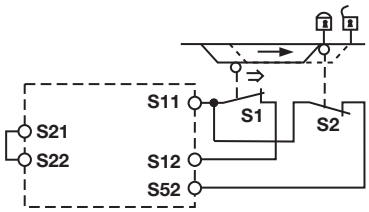
Safety gate **with** detection of shorts across contacts		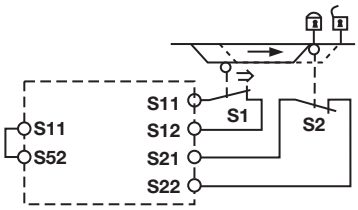
Light beam device **with** detection of shorts across contacts via ESPE		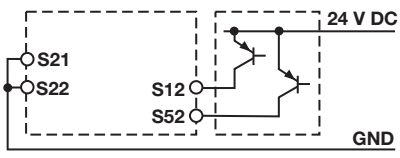

2.2

Up to PL e of EN ISO 13849-1
PNOZ X9P

▸ Reset circuit

Reset circuit	E-STOP/safety gate wiring (single-channel and dual-channel without shorts across contacts)	E-STOP/safety gate wiring (dual-channel with shorts across contacts)
Automatic reset		
Manual reset	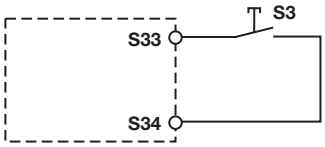	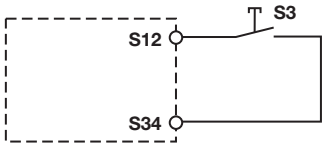
Monitored reset	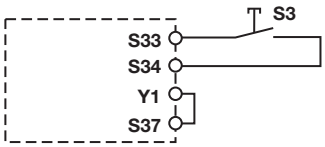	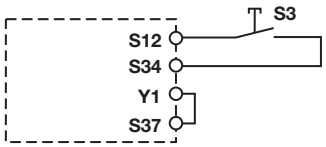

▸ Feedback circuit

Feedback circuit	
Contacts from external contactors	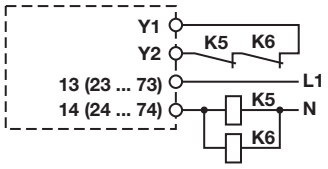

▸ Semiconductor output

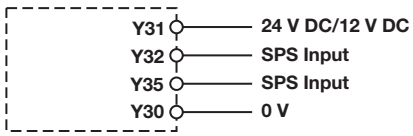

▸ Key

S1/S2	E-STOP/safety gate switch
S3	Reset button
	Switch operated
	Gate open
	Gate closed

Pilz GmbH & Co. KG, Felix-Wankel-Straße 2, 73760 Ostfildern, Germany
Telephone: +49 711 3409-0, Telefax: +49 711 3409-133, E-Mail: pilz.gmbh@pilz.de

Up to PL e of EN ISO 13849-1
PNOZ X9P

Terminal configuration

U_B = 12 VDC/24 VDC

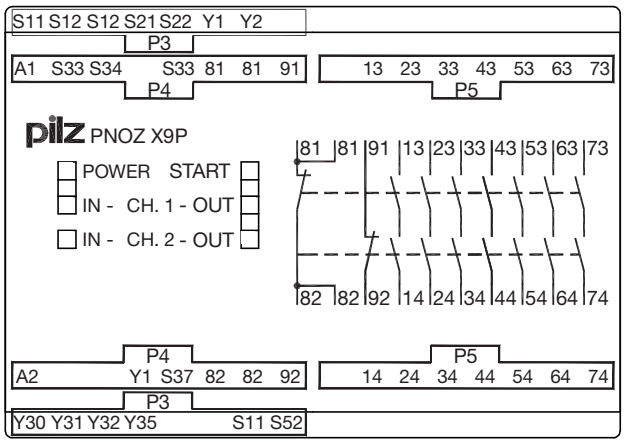

U_B = 24 VDC/100 -240 VAC

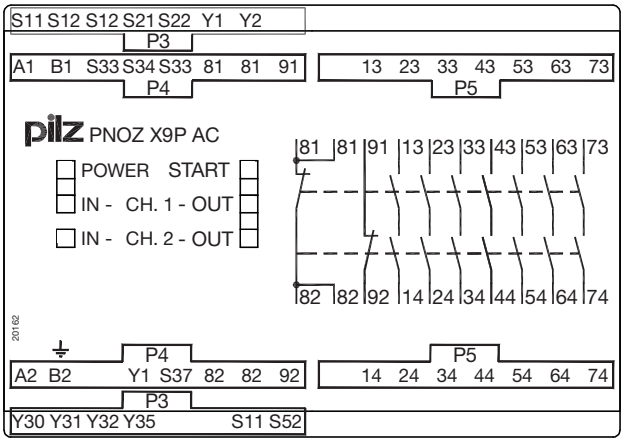

Installation

- The safety relay should be installed in a control cabinet with a protection type of at least IP54.
- Use the notch on the rear of the unit to attach it to a DIN rail.
- Ensure the unit is mounted securely on a vertical DIN rail (35 mm) by using a fixing element (e.g. retaining bracket or an end angle).

Dimensions

* with spring-loaded terminals

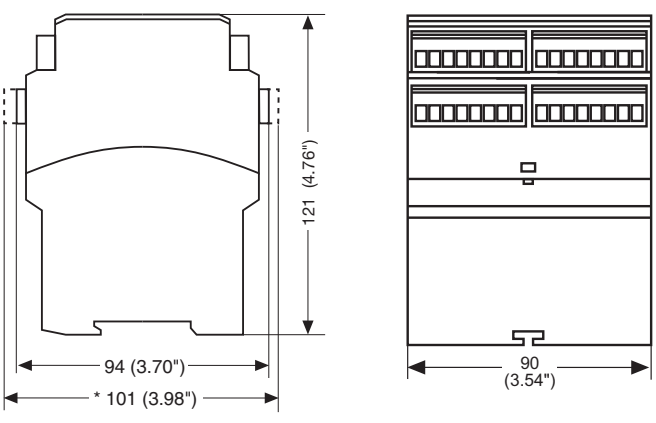

Up to PL e of EN ISO 13849-1
PNOZ X9P

Notice

This data sheet is only intended for use during configuration. Please refer to the operating manual for installation and operation.

Service life graph

The service life graphs indicate the number of cycles from which failures due to wear must be expected. The wear is mainly caused by the electrical load; the mechanical load is negligible.

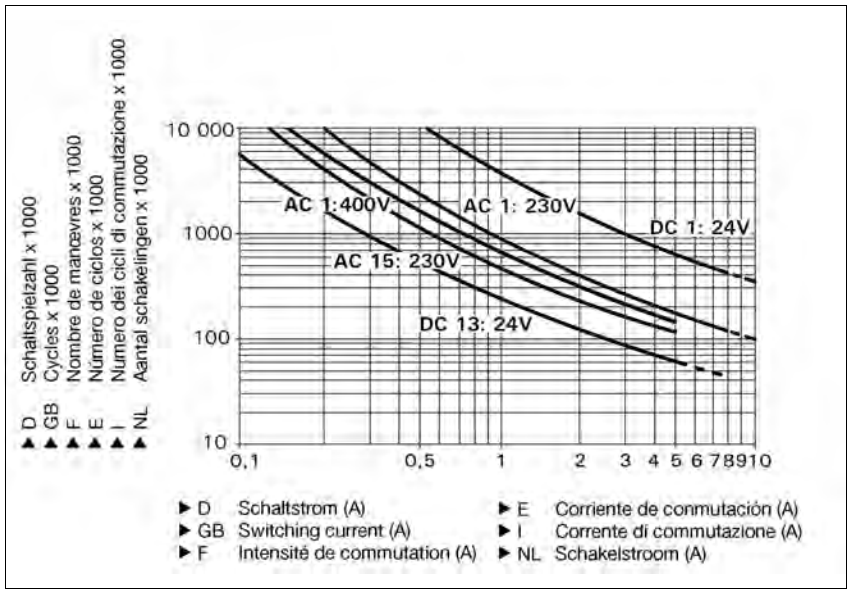

Example
- Inductive load: 0,2 A
- Utilisation category: AC15
- Contact service life: 4,000,000 cycles

Provided the application requires fewer than 4,000,000 cycles, the PFH value (see technical details) can be used in the calculation.

To increase the service life, sufficient spark suppression must be provided on all output contacts. With capacitive loads, any power surges that occur must be noted. With contactors, use freewheel diodes for spark suppression.

Technical details

Electrical data	
Supply voltage	
Supply voltage U_B AC	**100 - 240 V**
Supply voltage U_B DC	**12 V**, **24 V**
Voltage tolerance	**-15 %/+10 %** No. 777606, 777609, 787606, 787609 **-20 %/+20 %** No. 777607
Power consumption at U_B AC	**8.5 VA** No. 777606, 787606
Power consumption at U_B DC	**5.5 W** No. 777606, 777609, 787606, 787609 **7.0 W** No. 777607
Frequency range AC	**50 - 60 Hz**
Residual ripple DC	**160 %**

Pilz GmbH & Co. KG, Felix-Wankel-Straße 2, 73760 Ostfildern, Germany
Telephone: +49 711 3409-0, Telefax: +49 711 3409-133, E-Mail: pilz.gmbh@pilz.de

Up to PL e of EN ISO 13849-1
PNOZ X9P

Electrical data	
Voltage and current at	
Input circuit DC: **12.0 V** No. 777607	**130.0 mA** No. 777607
24.0 V No. 777606, 777609, 787606, 787609	**50.0 mA** No. 777606, 777609, 787606, 787609
Reset circuit DC: **12.0 V** No. 777607	**100.0 mA** No. 777606, 777609, 787606, 787609
24.0 V No. 777606, 777609, 787606, 787609	**200.0 mA** No. 777607
Feedback loop DC: **12.0 V** No. 777607	**100.0 mA** No. 777606, 777609, 787606, 787609
24.0 V No. 777606, 777609, 787606, 787609	**200.0 mA** No. 777607
Number of output contacts	
Safety contacts (S) instantaneous:	**7**
Auxiliary contacts (N/C):	**2**
Utilisation category in accordance with **EN 60947-4-1**	
Safety contacts: AC1 at **240 V**	I_{min}: **0.01 A** , I_{max}: **8.0 A** P_{max}: **2000 VA**
Safety contacts: DC1 at **24 V**	I_{min}: **0.01 A** , I_{max}: **8.0 A** P_{max}: **200 W**
Auxiliary contacts: AC1 at **240 V**	I_{min}: **0.01 A** , I_{max}: **8.0 A** P_{max}: **2000 VA**
Auxiliary contacts: DC1 at **24 V**	I_{min}: **0.01 A** , I_{max}: **8.0 A** P_{max}: **200 W**
Utilisation category in accordance with **EN 60947-5-1**	
Safety contacts: AC15 at **230 V**	I_{max}: **5.0 A**
Safety contacts: DC13 at **24 V** (6 cycles/min)	I_{max}: **7.0 A**
Auxiliary contacts: AC15 at **230 V**	I_{max}: **5.0 A**
Auxiliary contacts: DC13 at **24 V** (6 cycles/min)	I_{max}: **7.0 A**
Contact material	**AgSnO2 + 0.2 µm Au**
External contact fuse protection (I_K = 1 kA) to **EN 60947-5-1**	
Blow-out fuse, quick	
Safety contacts:	**10 A**
Auxiliary contacts:	**10 A**
Blow-out fuse, slow	
Safety contacts:	**6 A**
Auxiliary contacts:	**6 A**
Circuit breaker 24 VAC/DC, characteristic B/C	
Safety contacts:	**6 A**
Auxiliary contacts:	**6 A**
Semiconductor outputs (short circuit proof)	**12.0 V** No. 777607 **24.0 V** No. 777606, 777609, 787606, 787609 DC, **20 mA**
External supply voltage	**12.0 V** No. 777607 **24.0 V** No. 777606, 777609, 787606, 787609 DC
Voltage tolerance	**-20 %/+20 %**
Max. overall cable resistance R_{lmax} input circuits, reset circuits	
single-channel at U_B DC	**45 Ohm** No. 777606, 777609, 787606, 787609 **8 Ohm** No. 777607
single-channel at U_B AC	**45 Ohm** No. 777606, 787606
dual-channel without detect. of shorts across contacts at U_B DC	**15 Ohm** No. 777607 **90 Ohm** No. 777606, 777609, 787606, 787609
dual-channel without detect. of shorts across contacts at U_B AC	**90 Ohm** No. 777606, 787606
dual-channel with detect. of shorts across contacts at U_B DC	**15 Ohm** No. 777606, 777609, 787606, 787609 **8 Ohm** No. 777607
dual-channel with detect. of shorts across contacts at U_B AC	**15 Ohm** No. 777606, 787606
Min. input resistance when switching on	**89 Ohm** No. 777609, 787609 **9 Ohm** No. 777607

Up to PL e of EN ISO 13849-1
PNOZ X9P

Safety-related characteristic data	
PL in accordance with **EN ISO 13849-1: 2006**	**PL e** (**Cat. 4**)
Category in accordance with **EN 954-1**	**Cat. 4**
SIL CL in accordance with **EN IEC 62061**	**SIL CL 3**
PFH in accordance with **EN IEC 62061**	**2.31E-09**
SIL in accordance with **IEC 61511**	**SIL 3**
PFD in accordance with **IEC 61511**	**2.03E-06**
T_M [year] in accordance with **EN ISO 13849-1: 2006**	**20**
Times	
Switch-on delay	
with automatic reset typ.	**130 ms** No. 777607
	200 ms No. 777606, 777609, 787606, 787609
with automatic reset max.	**200 ms** No. 777607
	250 ms No. 777606, 777609, 787606, 787609
with automatic reset after power on typ.	**150 ms** No. 777607
	220 ms No. 777606, 777609, 787606, 787609
with automatic reset after power on max.	**220 ms** No. 777607
	300 ms No. 777606, 777609, 787606, 787609
with manual reset typ.	**150 ms** No. 777607
	200 ms No. 777606, 777609, 787606, 787609
with manual reset max.	**200 ms** No. 777607
	250 ms No. 777606, 777609, 787606, 787609
on monitored reset with falling edge typ.	**100 ms** No. 777607
	150 ms No. 777606, 777609, 787606, 787609
on monitored reset with falling edge max.	**150 ms** No. 777607
	220 ms No. 777606, 777609, 787606, 787609
Delay-on de-energisation	
with E-STOP typ.	**20 ms**
with E-STOP max.	**30 ms**
with power failure typ.	**170 ms** No. 777606, 777609, 787606, 787609
	60 ms No. 777607
with power failure max.	**250 ms** No. 777606, 777609, 787606, 787609
	80 ms No. 777607
with power failure typ. U_B AC: **100 V**, **100 V**	**165 ms** No. 777606, 787606
with power failure max. U_B AC: **100 V**, **100 V**	**200 ms** No. 777606, 787606
with power failure typ. U_B AC : **240 V**	**320 ms** No. 777606, 787606
with power failure max. U_B AC : **240 V**	**450 ms** No. 777606, 787606
Recovery time at max. switching frequency 1/s	
after E-STOP	**50 ms**
after power failure	**100 ms** No. 777607
	300 ms No. 777606, 777609, 787606, 787609
after power failure on universal power supply	**500 ms** No. 777606, 787606
Min. start pulse duration with a monitored reset	
with falling edge	**30 ms** No. 777607
	50 ms No. 777606, 777609, 787606, 787609
Simultaneity, channel 1 and 2	**150 ms** No. 777606, 777609, 787606, 787609
	50 ms No. 777607
Supply interruption before de-energisation	**20 ms**
Environmental data	
EMC	**EN 60947-5-1**, **EN 61000-6-2**
Vibration to **EN 60068-2-6**	
Frequency	**10 - 55 Hz**
Amplitude	**0.35 mm**
Climatic suitability	**EN 60068-2-78**
Airgap creepage in accordance with **EN 60947-1**	
Pollution degree	**2**
Overvoltage category	**III**
Rated insulation voltage	**250 V**
Rated impulse withstand voltage	**4.00 kV**

Pilz GmbH & Co. KG, Felix-Wankel-Straße 2, 73760 Ostfildern, Germany
Telephone: +49 711 3409-0, Telefax: +49 711 3409-133, E-Mail: pilz.gmbh@pilz.de

Up to PL e of EN ISO 13849-1
PNOZ X9P

Environmental data	
Ambient temperature	**-10 - 55 °C**
Storage temperature	**-40 - 85 °C**
Protection type	
Mounting (e.g. cabinet)	**IP54**
Housing	**IP40**
Terminals	**IP20**
Mechanical data	
Housing material	
Housing	**PPO UL 94 V0**
Front	**ABS UL 94 V0**
Cross section of external conductors with screw terminals	
1 core flexible	**0.25 - 2.50 mm² , 24 - 12 AWG** No. 777606, 777607, 777609
2 core, same cross section, flexible:	
with crimp connectors, without insulating sleeve	**0.25 - 1.00 mm² , 24 - 16 AWG** No. 777606, 777607, 777609
without crimp connectors or with TWIN crimp connectors	**0.20 - 1.50 mm² , 24 - 16 AWG** No. 777606, 777607, 777609
Torque setting with screw terminals	**0.50 Nm** No. 777606, 777607, 777609
Cross section of external conductors with spring-loaded terminals: Flexible with/without crimp connectors	**0.20 - 1.50 mm² , 24 - 16 AWG** No. 787606, 787609
Spring-loaded terminals: Terminal points per connection	**2** No. 787606, 787609
Stripping length	**8 mm** No. 787606, 787609
Dimensions	
Height	**101.0 mm** No. 787606, 787609 **94.0 mm** No. 777606, 777607, 777609
Width	**90.0 mm**
Depth	**121.0 mm**
Weight	**570 g** No. 787609 **575 g** No. 787606 **580 g** No. 777607, 777609 **585 g** No. 777606

No. stands for order number.

It is essential to consider the relay's service life graphs. The relay outputs' safety-related characteristic data is only valid if the values in the service life graphs are met.

The PFH value depends on the switching frequency and the load on the relay output.
If the service life graphs are not accessible, the stated PFH value can be used irrespective of the switching frequency and the load, as the PFH value already considers the relay's B10d value as well as the failure rates of the other components.

All the units used within a safety function must be considered when calculating the safety characteristic data.

INFORMATION
A safety function's SIL/PL values are **not** identical to the SIL/PL values of the units that are used and may be different. We recommend that you use the PAScal software tool to calculate the safety function's SIL/PL values.

The standards current on **2009-11** apply.

Up to PL e of EN ISO 13849-1
PNOZ X9P

Conventional thermal current while loading several contacts

Number of contacts	I_{th} per contact at U_B DC	I_{th} at U_B AC
1	**8.00 A**	**8.00 A** No. 777606, 787606
2	**8.00 A**	**8.00 A** No. 777606, 787606
3	**8.00 A**	**8.00 A** No. 777606, 787606
4	**7.00 A**	**7.00 A** No. 777606, 787606
5	**6.00 A**	**6.00 A** No. 777606, 787606
6	**5.50 A**	**5.50 A** No. 777606, 787606
7	**5.00 A**	**5.00 A** No. 777606, 787606

Order reference

Type	Features		Terminals	Order no.
PNOZ X9P C	110 - 240 VAC	24 VDC	Spring-loaded terminals	787 606
PNOZ X9P	110 - 240 VAC	24 VDC	Screw terminals	777 606
PNOZ X9P C		24 VDC	Spring-loaded terminals	787 609
PNOZ X9P		24 VDC	Screw terminals	777 609
PNOZ X9P		12 VDC	Screw terminals	777 607

Pilz GmbH & Co. KG, Felix-Wankel-Straße 2, 73760 Ostfildern, Germany
Telephone: +49 711 3409-0, Telefax: +49 711 3409-133, E-Mail: pilz.gmbh@pilz.de

Up to PL e of EN ISO 13849-1
PNOZ X10.11P



Safety relay for monitoring E-STOP pushbuttons, safety gates and light beam devices

Approvals

	PNOZ X10.11P
c UL us LISTED	◆
TÜV SÜD	◆
CCC	◆

Unit features

- Positive-guided relay outputs:
  - 6 safety contacts (N/O), instantaneous
  - 4 auxiliary contacts (N/C), instantaneous
- Connection options for:
  - E-STOP pushbutton
  - Safety gate limit switch
  - Reset button
  - Light barriers
- LED indicator for:
  - Switch status channel 1/2
  - Supply voltage
  - Reset circuit
  - Input circuits
- Plug-in connection terminals (either spring-loaded terminal or screw terminal)

Unit description

The safety relay meets the requirements of EN 60947-5-1, EN 60204-1 and VDE 0113-1 and may be used in applications with

- E-STOP pushbuttons
- Safety gates
- Light beam devices

Safety features

The relay meets the following safety requirements:

- The circuit is redundant with built-in self-monitoring.
- The safety function remains effective in the case of a component failure.
- The correct opening and closing of the safety function relays is tested automatically in each on-off cycle.
- The unit has an electronic fuse.

Block diagram

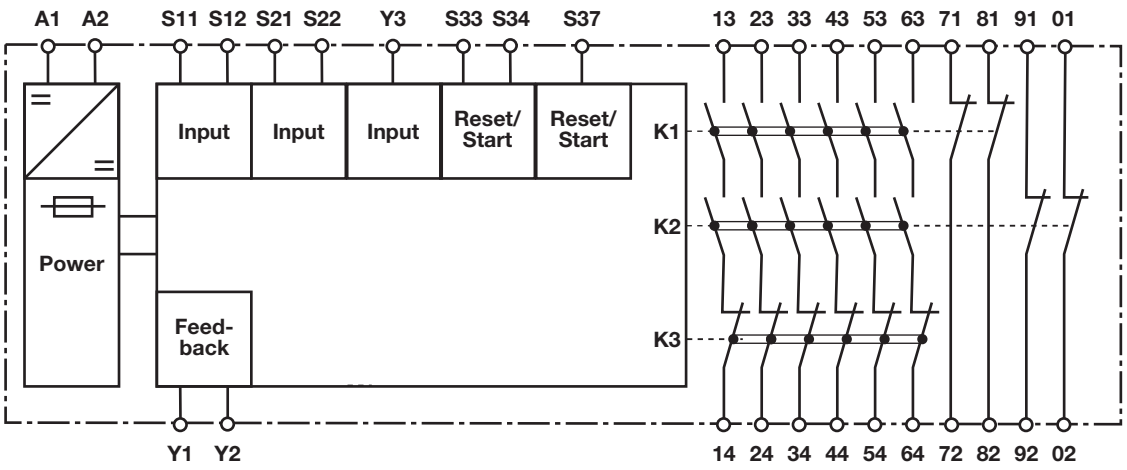

Up to PL e of EN ISO 13849-1
PNOZ X10.11P

Function description

- Single-channel operation: no redundancy in the input circuit, earth faults in the reset and input circuit are detected.
- Dual-channel operation without detection of shorts across contacts: redundant input circuit, detects
  - earth faults in the reset and input circuit,
  - short circuits in the input circuit and, with a monitored reset, in the reset circuit too.
- Dual-channel operation with detection of shorts across contacts: redundant input circuit, detects
  - earth faults in the reset and input circuit,
  - short circuits in the input circuit and, with a monitored reset, in the reset circuit too,
  - shorts between contacts in the input circuit.
- Automatic start: Unit is active once the input circuit has been closed.
- Manual reset: Unit is active once the input circuit is closed and then the reset circuit is closed.
- Monitored reset: Unit is active once
  - the input circuit is closed and then the reset circuit is closed and opened again.
  - the reset circuit is closed and then opened again once the input circuit is closed.
- Increase in the number of available instantaneous safety contacts by connecting contact expansion modules or external contactors.

2.2

Timing diagram

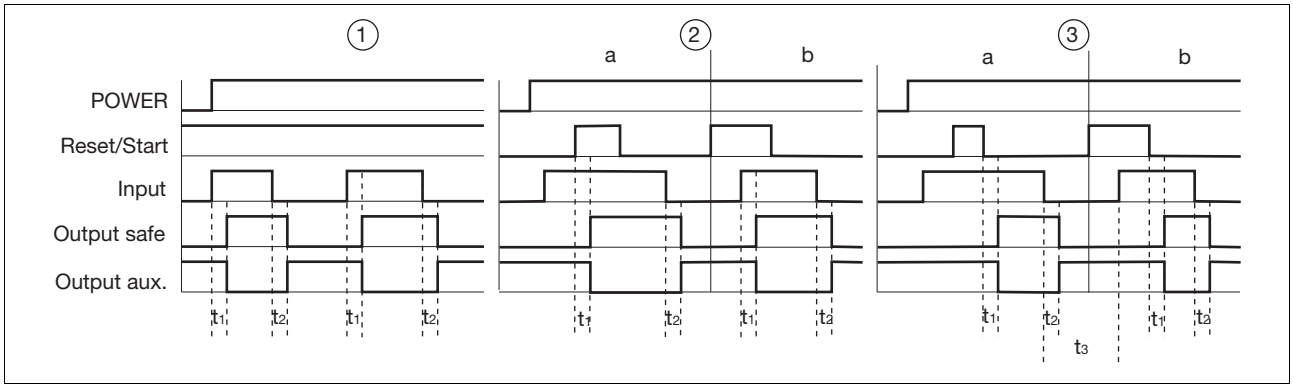

Key

- Power: Supply voltage
- Reset/Start: Reset circuit S33(S12)-S34
- Input: Input circuits S11-S12, S21-S22, Y3
- Output safe: Safety contacts 13-14, 23-24, 33-34, 43-44, 53-54, 63-64
- Output aux: Auxiliary contacts 71-72, 81-82, 91-92, 01-02
- ①: Automatic reset
- ②: Manual reset
- ③: Monitored reset
- a: Input circuit closes before reset circuit
- b: Reset circuit closes before input circuit
- t_1: Switch-on delay
- t_2: Delay-on de-energisation
- t_3: Recovery time

Wiring

Please note:

- Information given in the “Technical details” must be followed.
- Outputs 13-14, 23-24, 33-34, 43-44, 53-54, 63-64 are safety contacts, outputs 71-72, 81-82, 91-92, 01-02 are auxiliary contacts (e.g. for display).
- To prevent contact welding, a fuse should be connected before the output contacts (see technical details).
- Calculation of the max. cabling runs I_{max} in the input circuit:

$$I_{max} = \frac{R_{lmax}}{R_l / km}$$

R_{lmax} = max. overall cable resistance (see technical details)
R_l /km = cable resistance/km

- Use copper wire that can withstand 60/75 °C.
- Sufficient fuse protection must be provided on all output contacts with capacitive and inductive loads.

Pilz GmbH & Co. KG, Felix-Wankel-Straße 2, 73760 Ostfildern, Germany
Telephone: +49 711 3409-0, Telefax: +49 711 3409-133, E-Mail: pilz.gmbh@pilz.de
1001992-EN-03-2011-11

Up to PL e of EN ISO 13849-1
PNOZ X10.11P

Preparing for operation

- Supply voltage

Supply voltage	AC	DC
		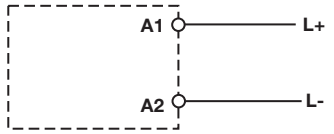

- Input circuit

Input circuit	Single-channel	Dual-channel
E-STOP **without** detection of shorts across contacts	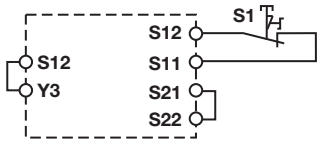	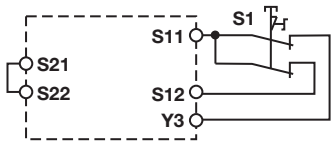
E-STOP **with** detection of shorts across contacts		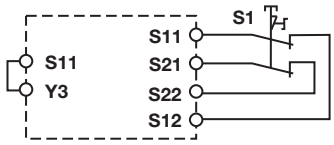
Safety gate **without** detection of shorts across contacts	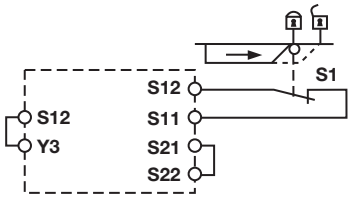	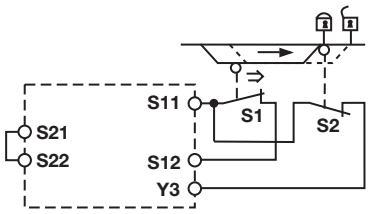
Safety gate **with** detection of shorts across contacts		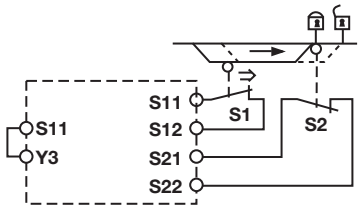
Light beam device **with** detection of shorts across contacts via ESPE		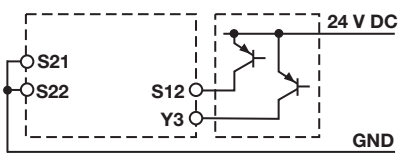

Up to PL e of EN ISO 13849-1
PNOZ X10.11P

▸ Reset circuit

Reset circuit	E-STOP/safety gate wiring (single or dual-channel, without detection of shorts across contacts)	E-STOP/safety gate wiring (dual-channel, with detection of shorts across contacts)
Automatic reset		
Manual reset	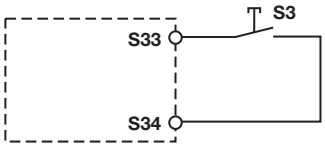	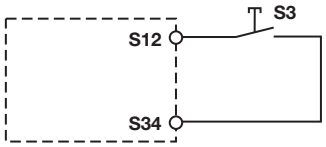
Monitored reset	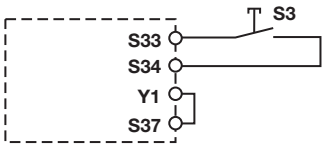	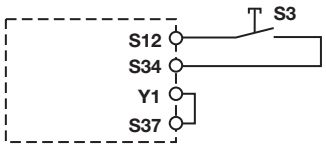

▸ Feedback circuit

Feedback circuit	
Contacts from external contactors	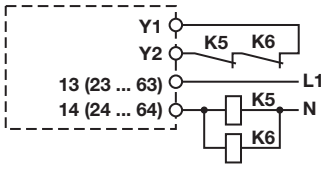

▸ Key

S1/S2	E-STOP/safety gate switch
S3	Reset button
	Switch operated
	Gate open
	Gate closed

Pilz GmbH & Co. KG, Felix-Wankel-Straße 2, 73760 Ostfildern, Germany
Telephone: +49 711 3409-0, Telefax: +49 711 3409-133, E-Mail: pilz.gmbh@pilz.de

Up to PL e of EN ISO 13849-1
PNOZ X10.11P

Terminal configuration

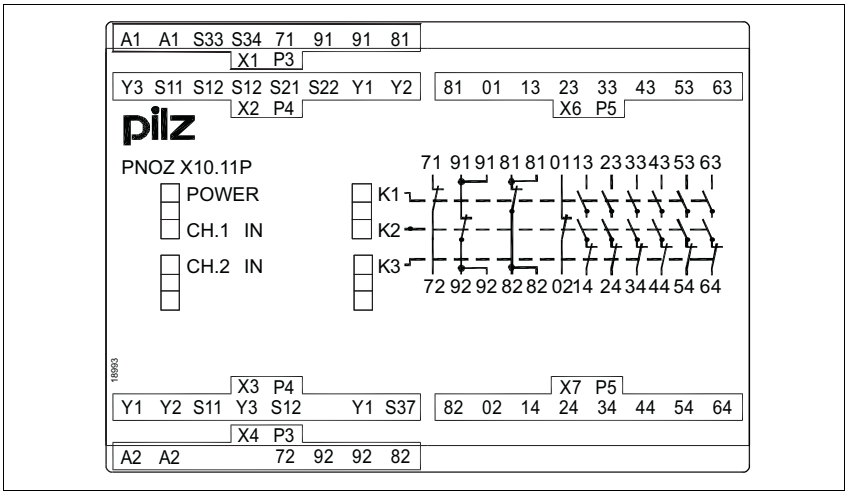

Installation

- The safety relay should be installed in a control cabinet with a protection type of at least IP54.
- Use the notch on the rear of the unit to attach it to a DIN rail.
- Ensure the unit is mounted securely on a vertical DIN rail (35 mm) by using a fixing element (e.g. retaining bracket or an end angle).

Dimensions

* with spring-loaded terminals

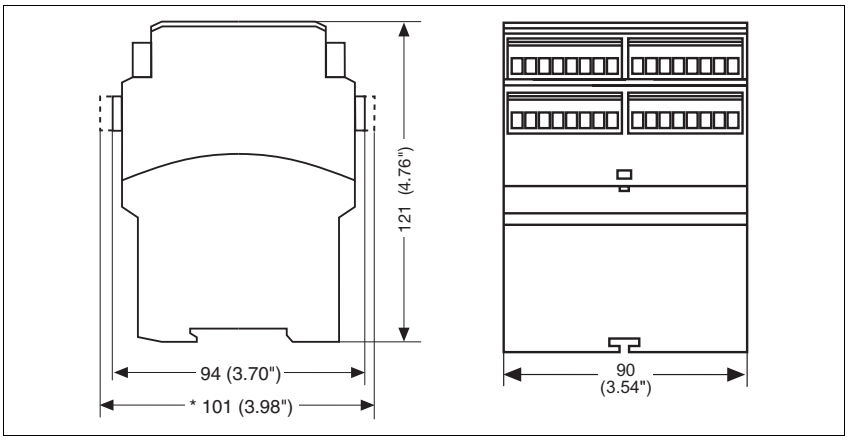

Up to PL e of EN ISO 13849-1
PNOZ X10.11P

Notice

This data sheet is only intended for use during configuration. Please refer to the operating manual for installation and operation.

Service life graph

The service life graphs indicate the number of cycles from which failures due to wear must be expected. The wear is mainly caused by the electrical load; the mechanical load is negligible.

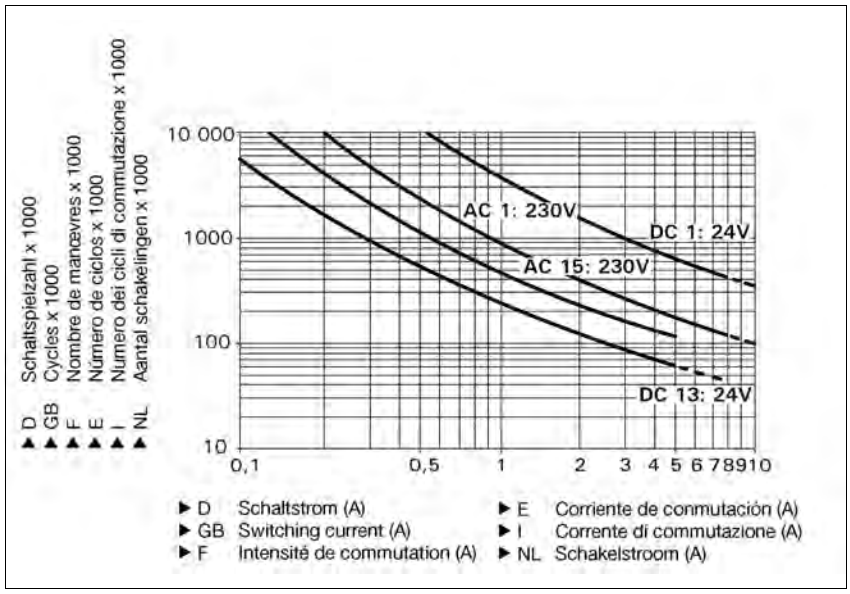

Example
- Inductive load: 0,2 A
- Utilisation category: AC15
- Contact service life: 4,000,000 cycles

Provided the application requires fewer than 4,000,000 cycles, the PFH value (see technical details) can be used in the calculation.

To increase the service life, sufficient spark suppression must be provided on all output contacts. With capacitive loads, any power surges that occur must be noted. With contactors, use freewheel diodes for spark suppression.

Technical details	
Electrical data	
Supply voltage	
Supply voltage U_B DC	**24 V**
Voltage tolerance	**-15 %/+10 %**
Power consumption at U_B DC	**5.5 W**
Residual ripple DC	**160 %**
Voltage and current at	
Input circuit DC: **24.0 V**	**50.0 mA**
Reset circuit DC: **24.0 V**	**100.0 mA**
Feedback loop DC: **24.0 V**	**100.0 mA**
Number of output contacts	
Safety contacts (S) instantaneous:	**6**
Auxiliary contacts (N/C):	**4**

Pilz GmbH & Co. KG, Felix-Wankel-Straße 2, 73760 Ostfildern, Germany
Telephone: +49 711 3409-0, Telefax: +49 711 3409-133, E-Mail: pilz.gmbh@pilz.de

Up to PL e of EN ISO 13849-1
PNOZ X10.11P

Electrical data	
Utilisation category in accordance with **EN 60947-4-1**	
Safety contacts: AC1 at **240 V**	I_{min}: **0.01 A** , I_{max}: **8.0 A** P_{max}: **2000 VA**
Safety contacts: DC1 at **24 V**	I_{min}: **0.01 A** , I_{max}: **8.0 A** P_{max}: **200 W**
Auxiliary contacts: AC1 at **240 V**	I_{min}: **0.01 A** , I_{max}: **8.0 A** P_{max}: **2000 VA**
Auxiliary contacts: DC1 at **24 V**	I_{min}: **0.01 A** , I_{max}: **8.0 A** P_{max}: **200 W**
Utilisation category in accordance with **EN 60947-5-1**	
Safety contacts: AC15 at **230 V**	I_{max}: **5.0 A**
Safety contacts: DC13 at **24 V** (6 cycles/min)	I_{max}: **7.0 A**
Auxiliary contacts: AC15 at **230 V**	I_{max}: **5.0 A**
Auxiliary contacts: DC13 at **24 V** (6 cycles/min)	I_{max}: **7.0 A**
Contact material	**AgSnO2 + 0.2 µm Au**
External contact fuse protection (I_K = 1 kA) to **EN 60947-5-1**	
Blow-out fuse, quick	
Safety contacts:	**10 A**
Auxiliary contacts:	**10 A**
Blow-out fuse, slow	
Safety contacts:	**6 A**
Auxiliary contacts:	**6 A**
Circuit breaker 24 VAC/DC, characteristic B/C	
Safety contacts:	**6 A**
Auxiliary contacts:	**6 A**
Max. overall cable resistance R_{lmax} input circuits, reset circuits	
single-channel at U_B DC	**45 Ohm**
dual-channel without detect. of shorts across contacts at U_B DC	**90 Ohm**
dual-channel with detect. of shorts across contacts at U_B DC	**15 Ohm**
Min. input resistance when switching on	**89 Ohm**
Safety-related characteristic data	
PL in accordance with **EN ISO 13849-1: 2006**	**PL e** (**Cat. 4**)
Category in accordance with **EN 954-1**	**Cat. 4**
SIL CL in accordance with **EN IEC 62061**	**SIL CL 3**
PFH in accordance with **EN IEC 62061**	**2.31E-09**
SIL in accordance with **IEC 61511**	**SIL 3**
PFD in accordance with **IEC 61511**	**2.03E-06**
T_M [year] in accordance with **EN ISO 13849-1: 2006**	**20**
Times	
Switch-on delay	
with automatic reset typ.	**200 ms**
with automatic reset max.	**250 ms**
with automatic reset after power on typ.	**220 ms**
with automatic reset after power on max.	**300 ms**
with manual reset typ.	**200 ms**
with manual reset max.	**250 ms**
on monitored reset with rising edge typ.	**220 ms**
on monitored reset with rising edge max.	**260 ms**
Delay-on de-energisation	
with E-STOP typ.	**20 ms**
with E-STOP max.	**30 ms**
with power failure typ.	**360 ms**
with power failure max.	**480 ms**
Recovery time at max. switching frequency 1/s	
after E-STOP	**50 ms**
after power failure	**500 ms**

Up to PL e of EN ISO 13849-1
PNOZ X10.11P

Times	
Min. start pulse duration with a monitored reset	
with rising edge	**50 ms**
Simultaneity, channel 1 and 2	**150 ms**
Supply interruption before de-energisation	**150 ms**
Environmental data	
EMC	**EN 60947-5-1**, **EN 61000-6-2**
Vibration to **EN 60068-2-6**	
Frequency	**10 - 55 Hz**
Amplitude	**0.35 mm**
Climatic suitability	**EN 60068-2-78**
Airgap creepage in accordance with **EN 60947-1**	
Pollution degree	**2**
Overvoltage category	**III**
Rated insulation voltage	**250 V**
Rated impulse withstand voltage	**4.00 kV**
Ambient temperature	**-10 - 55 °C**
Storage temperature	**-40 - 85 °C**
Protection type	
Mounting (e.g. cabinet)	**IP54**
Housing	**IP40**
Terminals	**IP20**
Mechanical data	
Housing material	
Housing	**PPO UL 94 V0**
Front	**ABS UL 94 V0**
Cross section of external conductors with screw terminals	
1 core flexible	**0.25 - 2.50 mm² , 24 - 12 AWG** No. 777750
2 core, same cross section, flexible:	
with crimp connectors, without insulating sleeve	**0.25 - 1.00 mm² , 24 - 16 AWG** No. 777750
without crimp connectors or with TWIN crimp connectors	**0.20 - 1.50 mm² , 24 - 16 AWG** No. 777750
Torque setting with screw terminals	**0.50 Nm** No. 777750
Cross section of external conductors with spring-loaded terminals: Flexible with/without crimp connectors	**0.20 - 1.50 mm² , 24 - 16 AWG** No. 787750
Spring-loaded terminals: Terminal points per connection	**2** No. 787750
Stripping length	**8 mm** No. 787750
Dimensions	
Height	**101.0 mm** No. 787750 **94.0 mm** No. 777750
Width	**90.0 mm**
Depth	**121.0 mm**
Weight	**560 g** No. 787750 **570 g** No. 777750

No. stands for order number.

It is essential to consider the relay's service life graphs. The relay outputs' safety-related characteristic data is only valid if the values in the service life graphs are met.

The PFH value depends on the switching frequency and the load on the relay output.
If the service life graphs are not accessible, the stated PFH value can be used irrespective of the switching frequency and the load, as the PFH value already considers the relay's B10d value as well as the failure rates of the other components.

All the units used within a safety function must be considered when calculating the safety characteristic data.

Pilz GmbH & Co. KG, Felix-Wankel-Straße 2, 73760 Ostfildern, Germany
Telephone: +49 711 3409-0, Telefax: +49 711 3409-133, E-Mail: pilz.gmbh@pilz.de

Up to PL e of EN ISO 13849-1
PNOZ X10.11P

INFORMATION
A safety function's SIL/PL values are **not** identical to the SIL/PL values of the units that are used and may be different. We recommend that you use the PAScal software tool to calculate the safety function's SIL/PL values.

The standards current on **2009-04** apply.

Conventional thermal current while loading several contacts

Number of contacts	I_{th} per contact at U_B DC
1	**8.00 A**
2	**8.00 A**
3	**8.00 A**
4	**7.00 A**
5	**6.00 A**
6	**5.50 A**

Order reference

Type	Features		Terminals	Order no.
PNOZ X10.11P C		24 VDC	Spring-loaded terminals	787 750
PNOZ X10.11P		24 VDC	Screw terminals	777 750

Up to PL e of EN ISO 13849-1
PNOZ X11P



Safety relay for monitoring E-STOP pushbuttons, safety gates and light beam devices

Approvals

	PNOZ X11P
c UL us LISTED	◆
TÜV SÜD	◆
CCC	◆

Unit features

- Positive-guided relay outputs:
  - 7 safety contacts (N/O), instantaneous
  - 1 auxiliary contact (N/C), instantaneous
- 2 semiconductor outputs
- Connection options for:
  - E-STOP pushbutton
  - Safety gate limit switch
  - Reset button
- LED indicator for:
  - Switch status channel 1/2
  - Supply voltage
  - Reset circuit
  - Input circuits
- Semiconductor outputs signal:
  - Switch status channel 1/2
  - Supply voltage is present
- Plug-in connection terminals (either spring-loaded terminal or screw terminal)
- See order reference for unit types

Unit description

The safety relay meets the requirements of EN 60947-5-1, EN 60204-1 and VDE 0113-1 and may be used in applications with

- E-STOP pushbuttons
- Safety gates

Safety features

The relay meets the following safety requirements:

- The circuit is redundant with built-in self-monitoring.
- The safety function remains effective in the case of a component failure.
- The correct opening and closing of the safety function relays is tested automatically in each on-off cycle.
- The tranformer is short circuit-proof. An electronic fuse is used on a DC supply.

Block diagram

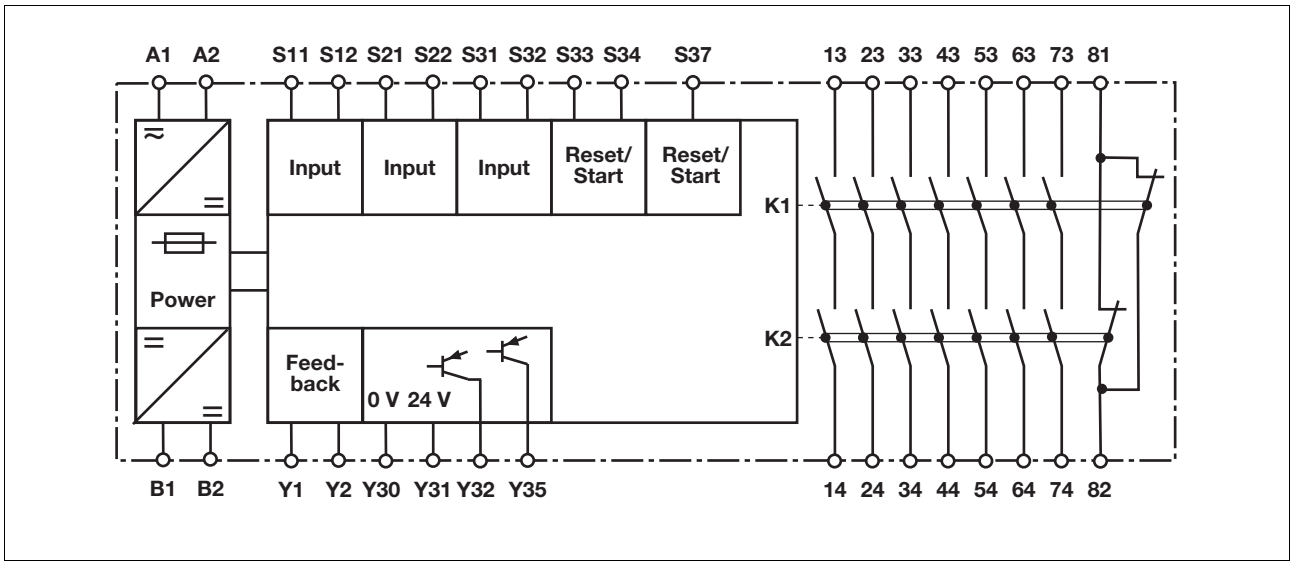

Pilz GmbH & Co. KG, Felix-Wankel-Straße 2, 73760 Ostfildern, Germany
Telephone: +49 711 3409-0, Telefax: +49 711 3409-133, E-Mail: pilz.gmbh@pilz.de

1001993-EN-03-2011-11

Up to PL e of EN ISO 13849-1
PNOZ X11P

Function description

- Single-channel operation: no redundancy in the input circuit, earth faults in the reset and input circuit are detected.
- Dual-channel operation with detection of shorts across contacts: redundant input circuit, detects
  - earth faults in the reset and input circuit,
  - short circuits in the input circuit and, with a monitored reset, in the reset circuit too,
  - shorts between contacts in the input circuit.
- Automatic start: Unit is active once the input circuit has been closed.
- Manual reset: Unit is active once the input circuit is closed and then the reset circuit is closed.
- Monitored reset: Unit is active once
  - the input circuit is closed and then the reset circuit is closed and opened again.
  - the reset circuit is closed and then opened again once the input circuit is closed.
- Increase in the number of available instantaneous safety contacts by connecting contact expansion modules or external contactors.

Timing diagram

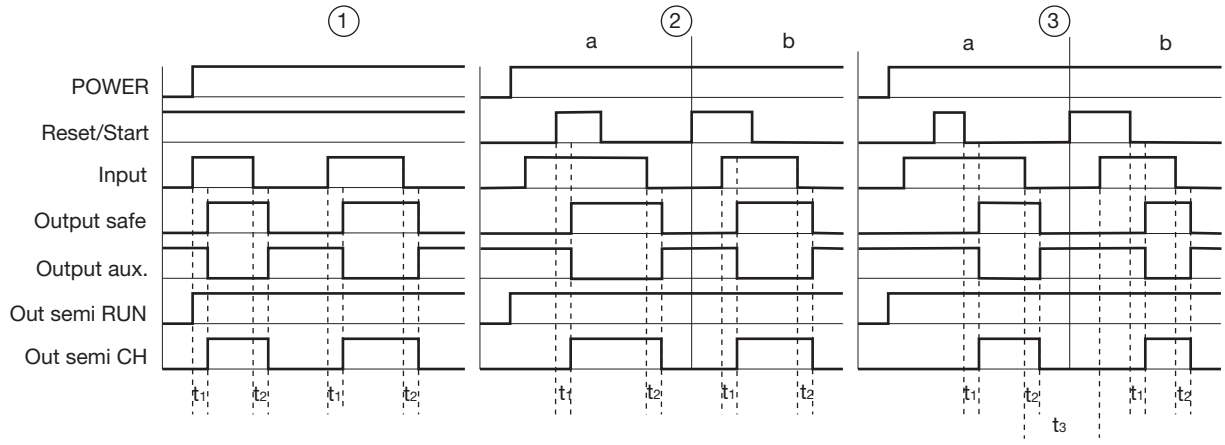

Key

- Power: Supply voltage
- Reset/Start: Reset circuit S33-S34, S37
- Input: Input circuits S11-S12, S21-S22, S31-S32
- Output safe: Safety contacts 13-14, 23-24, 33-34, 43-44, 53-54, 63-64, 73-74
- Output aux: Auxiliary contacts 81-82
- Out semi RUN: Semiconductor output supply voltage Y35
- Out semi CH: Semiconductor output switch status Y32
- ①: Automatic reset
- ②: Manual reset
- ③: Monitored reset
- a: Input circuit closes before reset circuit
- b: Reset circuit closes before input circuit
- t_1: Switch-on delay
- t_2: Delay-on de-energisation
- t_3: Recovery time

Wiring

Please note:

- Information given in the “Technical details” must be followed.
- Outputs 13-14, 23-24, 33-34, 43-44, 53-54, 63-64, 73-74 are safety contacts, output 81-82 is an auxiliary contact (e.g. for display).
- To prevent contact welding, a fuse should be connected before the output contacts (see technical details).
- Calculation of the max. cable runs I_{max} in the input circuit:

$$I_{max} = \frac{R_{lmax}}{R_l / km}$$

R_{lmax} = max. overall cable resistance (see technical details)
R_l /km = cable resistance/km

- Use copper wire that can withstand 60/75 °C.
- Sufficient fuse protection must be provided on all output contacts with capacitive and inductive loads.

Pilz GmbH & Co. KG, Felix-Wankel-Straße 2, 73760 Ostfildern, Germany
Telephone: +49 711 3409-0, Telefax: +49 711 3409-133, E-Mail: pilz.gmbh@pilz.de

Up to PL e of EN ISO 13849-1
PNOZ X11P

Preparing for operation

- Supply voltage

Supply voltage	AC	DC
	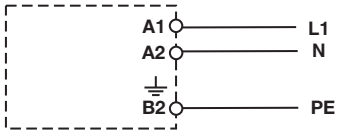	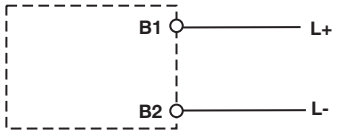

- Input circuit

Input circuit	Single-channel	Dual-channel
E-STOP **without** detection of shorts across contacts	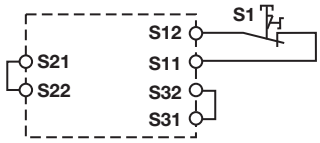	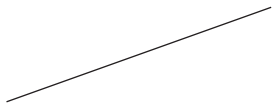
E-STOP **with** detection of shorts across contacts	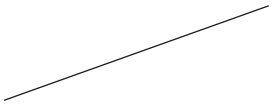	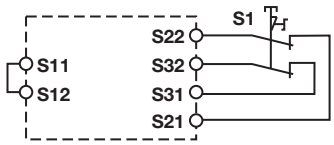
Safety gate **without** detection of shorts across contacts	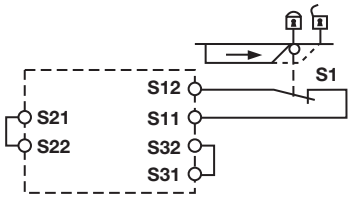	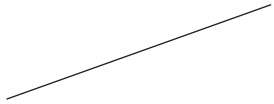
Safety gate **with** detection of shorts across contacts		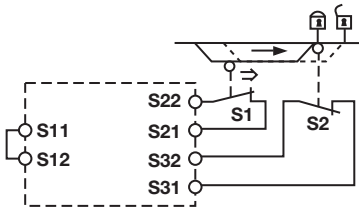

Pilz GmbH & Co. KG, Felix-Wankel-Straße 2, 73760 Ostfildern, Germany
Telephone: +49 711 3409-0, Telefax: +49 711 3409-133, E-Mail: pilz.gmbh@pilz.de

Up to PL e of EN ISO 13849-1
PNOZ X11P

Reset circuit

Reset circuit	E-STOP wiring (single-channel) Safety gate (single-channel)	E-STOP wiring (dual-channel) Safety gate (dual-channel)
Automatic reset		
Manual reset	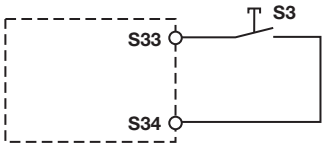	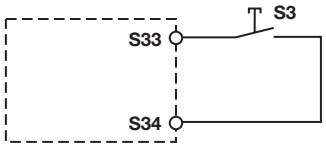
Monitored reset	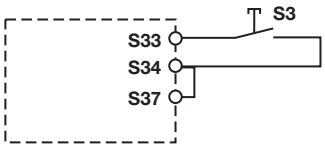	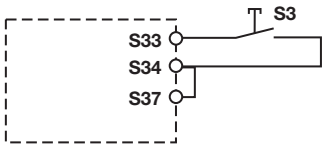

Feedback circuit

Feedback circuit	Automatic reset	Monitored reset
Contacts from external contactors	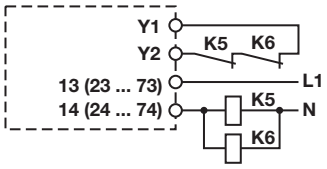	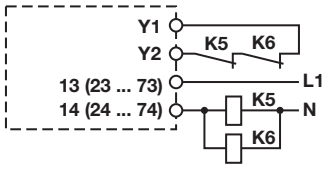

Semiconductor output

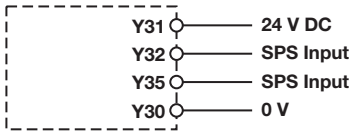

Key

S1/S2	E-STOP/safety gate switch
S3	Reset button
	Switch operated
	Gate open
	Gate closed

Up to PL e of EN ISO 13849-1
PNOZ X11P

Terminal configuration

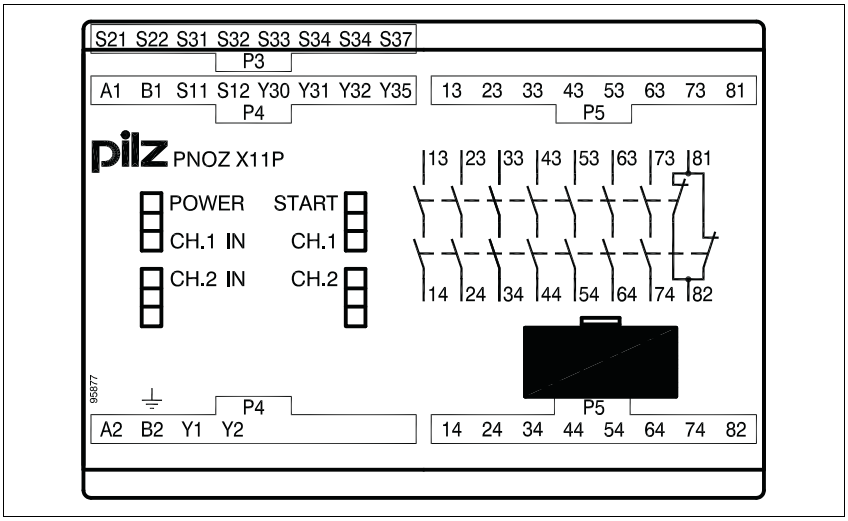

Installation

- The safety relay should be installed in a control cabinet with a protection type of at least IP54.
- Use the notch on the rear of the unit to attach it to a DIN rail.
- Ensure the unit is mounted securely on a vertical DIN rail (35 mm) by using a fixing element (e.g. retaining bracket or an end angle).

Dimensions

* with spring-loaded terminals

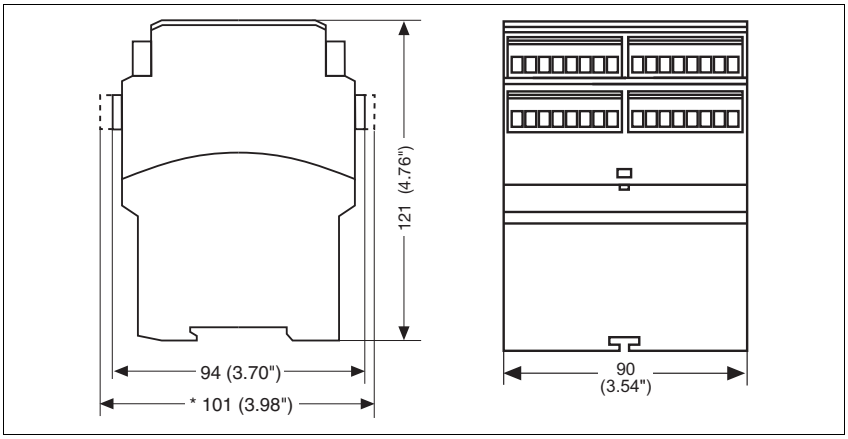

Pilz GmbH & Co. KG, Felix-Wankel-Straße 2, 73760 Ostfildern, Germany
Telephone: +49 711 3409-0, Telefax: +49 711 3409-133, E-Mail: pilz.gmbh@pilz.de

Up to PL e of EN ISO 13849-1
PNOZ X11P

Notice

This data sheet is only intended for use during configuration. Please refer to the operating manual for installation and operation.

Service life graph

The service life graphs indicate the number of cycles from which failures due to wear must be expected. The wear is mainly caused by the electrical load; the mechanical load is negligible.

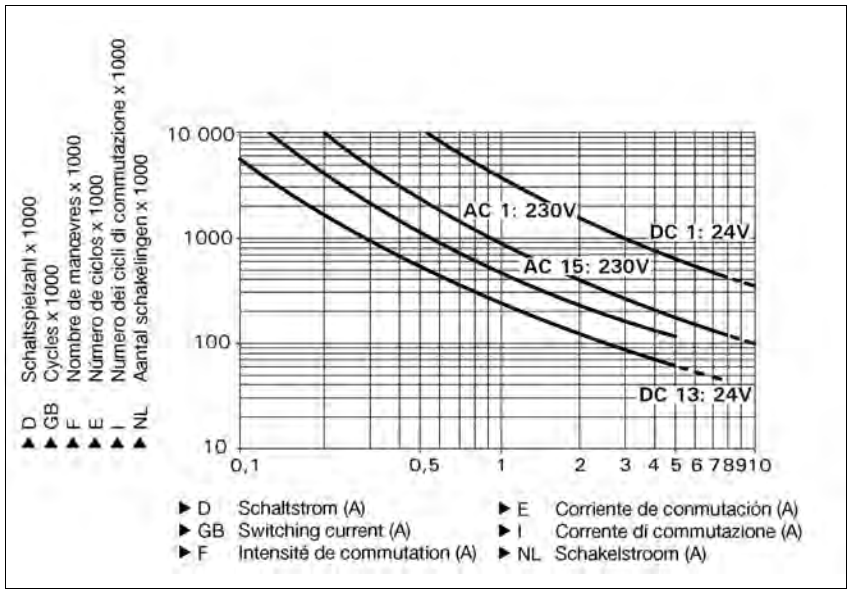

Example
- Inductive load: 0,2 A
- Utilisation category: AC15
- Contact service life: 4,000,000 cycles

Provided the application requires fewer than 4,000,000 cycles, the PFH value (see technical details) can be used in the calculation.

To increase the service life, sufficient spark suppression must be provided on all output contacts. With capacitive loads, any power surges that occur must be noted. With contactors, use freewheel diodes for spark suppression.

Technical details

Electrical data	
Supply voltage	
Supply voltage U_B AC	**24 V**, **110 - 120 V**, **230 - 240 V**
Supply voltage U_B DC	**24 V**
Voltage tolerance	**-15 %/+10 %**
Power consumption at U_B AC	**9.0 VA**
Power consumption at U_B DC	**3.5 W**
Frequency range AC	**50 - 60 Hz**
Residual ripple DC	**160 %**
Voltage and current at	
Input circuit DC: **24.0 V**	**50.0 mA**
Reset circuit DC: **24.0 V**	**70.0 mA**
Feedback loop DC: **24.0 V**	**70.0 mA**

Up to PL e of EN ISO 13849-1
PNOZ X11P

Electrical data	
Number of output contacts	
Safety contacts (S) instantaneous:	**7**
Auxiliary contacts (N/C):	**1**
Utilisation category in accordance with **EN 60947-4-1**	
Safety contacts: AC1 at **240 V**	I_{min}: **0.01 A** , I_{max}: **8.0 A** P_{max}: **2000 VA**
Safety contacts: DC1 at **24 V**	I_{min}: **0.01 A** , I_{max}: **8.0 A** P_{max}: **200 W**
Auxiliary contacts: AC1 at **240 V**	I_{min}: **0.01 A** , I_{max}: **8.0 A** P_{max}: **2000 VA**
Auxiliary contacts: DC1 at **24 V**	I_{min}: **0.01 A** , I_{max}: **8.0 A** P_{max}: **200 W**
Utilisation category in accordance with **EN 60947-5-1**	
Safety contacts: AC15 at **230 V**	I_{max}: **5.0 A**
Safety contacts: DC13 at **24 V** (6 cycles/min)	I_{max}: **7.0 A**
Auxiliary contacts: AC15 at **230 V**	I_{max}: **5.0 A**
Auxiliary contacts: DC13 at **24 V** (6 cycles/min)	I_{max}: **7.0 A**
Contact material	**AgSnO2 + 0.2 µm Au**
External contact fuse protection (I_K = 1 kA) to **EN 60947-5-1**	
Blow-out fuse, quick	
Safety contacts:	**10 A**
Auxiliary contacts:	**10 A**
Blow-out fuse, slow	
Safety contacts:	**6 A**
Auxiliary contacts:	**6 A**
Circuit breaker 24 VAC/DC, characteristic B/C	
Safety contacts:	**6 A**
Auxiliary contacts:	**6 A**
Semiconductor outputs (short circuit proof)	**24.0 V** DC, **20 mA**
External supply voltage	**24.0 V** DC
Voltage tolerance	**-20 %/+20 %**
Max. overall cable resistance R_{lmax} input circuits, reset circuits	
single-channel at U_B DC	**50 Ohm**
single-channel at U_B AC	**100 Ohm**
dual-channel with detect. of shorts across contacts at U_B DC	**15 Ohm**
dual-channel with detect. of shorts across contacts at U_B AC	**20 Ohm**
Min. input resistance when switching on	**43 Ohm**
Safety-related characteristic data	
PL in accordance with **EN ISO 13849-1: 2006**	**PL e** (**Cat. 4**)
Category in accordance with **EN 954-1**	**Cat. 4**
SIL CL in accordance with **EN IEC 62061**	**SIL CL 3**
PFH in accordance with **EN IEC 62061**	**2.31E-09**
SIL in accordance with **IEC 61511**	**SIL 3**
PFD in accordance with **IEC 61511**	**2.03E-06**
T_M [year] in accordance with **EN ISO 13849-1: 2006**	**20**
Times	
Switch-on delay	
with automatic reset typ.	**450 ms**
with automatic reset max.	**680 ms**
with automatic reset after power on typ.	**450 ms**
with automatic reset after power on max.	**630 ms**
with manual reset typ.	**450 ms**
with manual reset max.	**680 ms**
on monitored reset with rising edge typ.	**390 ms**
on monitored reset with rising edge max.	**550 ms**

Pilz GmbH & Co. KG, Felix-Wankel-Straße 2, 73760 Ostfildern, Germany
Telephone: +49 711 3409-0, Telefax: +49 711 3409-133, E-Mail: pilz.gmbh@pilz.de

Up to PL e of EN ISO 13849-1
PNOZ X11P

Times	
Delay-on de-energisation	
with E-STOP typ.	**17 ms**
with E-STOP max.	**30 ms**
with power failure typ.	**40 ms**
with power failure max.	**60 ms**
Recovery time at max. switching frequency 1/s	
after E-STOP	**50 ms**
after power failure	**100 ms**
Min. start pulse duration with a monitored reset	
with rising edge	**30 ms**
Simultaneity, channel 1 and 2	∞
Supply interruption before de-energisation	**20 ms**
Environmental data	
EMC	**EN 60947-5-1**, **EN 61000-6-2**
Vibration to **EN 60068-2-6**	
Frequency	**10 - 55 Hz**
Amplitude	**0.35 mm**
Climatic suitability	**EN 60068-2-78**
Airgap creepage in accordance with **EN 60947-1**	
Pollution degree	**2**
Overvoltage category	**III**
Rated insulation voltage	**250 V**
Rated impulse withstand voltage	**4.00 kV**
Ambient temperature	**-10 - 55 °C**
Storage temperature	**-40 - 85 °C**
Protection type	
Mounting (e.g. cabinet)	**IP54**
Housing	**IP40**
Terminals	**IP20**
Mechanical data	
Housing material	
Housing	**PPO UL 94 V0**
Front	**ABS UL 94 V0**
Cross section of external conductors with screw terminals	
1 core flexible	**0.25 - 2.50 mm² , 24 - 12 AWG** No. 777080, 777083, 777086
2 core, same cross section, flexible:	
with crimp connectors, without insulating sleeve	**0.25 - 1.00 mm² , 24 - 16 AWG** No. 777080, 777083, 777086
without crimp connectors or with TWIN crimp connectors	**0.20 - 1.50 mm² , 24 - 16 AWG** No. 777080, 777083, 777086
Torque setting with screw terminals	**0.50 Nm** No. 777080, 777083, 777086
Cross section of external conductors with spring-loaded terminals: Flexible with/without crimp connectors	**0.20 - 1.50 mm² , 24 - 16 AWG** No. 787080, 787083, 787086
Spring-loaded terminals: Terminal points per connection	**2** No. 787080, 787083, 787086
Stripping length	**8 mm** No. 787080, 787083, 787086
Dimensions	
Height	**101.0 mm** No. 787080, 787083, 787086 **94.0 mm** No. 777080, 777083, 777086
Width	**90.0 mm**
Depth	**121.0 mm**
Weight	**630 g** No. 787080, 787083, 787086 **640 g** No. 777080, 777083, 777086

No. stands for order number.

Up to PL e of EN ISO 13849-1
PNOZ X11P

It is essential to consider the relay's service life graphs. The relay outputs' safety-related characteristic data is only valid if the values in the service life graphs are met.

The PFH value depends on the switching frequency and the load on the relay output.
If the service life graphs are not accessible, the stated PFH value can be used irrespective of the switching frequency and the load, as the PFH value already considers the relay's B10d value as well as the failure rates of the other components.

All the units used within a safety function must be considered when calculating the safety characteristic data.

INFORMATION
A safety function's SIL/PL values are **not** identical to the SIL/PL values of the units that are used and may be different. We recommend that you use the PAScal software tool to calculate the safety function's SIL/PL values.

The standards current on **2009-11** apply.

Conventional thermal current while loading several contacts

Number of contacts	I_{th} per contact at U_B DC	I_{th} at U_B AC
1	**8.00 A**	**8.00 A**
2	**8.00 A**	**8.00 A**
3	**8.00 A**	**6.80 A**
4	**7.20 A**	**5.90 A**
5	**6.50 A**	**5.30 A**
6	**5.90 A**	**4.80 A**
7	**5.50 A**	**4.50 A**

Order reference

Type	Features		Terminals	Order no.
PNOZ X11P C	24 VAC/DC		Spring-loaded terminals	787 080
PNOZ X11P	24 VAC/DC		Screw terminals	777 080
PNOZ X11P C	110 - 120 VAC	24 VDC	Spring-loaded terminals	787 083
PNOZ X11P	110 - 120 VAC	24 VDC	Screw terminals	777 083
PNOZ X11P C	230 - 240 VAC	24 VDC	Spring-loaded terminals	787 086
PNOZ X11P	230 - 240 VAC	24 VDC	Screw terminals	777 086

Pilz GmbH & Co. KG, Felix-Wankel-Straße 2, 73760 Ostfildern, Germany
Telephone: +49 711 3409-0, Telefax: +49 711 3409-133, E-Mail: pilz.gmbh@pilz.de

Up to PL e of EN ISO 13849-1
PNOZ XV1P



Safety relay for monitoring E-STOP pushbuttons and safety gates.

Approvals

	PNOZ XV1P
c UL us LISTED	◆
TÜV SÜD	◆
CCC	◆

Unit features

- Positive-guided relay outputs:
  - 2 safety contacts (N/O), instantaneous
  - 1 safety contact (N/O), delay-on de-energisation
- Connection options for:
  - E-STOP pushbutton
  - Safety gate limit switch
  - Reset button
  - Light barriers
- LED indicator for:
  - Switch status channel 1/2
  - Supply voltage
- Plug-in connection terminals (either spring-loaded terminal or screw terminal)
- See order reference for unit types

Unit description

The max. category the safety contacts can achieve in accordance with EN 954-1 and EN ISO 13849-1 is stated in the technical details.
The safety relay meets the requirements of EN 60947-5-1, EN 60204-1 and VDE 0113-1 and may be used in applications with

- E-STOP pushbuttons
- Safety gates
- Light beam devices

Safety features

The relay meets the following safety requirements:

- The circuit is redundant with built-in self-monitoring.
- The safety function remains effective in the case of a component failure.
- The correct opening and closing of the safety function relays is tested automatically in each on-off cycle.
- The unit has an electronic fuse.

Block diagram

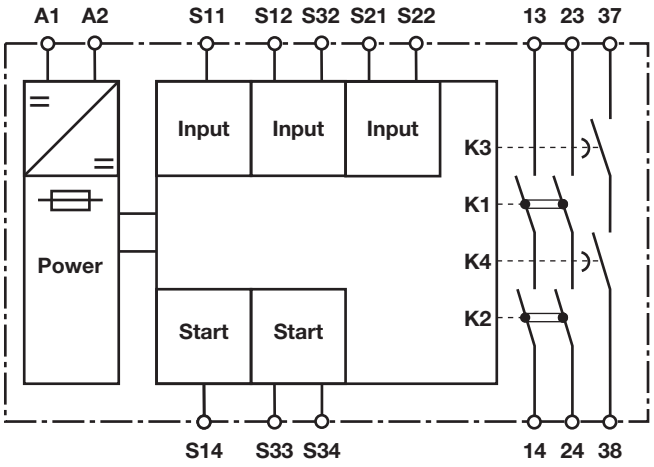

Pilz GmbH & Co. KG, Felix-Wankel-Straße 2, 73760 Ostfildern, Germany
Telephone: +49 711 3409-0, Telefax: +49 711 3409-133, E-Mail: pilz.gmbh@pilz.de

Up to PL e of EN ISO 13849-1
PNOZ XV1P

Function description

- Single-channel operation: no redundancy in the input circuit, earth faults in the reset and input circuit are detected.
- Dual-channel operation with detection of shorts across contacts: redundant input circuit, detects
  - earth faults in the reset and input circuit,
  - short circuits in the input circuit and, with a monitored reset, in the reset circuit too,
  - shorts between contacts in the input circuit.
- Dual-channel operation without detection of shorts across contacts: redundant input circuit, detects
  - earth faults in the reset and input circuit,
  - short circuits in the input circuit and, with a monitored reset, in the reset circuit too.
- Automatic start: Unit is active once the input circuit has been closed.
- Monitored reset: Unit is active once the input circuit is closed and once the reset circuit is closed after the waiting period has elapsed (see technical details).
- Increase in the number of available instantaneous safety contacts by connecting contact expansion modules or external contactors.

Timing diagram

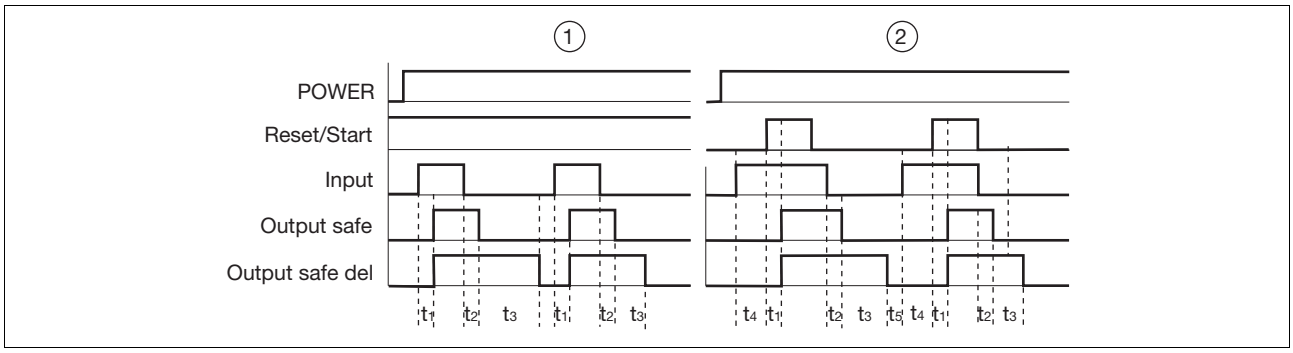

Key

- Power: Supply voltage
- Reset/Start: Reset circuit S11-S14, S33-S34
- Input: Input circuits S11-S12, S12-S32, S21-S22
- Output safe: Safety contacts, instantaneous 13-14, 23-24
- Output safe del: Safety contacts, delayed 37-38
- ①: Automatic reset
- ②: Monitored reset
- t_1: Switch-on delay
- t_2: Delay-on de-energisation
- t_3: Delay time
- t_4: Waiting period
- t_5: Recovery time

Wiring

Please note:

- Information given in the “Technical details” must be followed.
- Outputs 37-38 are delay-on de-energisation safety contacts.
- To prevent contact welding, a fuse should be connected before the output contacts (see technical details).
- Calculation of the max. cable runs I_{max} in the input circuit:

$$I_{max} = \frac{R_{lmax}}{R_l / km}$$

R_{lmax} = max. overall cable resistance (see technical details)
R_l / km = cable resistance/km

- Use copper wire that can withstand 60/75 °C.
- Sufficient fuse protection must be provided on all output contacts with capacitive and inductive loads.

Pilz GmbH & Co. KG, Felix-Wankel-Straße 2, 73760 Ostfildern, Germany
Telephone: +49 711 3409-0, Telefax: +49 711 3409-133, E-Mail: pilz.gmbh@pilz.de
1002010-EN-02-2011-11

Up to PL e of EN ISO 13849-1
PNOZ XV1P

Preparing for operation

- Supply voltage

Supply voltage	AC	DC
		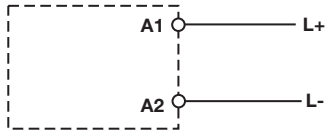

- Input circuit

Input circuit	Single-channel	Dual-channel
E-STOP **without** detection of shorts across contacts	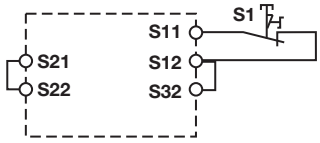	
E-STOP **with** detection of shorts across contacts		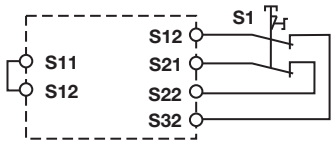
Safety gate **without** detection of shorts across contacts	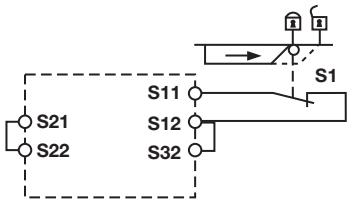	
Safety gate **with** detection of shorts across contacts		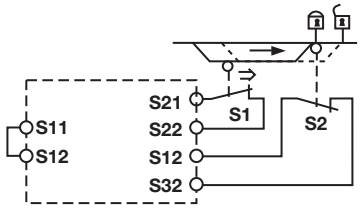
Light beam device **with** detection of shorts across contacts via ESPE		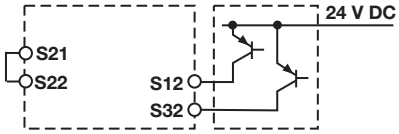

Up to PL e of EN ISO 13849-1
PNOZ XV1P

▸ Reset circuit

Reset circuit	E-STOP wiring, safety gate	Safety gate (dual-channel)
Automatic reset		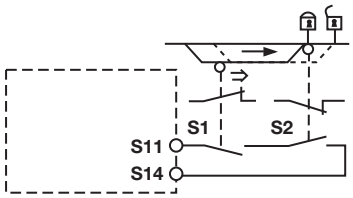
Monitored reset	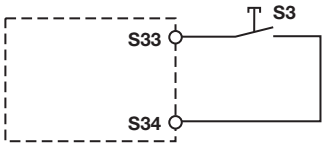	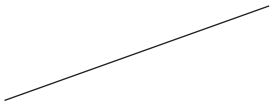

▸ Feedback circuit

Feedback circuit	Automatic reset	Monitored reset
Contacts from external contactors	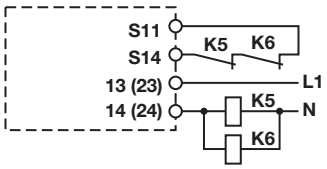	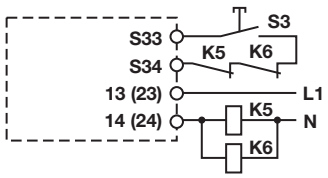

▸ Key

S1/S2	E-STOP/safety gate switch
S3	Reset button
	Switch operated
	Gate open
	Gate closed

2.2

Pilz GmbH & Co. KG, Felix-Wankel-Straße 2, 73760 Ostfildern, Germany
Telephone: +49 711 3409-0, Telefax: +49 711 3409-133, E-Mail: pilz.gmbh@pilz.de

Up to PL e of EN ISO 13849-1
PNOZ XV1P

Terminal configuration

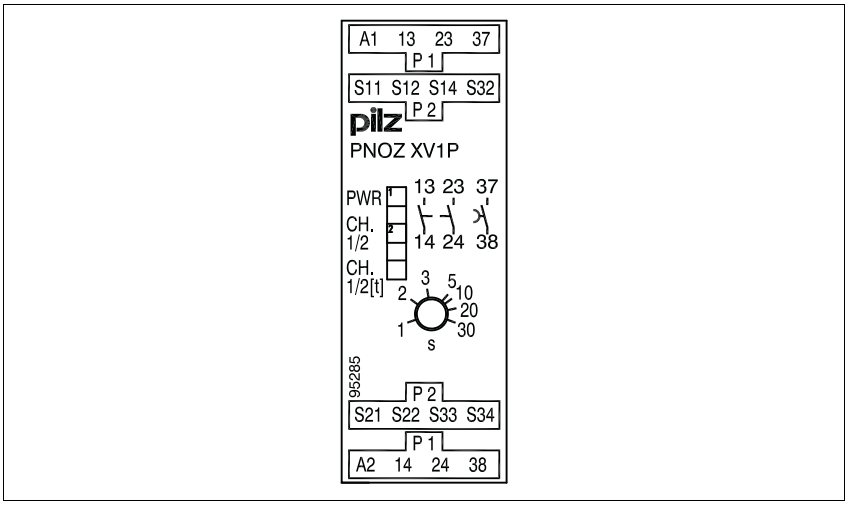

Installation

- The safety relay should be installed in a control cabinet with a protection type of at least IP54.
- Use the notch on the rear of the unit to attach it to a DIN rail.
- Ensure the unit is mounted securely on a vertical DIN rail (35 mm) by using a fixing element (e.g. retaining bracket or an end angle).

Dimensions

* with spring-loaded terminals

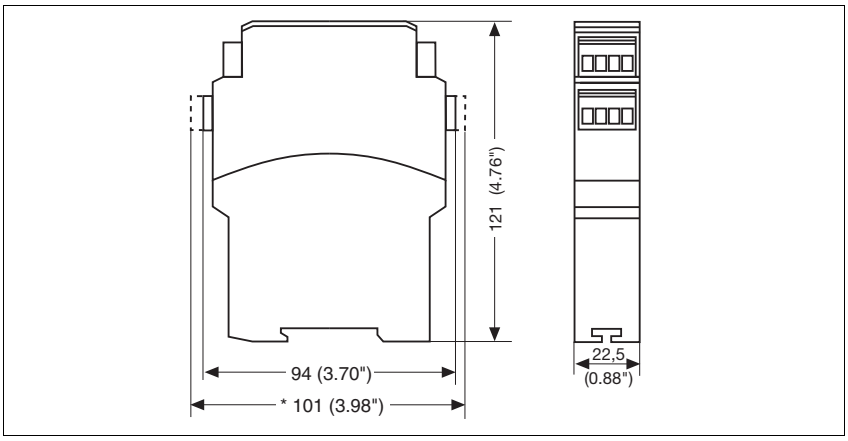

Up to PL e of EN ISO 13849-1
PNOZ XV1P

Notice

This data sheet is only intended for use during configuration. Please refer to the operating manual for installation and operation.

Service life graph

The service life graphs indicate the number of cycles from which failures due to wear must be expected. The wear is mainly caused by the electrical load; the mechanical load is negligible.

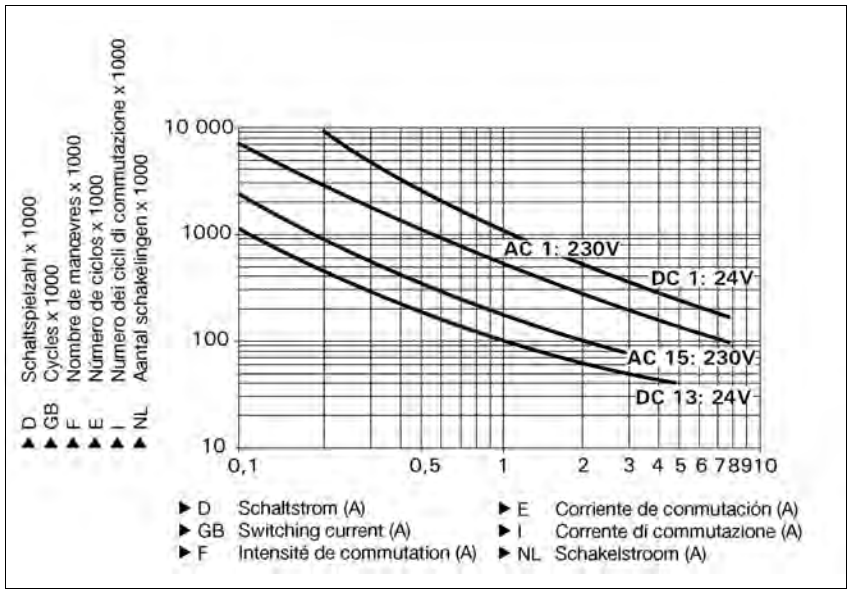

Example
- Inductive load: 0,2 A
- Utilisation category: AC15
- Contact service life: 900 000 cycles

Provided the application requires fewer than 900 000 cycles, the PFH value (see technical details) can be used in the calculation.

To increase the service life, sufficient spark suppression must be provided on all output contacts. With capacitive loads, any power surges that occur must be noted. With contactors, use freewheel diodes for spark suppression.

Technical details

Electrical data	
Supply voltage	
Supply voltage U_B DC	**24 V**
Voltage tolerance	**-15 %/+10 %**
Power consumption at U_B DC	**3.5 W**
Residual ripple DC	**20 %**
Voltage and current at	
Input circuit DC: **24.0 V**	**35.0 mA**
Reset circuit DC: **24.0 V**	**35.0 mA**
Feedback loop DC: **24.0 V**	**3.5 mA**
Number of output contacts	
Safety contacts (S) instantaneous:	**2**
Safety contacts (N/O), delayed:	**1**

Pilz GmbH & Co. KG, Felix-Wankel-Straße 2, 73760 Ostfildern, Germany
Telephone: +49 711 3409-0, Telefax: +49 711 3409-133, E-Mail: pilz.gmbh@pilz.de

Up to PL e of EN ISO 13849-1
PNOZ XV1P

Electrical data	
Utilisation category in accordance with **EN 60947-4-1**	
Safety contacts: AC1 at **240 V**	I_{min}: **0.01 A** , I_{max}: **5.0 A** P_{max}: **1250 VA**
Safety contacts: DC1 at **24 V**	I_{min}: **0.01 A** , I_{max}: **5.0 A** P_{max}: **125 W**
Safety contacts, delayed: AC1 at **240 V**	I_{min}: **0.01 A** , I_{max}: **5.0 A** P_{max}: **1250 VA**
Safety contacts, delayed: DC1 at **24 V**	I_{min}: **0.01 A** , I_{max}: **5.0 A** P_{max}: **125 W**
Utilisation category in accordance with **EN 60947-5-1**	
Safety contacts: AC15 at **230 V**	I_{max}: **1.5 A**
Safety contacts: DC13 at **24 V** (6 cycles/min)	I_{max}: **2.0 A**
Safety contacts, delayed: AC15 at **230 V**	I_{max}: **2.0 A**
Safety contacts, delayed: DC13 at **24 V** (6 cycles/min)	I_{max}: **4.0 A**
Contact material	**AgSnO2 + 0.2 µm Au**
External contact fuse protection (I_K = 1 kA) to **EN 60947-5-1**	
Blow-out fuse, quick	
Safety contacts:	**6 A**
Safety contacts, delayed:	**6 A**
Blow-out fuse, slow	
Safety contacts:	**4 A**
Safety contacts, delayed:	**4 A**
Circuit breaker 24 VAC/DC, characteristic B/C	
Safety contacts:	**4 A**
Safety contacts, delayed:	**4 A**
Max. overall cable resistance R_{lmax} input circuits, reset circuits	
single-channel at U_B DC	**100 Ohm**
dual-channel without detect. of shorts across contacts at U_B DC	**150 Ohm**
dual-channel with detect. of shorts across contacts at U_B DC	**15 Ohm**
Safety-related characteristic data	
PL in accordance with **EN ISO 13849-1: 2006**	
Safety contacts, instantaneous	**PL e** (**Cat. 4**)
Safety contacts, delayed <30 s	**PL d** (**Cat. 3**)
Safety contacts, delayed ≥30 s	**PL c** (**Cat. 1**)
Category in accordance with **EN 954-1**	
Safety contacts, instantaneous	**Cat. 4**
Safety contacts, delayed <30 s	**Cat. 3**
Safety contacts, delayed ≥30 s	**Cat. 1**
SIL CL in accordance with **EN IEC 62061**	
Safety contacts, instantaneous	**SIL CL 3**
Safety contacts, delayed <30 s	**SIL CL 3**
Safety contacts, delayed ≥30 s	**SIL CL 1**
PFH in accordance with **EN IEC 62061**	
Safety contacts, instantaneous	**2.31E-09**
Safety contacts, delayed <30 s	**2.64E-09**
Safety contacts, delayed ≥30 s	**2.87E-09**
SIL in accordance with **IEC 61511**	
Safety contacts, instantaneous	**SIL 3**
Safety contacts, delayed <30 s	**SIL 3**
Safety contacts, delayed ≥30 s	**SIL 2**
PFD in accordance with **IEC 61511**	
Safety contacts, instantaneous	**2.03E-06**
Safety contacts, delayed <30 s	**1.26E-05**
Safety contacts, delayed ≥30 s	**4.64E-05**
T_M [year] in accordance with **EN ISO 13849-1: 2006**	**20**

Up to PL e of EN ISO 13849-1
PNOZ XV1P

Times	
Switch-on delay	
with automatic reset typ.	**300 ms**
with automatic reset max.	**550 ms**
with automatic reset after power on typ.	**350 ms**
with automatic reset after power on max.	**750 ms**
on monitored reset with rising edge typ.	**30 ms**
on monitored reset with rising edge max.	**60 ms**
Delay-on de-energisation	
with E-STOP typ.	**15 ms**
with E-STOP max.	**30 ms**
with power failure typ.	**100 ms**
with power failure max.	**150 ms**
Recovery time at max. switching frequency 1/s	
after E-STOP	**50 ms +tv**
after power failure	**300 ms**
Repetition accuracy	**2 %**
Time accuracy	**-20 %/+20 %**
Waiting period with a monitored reset	
with rising edge	**300 ms**
Min. start pulse duration with a monitored reset	
with rising edge	**30 ms**
Simultaneity, channel 1 and 2	∞
Supply interruption before de-energisation	**20 ms**
Environmental data	
EMC	**EN 60947-5-1**, **EN 61000-6-2**, **EN 61000-6-3**
Vibration to **EN 60068-2-6**	
Frequency	**10 - 55 Hz**
Amplitude	**0.35 mm**
Climatic suitability	**EN 60068-2-78**
Airgap creepage in accordance with **EN 60947-1**	
Pollution degree	**2**
Overvoltage category	**III**
Rated insulation voltage	**250 V**
Rated impulse withstand voltage	**4.00 kV**
Ambient temperature	**-10 - 55 °C**
Storage temperature	**-40 - 85 °C**
Protection type	
Mounting (e.g. cabinet)	**IP54**
Housing	**IP40**
Terminals	**IP20**
Mechanical data	
Housing material	
Housing	**PPO UL 94 V0**
Front	**ABS UL 94 V0**
Cross section of external conductors with screw terminals	
1 core flexible	**0.25 - 2.50 mm² , 24 - 12 AWG** No. 777601, 777602
2 core, same cross section, flexible:	
with crimp connectors, without insulating sleeve	**0.25 - 1.00 mm² , 24 - 16 AWG** No. 777601, 777602
without crimp connectors or with TWIN crimp connectors	**0.20 - 1.50 mm² , 24 - 16 AWG** No. 777601, 777602
Torque setting with screw terminals	**0.50 Nm** No. 777601, 777602
Cross section of external conductors with spring-loaded terminals: Flexible with/without crimp connectors	**0.20 - 1.50 mm² , 24 - 16 AWG** No. 787601, 787602
Spring-loaded terminals: Terminal points per connection	**2** No. 787601, 787602
Stripping length	**8 mm** No. 787601, 787602

Pilz GmbH & Co. KG, Felix-Wankel-Straße 2, 73760 Ostfildern, Germany
Telephone: +49 711 3409-0, Telefax: +49 711 3409-133, E-Mail: pilz.gmbh@pilz.de

Up to PL e of EN ISO 13849-1
PNOZ XV1P

Mechanical data	
Dimensions	
Height	**101.0 mm** No. 787601, 787602 **94.0 mm** No. 777601, 777602
Width	**22.5 mm**
Depth	**121.0 mm**
Weight	**225 g** No. 787601, 787602 **230 g** No. 777601, 777602

No. stands for order number.

It is essential to consider the relay's service life graphs. The relay outputs' safety-related characteristic data is only valid if the values in the service life graphs are met.

The PFH value depends on the switching frequency and the load on the relay output.
If the service life graphs are not accessible, the stated PFH value can be used irrespective of the switching frequency and the load, as the PFH value already considers the relay's B10d value as well as the failure rates of the other components.

All the units used within a safety function must be considered when calculating the safety characteristic data.

INFORMATION
A safety function's SIL/PL values are **not** identical to the SIL/PL values of the units that are used and may be different. We recommend that you use the PAScal software tool to calculate the safety function's SIL/PL values.

The standards current on **2003-09** apply.

Conventional thermal current while loading several contacts

Number of contacts	I_{th} per contact at U_B DC
1	**5.00 A**
2	**3.70 A**
3	**3.00 A**

Order reference

Type	Features			Terminals	Order no.
PNOZ XV1P		24 VDC	3 s selectable	Screw terminals	777 601
PNOZ XV1P C		24 VDC	3 s selectable	Spring-loaded terminals	787 601
PNOZ XV1P		24 VDC	30 s selectable	Screw terminals	777 602
PNOZ XV1P C		24 VDC	30 s selectable	Spring-loaded terminals	787 602

Pilz GmbH & Co. KG, Felix-Wankel-Straße 2, 73760 Ostfildern, Germany
Telephone: +49 711 3409-0, Telefax: +49 711 3409-133, E-Mail: pilz.gmbh@pilz.de

Up to PL e of EN ISO 13849-1
PNOZ XV2P

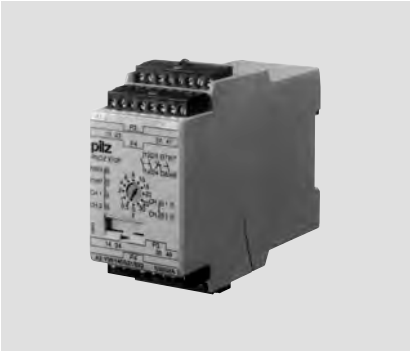

Safety relay for monitoring E-STOP pushbuttons and safety gates.

Approvals

	PNOZ XV2P
c UL us LISTED	◆
TÜV SÜD	◆
CCC	◆

Unit features

- Positive-guided relay outputs:
  - 2 safety contacts (N/O), instantaneous
  - 2 safety contacts (N/O), delay-on de-energisation
- Connection options for:
  - E-STOP pushbutton
  - Safety gate limit switch
  - Reset button
- Delay-on de-energisation, fixed or adjustable
- Delay time can be cancelled via reset button
- LED indicator for:
  - Switch status channel 1/2
  - Supply voltage
  - Reset circuit
- Plug-in connection terminals (either spring-loaded terminal or screw terminal)
- See order reference for unit types

Unit description

The safety relay meets the requirements of EN 60947-5-1, EN 60204-1 and VDE 0113-1 and may be used in applications with

- E-STOP pushbuttons
- Safety gates

The max. category the safety contacts can achieve in accordance with EN 954-1 and EN ISO 13849-1 is stated in the technical details.

Safety features

The relay meets the following safety requirements:

- The circuit is redundant with built-in self-monitoring.
- The safety function remains effective in the case of a component failure.
- The correct opening and closing of the safety function relays is tested automatically in each on-off cycle.
- The unit has an electronic fuse.

Block diagram

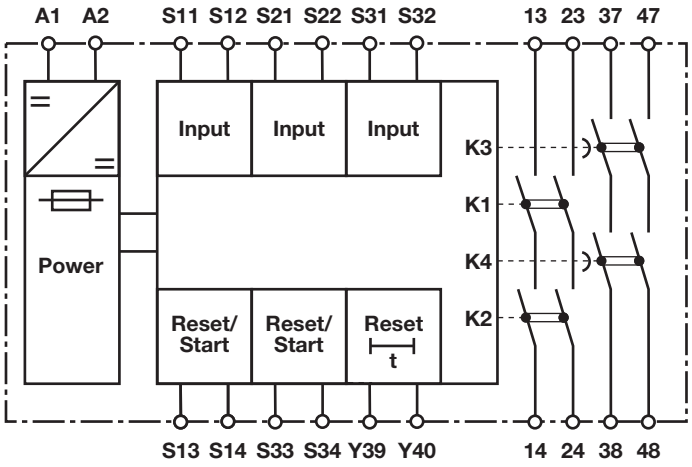

Pilz GmbH & Co. KG, Felix-Wankel-Straße 2, 73760 Ostfildern, Germany
Telephone: +49 711 3409-0, Telefax: +49 711 3409-133, E-Mail: pilz.gmbh@pilz.de

Up to PL e of EN ISO 13849-1
PNOZ XV2P

Function description

- Single-channel operation: no redundancy in the input circuit, earth faults in the reset and input circuit are detected.
- Dual-channel operation with detection of shorts across contacts: redundant input circuit, detects
  - earth faults in the reset and input circuit,
  - short circuits in the input circuit and, with a monitored reset, in the reset circuit too,
  - shorts between contacts in the input circuit.
- Automatic start: Unit is active once the input circuit has been closed.
- Monitored reset: Unit is active once the input circuit is closed and once the reset circuit is closed after the waiting period has elapsed (see technical details).
- Increase in the number of available instantaneous safety contacts by connecting contact expansion modules or external contactors.

Timing diagram

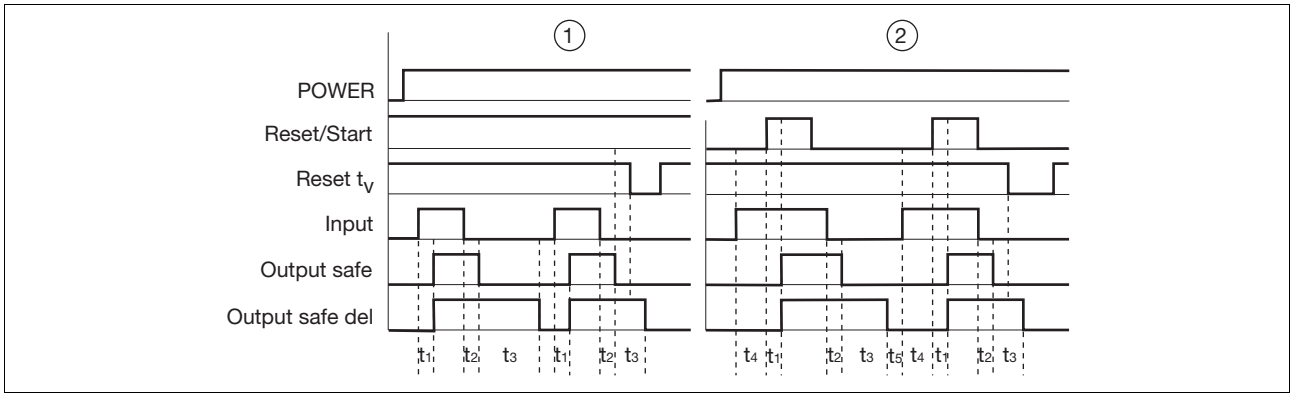

Key

- Power: Supply voltage
- Reset/Start: Reset circuit S13-S14, S33-S34
- Reset t_v: Y39-Y40
- Input: Input circuits S11-S12, S21-S22, S31-S32
- Output safe: Safety contacts, instantaneous 13-14, 23-24
- Output safe del: Safety contacts, delayed 37-38, 47-48
- ①: Automatic reset
- ②: Monitored reset
- t_1: Switch-on delay
- t_2: Delay-on de-energisation
- t_3: Delay time
- t_4: Waiting period
- t_5: Recovery time

Wiring

Please note:

- Information given in the “Technical details” must be followed.
- Outputs 13-14, 23-24 are instantaneous safety contacts, outputs 37-38, 47-48 are delay-on de-energisation safety contacts.
- To prevent contact welding, a fuse should be connected before the output contacts (see technical details).
- Calculation of the max. cable runs I_{max} in the input circuit:

$$I_{max} = \frac{R_{lmax}}{R_l / km}$$

R_{lmax} = max. overall cable resistance (see technical details)
R_l / km = cable resistance/km

- Use copper wire that can withstand 60/75 °C.
- Sufficient fuse protection must be provided on all output contacts with capacitive and inductive loads.

Up to PL e of EN ISO 13849-1
PNOZ XV2P

Preparing for operation

- Supply voltage

Supply voltage	AC	DC
		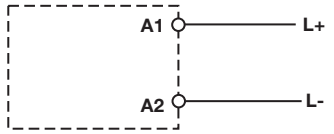

- Input circuit

Input circuit	Single-channel	Dual-channel
E-STOP **without** detection of shorts across contacts	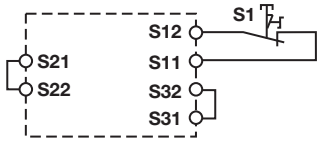	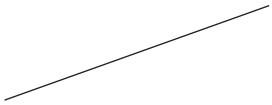
E-STOP **with** detection of shorts across contacts		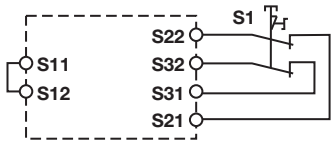
Safety gate **without** detection of shorts across contacts	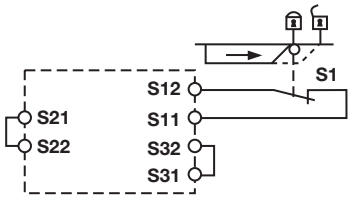	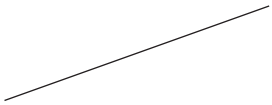
Safety gate **with** detection of shorts across contacts		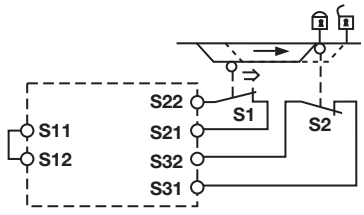

- Reset circuit

Reset circuit	E-STOP wiring (single-channel) Safety gate (single-channel)	E-STOP wiring (dual-channel) Safety gate (dual-channel)
Automatic reset		
Monitored reset	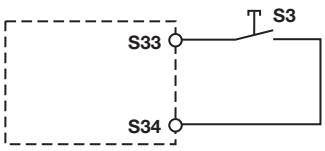	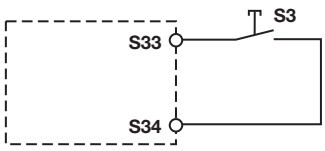

Pilz GmbH & Co. KG, Felix-Wankel-Straße 2, 73760 Ostfildern, Germany
Telephone: +49 711 3409-0, Telefax: +49 711 3409-133, E-Mail: pilz.gmbh@pilz.de

Up to PL e of EN ISO 13849-1
PNOZ XV2P

▸ Feedback circuit

Feedback circuit	Automatic reset	Monitored reset
Contacts from external contactors	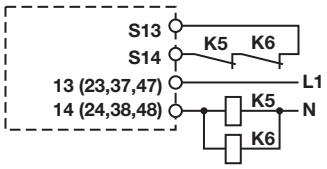	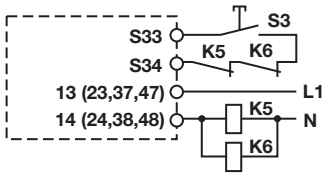

▸ Reset delay time

Reset	Without reset	With reset
Link or N/C contact		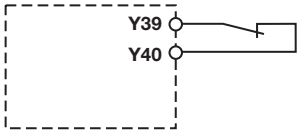

▸ Key

S1/S2	E-STOP/safety gate switch
S3	Reset button
	Switch operated
	Gate open
	Gate closed

Up to PL e of EN ISO 13849-1
PNOZ XV2P

Terminal configuration

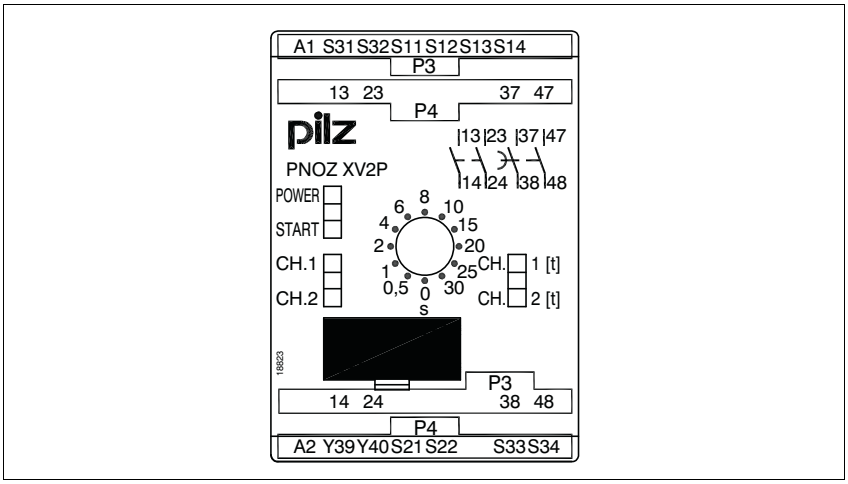

Installation

- The safety relay should be installed in a control cabinet with a protection type of at least IP54.
- Use the notch on the rear of the unit to attach it to a DIN rail.
- Ensure the unit is mounted securely on a vertical DIN rail (35 mm) by using a fixing element (e.g. retaining bracket or an end angle).

Dimensions

* with spring-loaded terminals

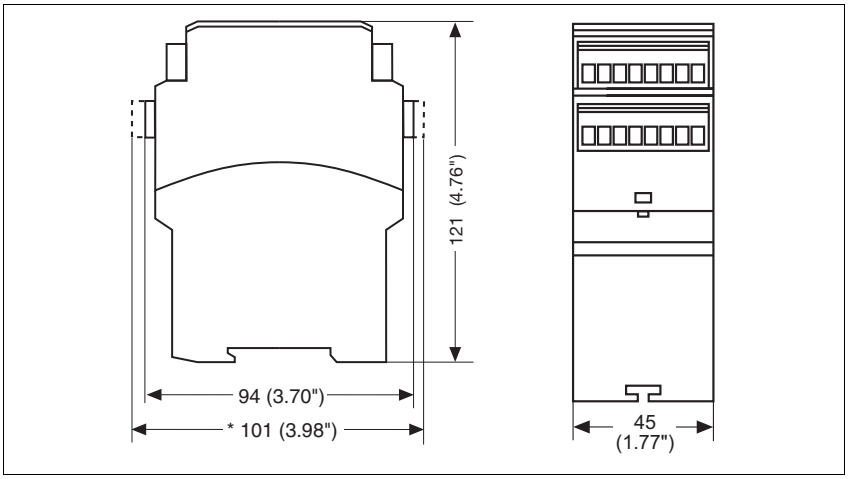

Pilz GmbH & Co. KG, Felix-Wankel-Straße 2, 73760 Ostfildern, Germany
Telephone: +49 711 3409-0, Telefax: +49 711 3409-133, E-Mail: pilz.gmbh@pilz.de

Up to PL e of EN ISO 13849-1
PNOZ XV2P

Notice

This data sheet is only intended for use during configuration. Please refer to the operating manual for installation and operation.

Service life graph

The service life graphs indicate the number of cycles from which failures due to wear must be expected. The wear is mainly caused by the electrical load; the mechanical load is negligible.

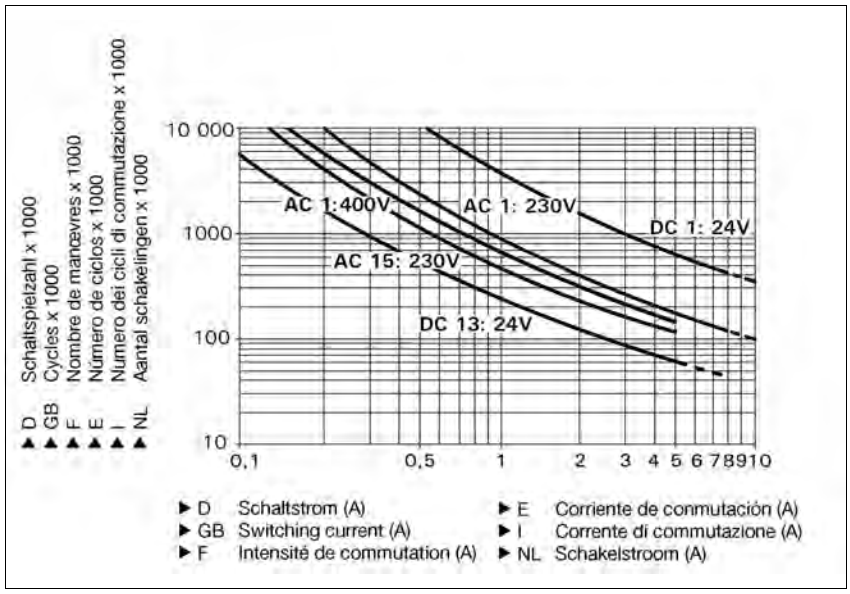

Example
- Inductive load: 0,2 A
- Utilisation category: AC15
- Contact service life: 4,000,000 cycles

Provided the application requires fewer than 4,000,000 cycles, the PFH value (see technical details) can be used in the calculation.

To increase the service life, sufficient spark suppression must be provided on all output contacts. With capacitive loads, any power surges that occur must be noted. With contactors, use freewheel diodes for spark suppression.

Technical details

Electrical data	
Supply voltage	
Supply voltage U_B DC	**24 V**
Voltage tolerance	**-15 %/+10 %**
Power consumption at U_B DC	**4.5 W**
Residual ripple DC	**160 %**
Voltage and current at	
Input circuit DC: **24.0 V**	**35.0 mA**
Reset circuit DC: **24.0 V**	**40.0 mA**
Feedback loop DC: **24.0 V**	**3.5 mA**
Number of output contacts	
Safety contacts (S) instantaneous:	**2**
Safety contacts (N/O), delayed:	**2**

Pilz GmbH & Co. KG, Felix-Wankel-Straße 2, 73760 Ostfildern, Germany
Telephone: +49 711 3409-0, Telefax: +49 711 3409-133, E-Mail: pilz.gmbh@pilz.de

Up to PL e of EN ISO 13849-1
PNOZ XV2P

Electrical data	
Utilisation category in accordance with **EN 60947-4-1**	
Safety contacts: AC1 at **240 V**	I_{min}: **0.01 A** , I_{max}: **8.0 A** P_{max}: **2000 VA**
Safety contacts: DC1 at **24 V**	I_{min}: **0.01 A** , I_{max}: **8.0 A** P_{max}: **200 W**
Safety contacts, delayed: AC1 at **240 V**	I_{min}: **0.01 A** , I_{max}: **8.0 A** P_{max}: **2000 VA**
Safety contacts, delayed: DC1 at **24 V**	I_{min}: **0.01 A** , I_{max}: **8.0 A** P_{max}: **200 W**
Utilisation category in accordance with **EN 60947-5-1**	
Safety contacts: AC15 at **230 V**	I_{max}: **5.0 A**
Safety contacts: DC13 at **24 V** (6 cycles/min)	I_{max}: **7.0 A**
Safety contacts, delayed: AC15 at **230 V**	I_{max}: **5.0 A**
Safety contacts, delayed: DC13 at **24 V** (6 cycles/min)	I_{max}: **7.0 A**
Contact material	**AgSnO2 + 0.2 µm Au**
External contact fuse protection (I_K = 1 kA) to **EN 60947-5-1**	
Blow-out fuse, quick	
Safety contacts:	**10 A**
Safety contacts, delayed:	**10 A**
Blow-out fuse, slow	
Safety contacts:	**6 A**
Safety contacts, delayed:	**6 A**
Circuit breaker 24 VAC/DC, characteristic B/C	
Safety contacts:	**6 A**
Safety contacts, delayed:	**6 A**
Max. overall cable resistance R_{lmax} input circuits, reset circuits	
single-channel at U_B DC	**100 Ohm**
dual-channel with detect. of shorts across contacts at U_B DC	**10 Ohm**
Safety-related characteristic data	
PL in accordance with **EN ISO 13849-1: 2006**	
Safety contacts, instantaneous	**PL e** (**Cat. 4**)
Safety contacts, delayed <30 s	**PL d** (**Cat. 3**)
Safety contacts, delayed ≥30 s	**PL c** (**Cat. 1**)
Category in accordance with **EN 954-1**	
Safety contacts, instantaneous	**Cat. 4**
Safety contacts, delayed <30 s	**Cat. 3**
Safety contacts, delayed ≥30 s	**Cat. 1**
SIL CL in accordance with **EN IEC 62061**	
Safety contacts, instantaneous	**SIL CL 3**
Safety contacts, delayed <30 s	**SIL CL 3**
Safety contacts, delayed ≥30 s	**SIL CL 1**
PFH in accordance with **EN IEC 62061**	
Safety contacts, instantaneous	**2.31E-09**
Safety contacts, delayed <30 s	**2.64E-09**
Safety contacts, delayed ≥30 s	**2.87E-09**
SIL in accordance with **IEC 61511**	
Safety contacts, instantaneous	**SIL 3**
Safety contacts, delayed <30 s	**SIL 3**
Safety contacts, delayed ≥30 s	**SIL 2**
PFD in accordance with **IEC 61511**	
Safety contacts, instantaneous	**2.03E-06**
Safety contacts, delayed <30 s	**1.26E-05**
Safety contacts, delayed ≥30 s	**4.64E-05**
T_M [year] in accordance with **EN ISO 13849-1: 2006**	**20**

Pilz GmbH & Co. KG, Felix-Wankel-Straße 2, 73760 Ostfildern, Germany
Telephone: +49 711 3409-0, Telefax: +49 711 3409-133, E-Mail: pilz.gmbh@pilz.de

Up to PL e of EN ISO 13849-1
PNOZ XV2P

Times	
Switch-on delay	
with automatic reset typ.	**350 ms**
with automatic reset max.	**650 ms**
with automatic reset after power on typ.	**385 ms**
with automatic reset after power on max.	**700 ms**
on monitored reset with rising edge typ.	**35 ms**
on monitored reset with rising edge max.	**70 ms**
Delay-on de-energisation	
with E-STOP typ.	**15 ms**
with E-STOP max.	**30 ms**
with power failure typ.	**85 ms**
with power failure max.	**200 ms**
Recovery time at max. switching frequency 1/s	
after E-STOP	**50 ms +tv**
after power failure	**250 ms**
Delay time t_V: selectable	**0,00 s**; **0,50 s**; **1,00 s**; **2,00 s**; **4,00 s**; **6,00 s**; **8,00 s**; **10,00 s**; **15,00 s**; **20,00 s**; **25,00 s**; **30,00 s** No. 777500 **0,10 s**; **0,20 s**; **0,30 s**; **0,40 s**; **0,50 s**; **0,60 s**; **0,70 s**; **0,80 s**; **1,00 s**; **1,50 s**; **2,00 s**; **3,00 s** No. 777502 **0,00 s**; **0,50 s**; **1,00 s**; **2,00 s**; **4,00 s**; **6,00 s**; **8,00 s**; **10,00 s**; **15,00 s**; **20,00 s**; **25,00 s**; **30,00 s** No. 787500 **0,10 s**; **0,20 s**; **0,30 s**; **0,40 s**; **0,50 s**; **0,60 s**; **0,70 s**; **0,80 s**; **1,00 s**; **1,50 s**; **2,00 s**; **3,00 s** No. 787502
Delay time t_V: fixed	**0.50 s** No. 777504, 787504 **1.00 s** No. 777503, 787503
Repetition accuracy	**2 %**
Time accuracy	**-15 %/+15 % +50 ms**
Waiting period with a monitored reset	
with rising edge	**300 ms**
Min. start pulse duration with a monitored reset	
with rising edge	**30 ms**
Simultaneity, channel 1 and 2	∞
Supply interruption before de-energisation	**20 ms**
Environmental data	
EMC	**EN 60947-5-1**, **EN 61000-6-2**
Vibration to **EN 60068-2-6**	
Frequency	**10 - 55 Hz**
Amplitude	**0.35 mm**
Climatic suitability	**EN 60068-2-78**
Airgap creepage in accordance with **EN 60947-1**	
Pollution degree	**2**
Overvoltage category	**III**
Rated insulation voltage	**250 V**
Rated impulse withstand voltage	**4.00 kV**
Ambient temperature	**-10 - 55 °C**
Storage temperature	**-40 - 85 °C**
Protection type	
Mounting (e.g. cabinet)	**IP54**
Housing	**IP40**
Terminals	**IP20**
Mechanical data	
Housing material	
Housing	**PPO UL 94 V0**
Front	**ABS UL 94 V0**

Up to PL e of EN ISO 13849-1
PNOZ XV2P

Mechanical data	
Cross section of external conductors with screw terminals	
1 core flexible	**0.25 - 2.50 mm² , 24 - 12 AWG** No. 777500, 777502, 777503, 777504
2 core, same cross section, flexible:	
with crimp connectors, without insulating sleeve	**0.25 - 1.00 mm² , 24 - 16 AWG** No. 777500, 777502, 777503, 777504
without crimp connectors or with TWIN crimp connectors	**0.20 - 1.50 mm² , 24 - 16 AWG** No. 777500, 777502, 777503, 777504
Torque setting with screw terminals	**0.50 Nm** No. 777500, 777502, 777503, 777504
Cross section of external conductors with spring-loaded terminals: Flexible with/without crimp connectors	**0.20 - 1.50 mm² , 24 - 16 AWG** No. 787500, 787502, 787503, 787504
Spring-loaded terminals: Terminal points per connection	**2** No. 787500, 787502, 787503, 787504
Stripping length	**8 mm** No. 787500, 787502, 787503, 787504
Dimensions	
Height	**101.0 mm** No. 787500, 787502, 787503, 787504 **94.0 mm** No. 777500, 777502, 777503, 777504
Width	**45.0 mm**
Depth	**121.0 mm**
Weight	**340 g** No. 7875030, 787504 **350 g** No. 777503, 777504, 787500, 787502 **360 g** No. 777500, 777502

No. stands for order number.

It is essential to consider the relay's service life graphs. The relay outputs' safety-related characteristic data is only valid if the values in the service life graphs are met.

The PFH value depends on the switching frequency and the load on the relay output.
If the service life graphs are not accessible, the stated PFH value can be used irrespective of the switching frequency and the load, as the PFH value already considers the relay's B10d value as well as the failure rates of the other components.

All the units used within a safety function must be considered when calculating the safety characteristic data.

INFORMATION
A safety function's SIL/PL values are **not** identical to the SIL/PL values of the units that are used and may be different. We recommend that you use the PAScal software tool to calculate the safety function's SIL/PL values.

The standards current on **03/02** apply.

Conventional thermal current while loading several contacts	
Number of contacts	I_{th} per contact at U_B DC
1	**8.00 A**
2	**7.00 A**
3	**5.70 A**
4	**5.00 A**

Pilz GmbH & Co. KG, Felix-Wankel-Straße 2, 73760 Ostfildern, Germany
Telephone: +49 711 3409-0, Telefax: +49 711 3409-133, E-Mail: pilz.gmbh@pilz.de

Up to PL e of EN ISO 13849-1
PNOZ XV2P

Order reference

Type	Features			Terminals	Order no.
PNOZ XV2P		24 VDC	30 s selectable	Screw terminals	777 500
PNOZ XV2P C		24 VDC	30 s selectable	Spring-loaded terminals	787 500
PNOZ XV2P		24 VDC	3 s selectable	Screw terminals	777 502
PNOZ XV2P C		24 VDC	3 s selectable	Spring-loaded terminals	787 502
PNOZ XV2P		24 VDC	1 s fixed	Screw terminals	777 503
PNOZ XV2P C		24 VDC	1 s fixed	Spring-loaded terminals	787 503
PNOZ XV2P		24 VDC	0.5 s fixed	Screw terminals	777 504
PNOZ XV2P C		24 VDC	0.5 s fixed	Spring-loaded terminals	787 504

Up to PL e of EN ISO 13849-1
PNOZ XV2.1P



Safety relay for monitoring E-STOP pushbuttons and safety gates.

Approvals

	PNOZ XV2.1P
c UL us LISTED	◆
TÜV	◆
CCC	◆

Unit features

- Positive-guided relay outputs:
  - 2 safety contacts (N/O), instantaneous
  - 2 safety contacts (N/O), delay-on de-energisation
- Connection options for:
  - E-STOP pushbutton
  - Safety gate limit switch
  - Reset button
- Delay time can be cancelled via reset button
- Delay-on de-energisation, fixed or adjustable
- LED indicator for:
  - Switch status channel 1/2
  - Supply voltage
  - Reset circuit
- See order reference for unit types

Unit description

The safety relay meets the requirements of EN 60947-5-1, EN 60204-1 and VDE 0113-1 and may be used in applications with

- E-STOP pushbuttons
- Safety gates

The max. category the safety contacts can achieve in accordance with EN 954-1 and EN ISO 13849-1 is stated in the technical details.

Safety features

The relay meets the following safety requirements:

- The circuit is redundant with built-in self-monitoring.
- The safety function remains effective in the case of a component failure.
- The correct opening and closing of the safety function relays is tested automatically in each on-off cycle.
- The unit has an electronic fuse.

Block diagram

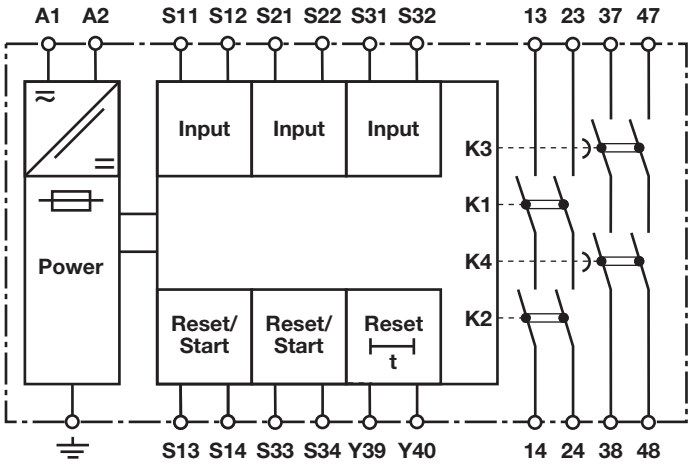

Pilz GmbH & Co. KG, Felix-Wankel-Straße 2, 73760 Ostfildern, Germany
Telephone: +49 711 3409-0, Telefax: +49 711 3409-133, E-Mail: pilz.gmbh@pilz.de

1002011-EN-02-2011-04

Up to PL e of EN ISO 13849-1
PNOZ XV2.1P

Function description

- Single-channel operation: no redundancy in the input circuit, earth faults in the reset and input circuit are detected.
- Dual-channel operation with detection of shorts across contacts: redundant input circuit, detects
  - earth faults in the reset and input circuit,
  - short circuits in the input circuit and, with a monitored reset, in the reset circuit too,
  - shorts between contacts in the input circuit.
- Automatic start: Unit is active once the input circuit has been closed.
- Monitored reset: Unit is active once the input circuit is closed and once the reset circuit is closed after the waiting period has elapsed (see technical details).
- Increase in the number of available instantaneous safety contacts by connecting contact expansion modules or external contactors.

Timing diagram

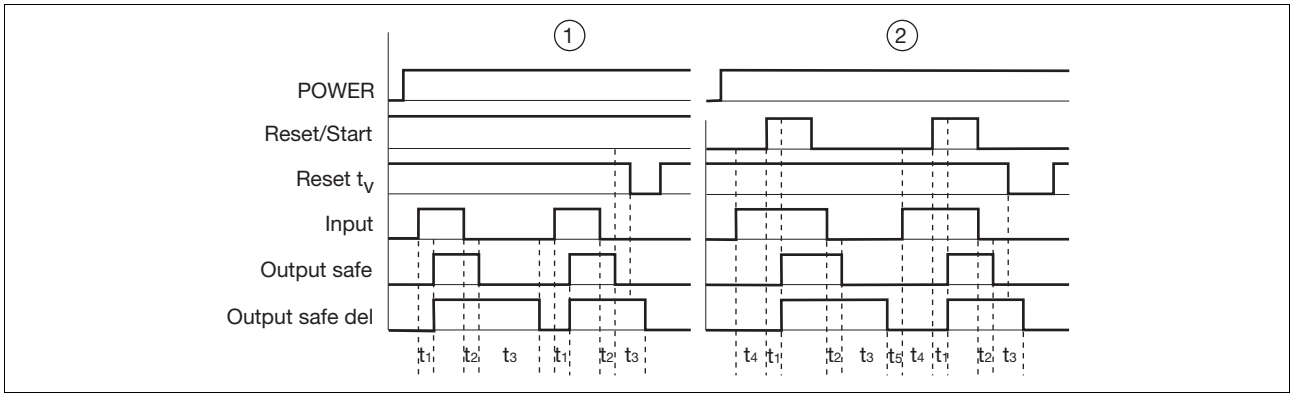

Key

- Power: Supply voltage
- Reset/Start: Reset circuit S13-S14, S33-S34
- Reset t_V: Y39-Y40
- Input: Input circuits S11-S12, S21-S22, S31-S32
- Output safe: Safety contacts, instantaneous 13-14, 23-24
- Output safe del: Safety contacts, delayed 37-38, 47-48
- ①: Automatic reset
- ②: Monitored reset
- t_1: Switch-on delay
- t_2: Delay-on de-energisation
- t_3: Delay time
- t_4: Waiting period
- t_5: Recovery time

Wiring

Please note:

- Information given in the “Technical details” must be followed.
- Outputs 13-14, 23-24 are instantaneous safety contacts, outputs 37-38, 47-48 are delay-on de-energisation safety contacts.
- To prevent contact welding, a fuse should be connected before the output contacts (see technical details).
- Calculation of the max. cable runs I_{max} in the input circuit:

$$I_{max} = \frac{R_{lmax}}{R_l / km}$$

R_{lmax} = max. overall cable resistance (see technical details)
R_l / km = cable resistance/km

- Use copper wire that can withstand 60/75 °C.
- Sufficient fuse protection must be provided on all output contacts with capacitive and inductive loads.

Up to PL e of EN ISO 13849-1
PNOZ XV2.1P

Preparing for operation

- Supply voltage

Supply voltage	AC	DC
	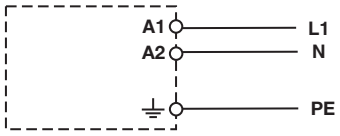	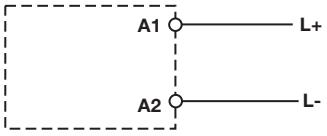

- Input circuit

Input circuit	Single-channel	Dual-channel
E-STOP **without** detection of shorts across contacts	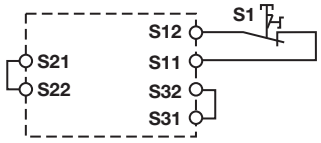	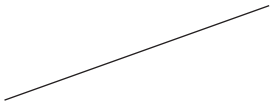
E-STOP **with** detection of shorts across contacts		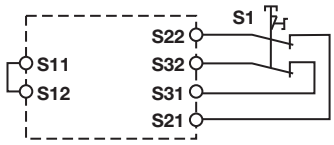
Safety gate **without** detection of shorts across contacts	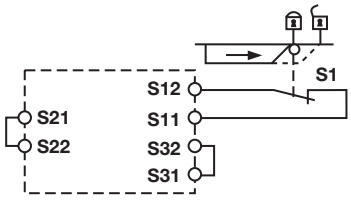	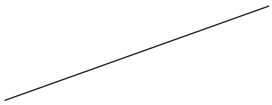
Safety gate **with** detection of shorts across contacts		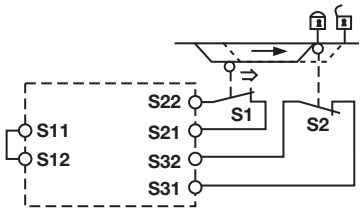

Pilz GmbH & Co. KG, Felix-Wankel-Straße 2, 73760 Ostfildern, Germany
Telephone: +49 711 3409-0, Telefax: +49 711 3409-133, E-Mail: pilz.gmbh@pilz.de

Up to PL e of EN ISO 13849-1
PNOZ XV2.1P

Reset circuit

Reset circuit	E-STOP wiring (single-channel) Safety gate (single-channel)	E-STOP wiring (dual-channel) Safety gate (dual-channel)
Automatic reset		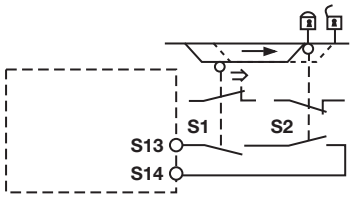
Monitored reset	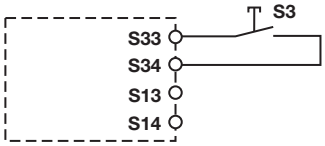	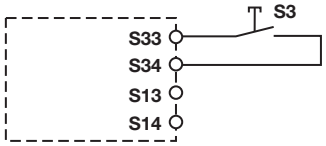

Reset delay time

Reset	Without reset	With reset
Link or N/C contact		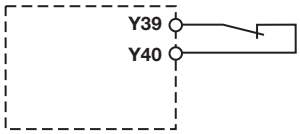

Feedback circuit

Feedback circuit	Automatic reset	Monitored reset
Contacts from external contactors	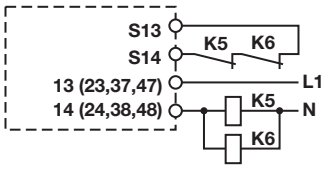	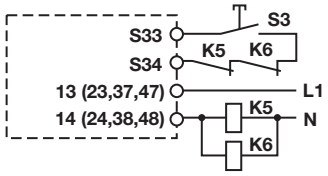

Key

S1/S2	E-STOP/safety gate switch
S3	Reset button
	Switch operated
	Gate open
	Gate closed

Up to PL e of EN ISO 13849-1
PNOZ XV2.1P

Terminal configuration

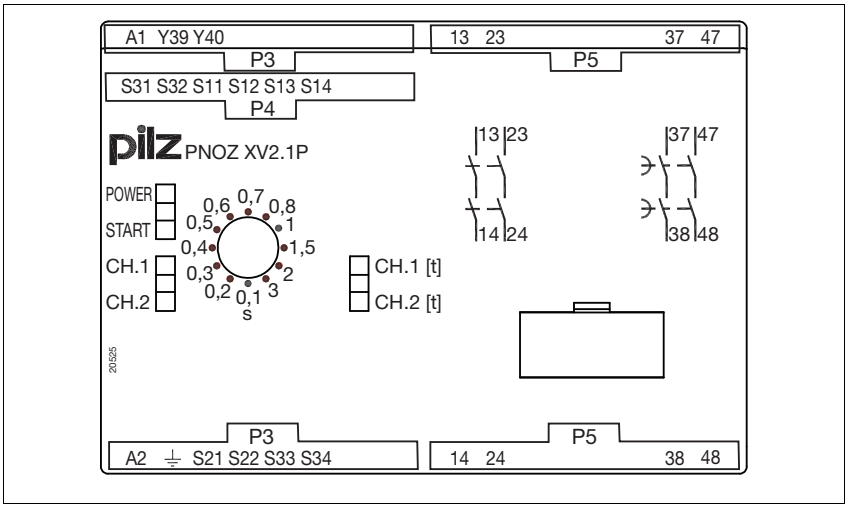

Installation

- The safety relay should be installed in a control cabinet with a protection type of at least IP54.
- Use the notch on the rear of the unit to attach it to a DIN rail.
- Ensure the unit is mounted securely on a vertical DIN rail (35 mm) by using a fixing element (e.g. retaining bracket or an end angle).

Dimensions

* with spring-loaded terminals

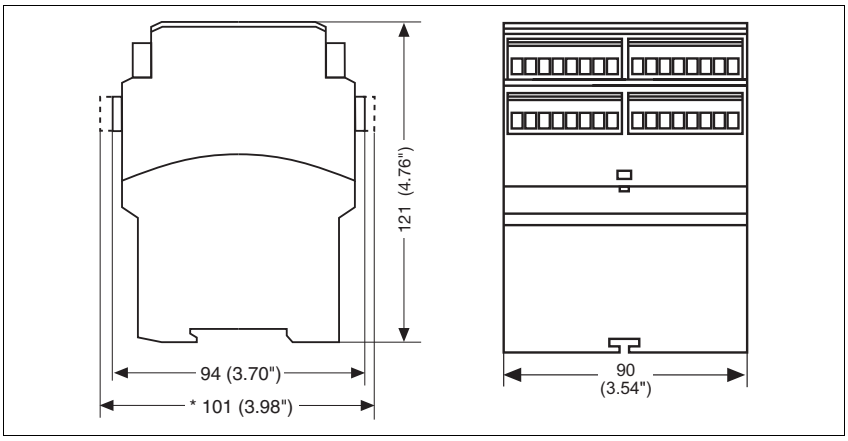

Pilz GmbH & Co. KG, Felix-Wankel-Straße 2, 73760 Ostfildern, Germany
Telephone: +49 711 3409-0, Telefax: +49 711 3409-133, E-Mail: pilz.gmbh@pilz.de

Up to PL e of EN ISO 13849-1
PNOZ XV2.1P

Notice

This data sheet is only intended for use during configuration. Please refer to the operating manual for installation and operation.

Service life graph

The service life graphs indicate the number of cycles from which failures due to wear must be expected. The wear is mainly caused by the electrical load; the mechanical load is negligible.

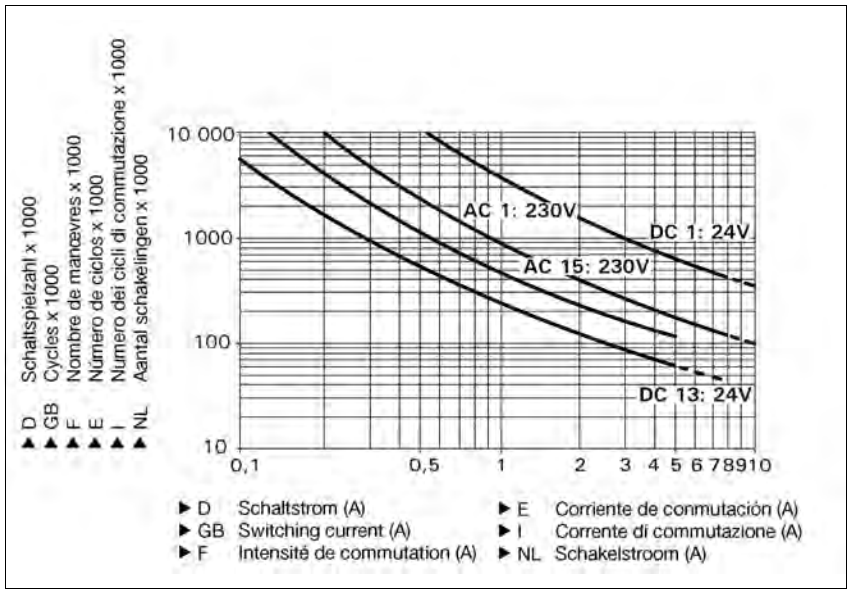

Example
- Inductive load: 0,2 A
- Utilisation category: AC15
- Contact service life: 4,000,000 cycles

Provided the application requires fewer than 4,000,000 cycles, the PFH value (see technical details) can be used in the calculation.

To increase the service life, sufficient spark suppression must be provided on all output contacts. With capacitive loads, any power surges that occur must be noted. With contactors, use freewheel diodes for spark suppression.

Technical details

Electrical data	
Supply voltage	
Supply voltage U_B AC/DC	**24 - 240 V**
Voltage tolerance	**-15 %/+10 %**
Power consumption at U_B AC	**8.5 VA**
Power consumption at U_B DC	**5.0 W**
Frequency range AC	**50 - 60 Hz**
Residual ripple DC	**160 %**
Voltage and current at	
Input circuit DC: **24.0 V**	**35.0 mA**
Reset circuit DC: **24.0 V**	**30.0 mA**
Feedback loop DC: **24.0 V**	**3.1 mA**
Number of output contacts	
Safety contacts (S) instantaneous:	**2**
Safety contacts (N/O), delayed:	**2**

Up to PL e of EN ISO 13849-1
PNOZ XV2.1P

Electrical data	
Utilisation category in accordance with **EN 60947-4-1**	
Safety contacts: AC1 at **240 V**	I_{min}: **0.01 A** , I_{max}: **8.0 A** P_{max}: **2000 VA**
Safety contacts: DC1 at **24 V**	I_{min}: **0.01 A** , I_{max}: **8.0 A** P_{max}: **200 W**
Safety contacts, delayed: AC1 at **240 V**	I_{min}: **0.01 A** , I_{max}: **8.0 A** P_{max}: **2000 VA**
Safety contacts, delayed: DC1 at **24 V**	I_{min}: **0.01 A** , I_{max}: **8.0 A** P_{max}: **200 W**
Utilisation category in accordance with **EN 60947-5-1**	
Safety contacts: AC15 at **230 V**	I_{max}: **5.0 A**
Safety contacts: DC13 at **24 V** (6 cycles/min)	I_{max}: **7.0 A**
Safety contacts, delayed: AC15 at **230 V**	I_{max}: **5.0 A**
Safety contacts, delayed: DC13 at **24 V** (6 cycles/min)	I_{max}: **7.0 A**
Contact material	**AgSnO2 + 0.2 µm Au**
External contact fuse protection (I_K = 1 kA) to **EN 60947-5-1**	
Blow-out fuse, quick	
Safety contacts:	**10 A**
Safety contacts, delayed:	**10 A**
Blow-out fuse, slow	
Safety contacts:	**6 A**
Safety contacts, delayed:	**6 A**
Circuit breaker 24 VAC/DC, characteristic B/C	
Safety contacts:	**6 A**
Safety contacts, delayed:	**6 A**
Max. overall cable resistance R_{lmax} input circuits, reset circuits	
single-channel at U_B DC	**200 Ohm**
single-channel at U_B AC	**200 Ohm**
dual-channel with detect. of shorts across contacts at U_B DC	**20 Ohm**
dual-channel with detect. of shorts across contacts at U_B AC	**20 Ohm**
Safety-related characteristic data	
PL in accordance with **EN ISO 13849-1: 2006**	
Safety contacts, instantaneous	**PL e** (**Cat. 4**)
Safety contacts, delayed <30 s	**PL d** (**Cat. 3**)
Safety contacts, delayed ≥30 s	**PL c** (**Cat. 1**)
Category in accordance with **EN 954-1**	
Safety contacts, instantaneous	**Cat. 4**
Safety contacts, delayed <30 s	**Cat. 3**
Safety contacts, delayed ≥30 s	**Cat. 1**
SIL CL in accordance with **EN IEC 62061**	
Safety contacts, instantaneous	**SIL CL 3**
Safety contacts, delayed <30 s	**SIL CL 3**
Safety contacts, delayed ≥30 s	**SIL CL 1**
PFH in accordance with **EN IEC 62061**	
Safety contacts, instantaneous	**2.31E-09**
Safety contacts, delayed <30 s	**2.64E-09**
Safety contacts, delayed ≥30 s	**2.87E-09**
SIL in accordance with **IEC 61511**	
Safety contacts, instantaneous	**SIL 3**
Safety contacts, delayed <30 s	**SIL 3**
Safety contacts, delayed ≥30 s	**SIL 2**
PFD in accordance with **IEC 61511**	
Safety contacts, instantaneous	**2.03E-06**
Safety contacts, delayed <30 s	**1.26E-05**
Safety contacts, delayed ≥30 s	**4.64E-05**
T_M [year] in accordance with **EN ISO 13849-1: 2006**	**20**

Pilz GmbH & Co. KG, Felix-Wankel-Straße 2, 73760 Ostfildern, Germany
Telephone: +49 711 3409-0, Telefax: +49 711 3409-133, E-Mail: pilz.gmbh@pilz.de

Up to PL e of EN ISO 13849-1
PNOZ XV2.1P

Times	
Switch-on delay	
with automatic reset typ.	**400 ms**
with automatic reset max.	**550 ms**
with automatic reset after power on typ.	**625 ms**
with automatic reset after power on max.	**870 ms**
on monitored reset with rising edge typ.	**35 ms**
on monitored reset with rising edge max.	**60 ms**
Delay-on de-energisation	
with E-STOP typ.	**15 ms**
with E-STOP max.	**30 ms**
with power failure typ. U_B AC/DC: **24 V**	**120 ms**
with power failure max. U_B AC/DC: **24 V**	**500 ms**
with power failure typ. U_B AC : **240 V**	**900 ms**
with power failure max. U_B AC : **240 V**	**2200 ms**
Recovery time at max. switching frequency 1/s	
after E-STOP	**50 ms +tv**
after power failure on universal power supply	**2250 ms**
Delay time t_V: selectable	**0,00 s**; **0,50 s**; **1,00 s**; **2,00 s**; **4,00 s**; **6,00 s**; **8,00 s**; **10,00 s**; **15,00 s**; **20,00 s**; **25,00 s**; **30,00 s** No. 777540 **0,10 s**; **0,20 s**; **0,30 s**; **0,40 s**; **0,50 s**; **0,60 s**; **0,70 s**; **0,80 s**; **1,00 s**; **1,50 s**; **2,00 s**; **3,00 s** No. 777542 **0,00 s**; **5,00 s**; **10,00 s**; **20,00 s**; **40,00 s**; **60,00 s**; **80,00 s**; **100,00 s**; **150,00 s**; **200,00 s**; **250,00 s**; **300,00 s** No. 777548 **0,00 s**; **0,50 s**; **1,00 s**; **2,00 s**; **4,00 s**; **6,00 s**; **8,00 s**; **10,00 s**; **15,00 s**; **20,00 s**; **25,00 s**; **30,00 s** No. 787540 **0,10 s**; **0,20 s**; **0,30 s**; **0,40 s**; **0,50 s**; **0,60 s**; **0,70 s**; **0,80 s**; **1,00 s**; **1,50 s**; **2,00 s**; **3,00 s** No. 787542 **0,00 s**; **5,00 s**; **10,00 s**; **20,00 s**; **40,00 s**; **60,00 s**; **80,00 s**; **100,00 s**; **150,00 s**; **200,00 s**; **250,00 s**; **300,00 s** No. 787548
Delay time t_V: fixed	**0.50 s** No. 777544 **10.00 s** No. 777547 **3.00 s** No. 777545
Repetition accuracy	**2 %**
Time accuracy	**-15 %/+15 % +50 ms**
Waiting period with a monitored reset	
with rising edge	**300 ms**
Min. start pulse duration with a monitored reset	
with rising edge	**30 ms**
Simultaneity, channel 1 and 2	∞
Supply interruption before de-energisation	**20 ms**
Environmental data	
EMC	**EN 60947-5-1**, **EN 61000-6-2**, **EN 61000-6-4**
Vibration to **EN 60068-2-6**	
Frequency	**10 - 55 Hz**
Amplitude	**0.35 mm**
Climatic suitability	**EN 60068-2-78**
Airgap creepage in accordance with **EN 60947-1**	
Pollution degree	**2**
Overvoltage category	**III**
Rated insulation voltage	**250 V**
Rated impulse withstand voltage	**4.00 kV**
Ambient temperature	**-10 - 55 °C**
Storage temperature	**-40 - 85 °C**
Protection type	
Mounting (e.g. cabinet)	**IP54**
Housing	**IP40**
Terminals	**IP20**

Up to PL e of EN ISO 13849-1
PNOZ XV2.1P

Mechanical data	
Housing material	
Housing	**PPO UL 94 V0**
Front	**ABS UL 94 V0**
Cross section of external conductors with screw terminals	
1 core flexible	**0.25 - 2.50 mm² , 24 - 12 AWG** No. 777540, 777542, 777544, 777545, 777547, 777548
2 core, same cross section, flexible:	
with crimp connectors, without insulating sleeve	**0.25 - 1.00 mm² , 24 - 16 AWG** No. 777540, 777542, 777544, 777545, 777547, 777548
without crimp connectors or with TWIN crimp connectors	**0.20 - 1.50 mm² , 24 - 16 AWG** No. 777540, 777542, 777544, 777545, 777547, 777548
Torque setting with screw terminals	**0.50 Nm** No. 777540, 777542, 777544, 777545, 777547, 777548
Cross section of external conductors with spring-loaded terminals: Flexible with/without crimp connectors	**0.20 - 1.50 mm² , 24 - 16 AWG** No. 787540, 787542, 787548
Spring-loaded terminals: Terminal points per connection	**2** No. 787540, 787542, 787548
Stripping length	**8 mm** No. 787540, 787542, 787548
Dimensions	
Height	**101.0 mm** No. 787540, 787542, 787548 **94.0 mm** No. 777540, 777542, 777544, 777545, 777547, 777548
Width	**90.0 mm**
Depth	**121.0 mm**
Weight	**550 g** No. 777544, 777545, 777547, 787540, 787542, 787548 **560 g** No. 777540, 777542, 777548

No. stands for order number.

It is essential to consider the relay's service life graphs. The relay outputs' safety-related characteristic data is only valid if the values in the service life graphs are met.

The PFH value depends on the switching frequency and the load on the relay output.
If the service life graphs are not accessible, the stated PFH value can be used irrespective of the switching frequency and the load, as the PFH value already considers the relay's B10d value as well as the failure rates of the other components.

All the units used within a safety function must be considered when calculating the safety characteristic data.

INFORMATION
A safety function's SIL/PL values are **not** identical to the SIL/PL values of the units that are used and may be different. We recommend that you use the PAScal software tool to calculate the safety function's SIL/PL values.

The standards current on **2008-07** apply.

Pilz GmbH & Co. KG, Felix-Wankel-Straße 2, 73760 Ostfildern, Germany
Telephone: +49 711 3409-0, Telefax: +49 711 3409-133, E-Mail: pilz.gmbh@pilz.de

Up to PL e of EN ISO 13849-1
PNOZ XV2.1P

Conventional thermal current while loading several contacts

Number of contacts	I_{th} per contact at U_B DC	I_{th} at U_B AC
1	**8.00 A**	**8.00 A**
2	**7.00 A**	**7.00 A**
3	**5.70 A**	**5.70 A**
4	**5.00 A**	**5.00 A**

Order reference

Type	Features		Terminals	Order no.
PNOZ XV2.1P C	24 - 240 VAC/DC	3 s selectable	Spring-loaded terminals	787 542
PNOZ XV2.1P	24 - 240 VAC/DC	3 s selectable	Screw terminals	777 542
PNOZ XV2.1P C	24 - 240 VAC/DC	30 s selectable	Spring-loaded terminals	787 540
PNOZ XV2.1P	24 - 240 VAC/DC	30 s selectable	Screw terminals	777 540
PNOZ XV2.1P C	24 - 240 VAC/DC	300 s selectable	Spring-loaded terminals	787 548
PNOZ XV2.1P	24 - 240 VAC/DC	300 s selectable	Screw terminals	777 548
PNOZ XV2.1P	24 - 240 VAC/DC	0.5 s fixed	Screw terminals	777 544
PNOZ XV2.1P	24 - 240 VAC/DC	3 s fixed	Screw terminals	777 545
PNOZ XV2.1P	24 - 240 VAC/DC	10 s fixed	Screw terminals	777 547

Up to PL e of EN ISO 13849-1
PNOZ XV3P



Safety relay for monitoring E-STOP pushbuttons, safety gates and light beam devices

Approvals

	PNOZ XV3P
c UL us LISTED	◆
TÜV SÜD	◆
CCC	◆

Unit features

- Positive-guided relay outputs:
  - 3 safety contacts (N/O), instantaneous
  - 2 safety contacts (N/O), delay-on de-energisation
- Connection options for:
  - E-STOP pushbutton
  - Safety gate limit switch
  - Reset button
  - Light barriers
- Delay-on de-energisation, fixed or adjustable
- Delay time can be cancelled via reset button
- LED indicator for:
  - Switch status channel 1/2
  - Supply voltage
  - Reset circuit
- Plug-in connection terminals (either spring-loaded terminal or screw terminal)
- See order reference for unit types

Unit description

The safety relay meets the requirements of EN 60947-5-1, EN 60204-1 and VDE 0113-1 and may be used in applications with

- E-STOP pushbuttons
- Safety gates
- Light beam devices

The max. category the safety contacts can achieve in accordance with EN 954-1 and EN ISO 13849-1 is stated in the technical details.

Safety features

The relay meets the following safety requirements:

- The circuit is redundant with built-in self-monitoring.
- The safety function remains effective in the case of a component failure.
- The correct opening and closing of the safety function relays is tested automatically in each on-off cycle.
- The unit has an electronic fuse.

Block diagram

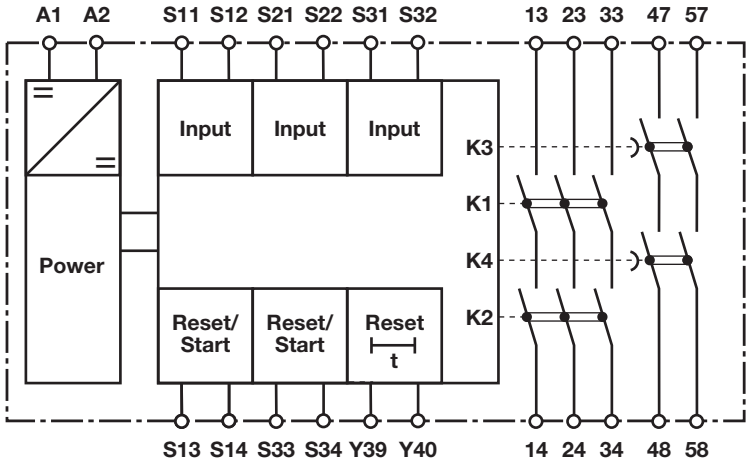

Pilz GmbH & Co. KG, Felix-Wankel-Straße 2, 73760 Ostfildern, Germany
Telephone: +49 711 3409-0, Telefax: +49 711 3409-133, E-Mail: pilz.gmbh@pilz.de

Up to PL e of EN ISO 13849-1
PNOZ XV3P

Function description

- Single-channel operation: no redundancy in the input circuit, earth faults in the reset and input circuit are detected.
- Dual-channel operation without detection of shorts across contacts: redundant input circuit, detects
  - earth faults in the reset and input circuit,
  - short circuits in the input circuit and, with a monitored reset, in the reset circuit too.
- Dual-channel operation with detection of shorts across contacts: redundant input circuit, detects
  - earth faults in the reset and input circuit,
  - short circuits in the input circuit and, with a monitored reset, in the reset circuit too,
  - shorts between contacts in the input circuit.
- Automatic start: Unit is active once the input circuit has been closed.
- Monitored reset: Unit is active once the input circuit is closed and once the reset circuit is closed after the waiting period has elapsed (see technical details).
- Increase in the number of available instantaneous safety contacts by connecting contact expansion modules or external contactors.

Timing diagram

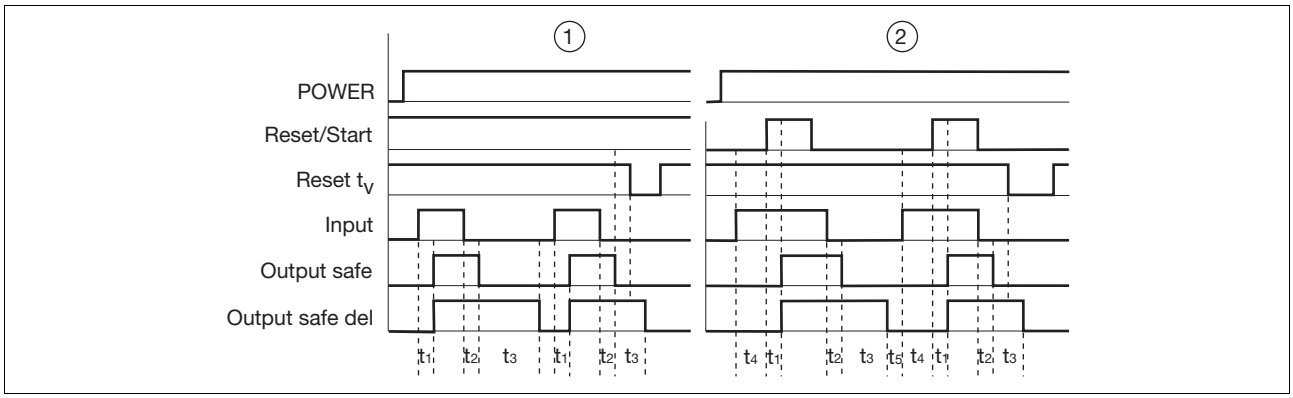

Key

- Power: Supply voltage
- Reset/Start: Reset circuit S13-S14, S33-S34
- Reset t_v: Y39-Y40
- Input: Input circuits S11-S12, S21-S22, S31-S32
- Output safe: Safety contacts, instantaneous 13-14, 23-24, 33-34
- Output safe del: Safety contacts, delayed 47-48, 57-58
- ①: Automatic reset
- ②: Monitored reset
- t_1: Switch-on delay
- t_2: Delay-on de-energisation
- t_3: Delay time
- t_4: Waiting period
- t_5: Recovery time

Wiring

Please note:

- Information given in the “Technical details” must be followed.
- Outputs 13-14, 23-24, 33-34 are instantaneous safety contacts, outputs 47-48, 57-58 are delay-on de-energisation safety contacts.
- To prevent contact welding, a fuse should be connected before the output contacts (see technical details).
- Calculation of the max. cable runs l_{max} in the input circuit:

$$l_{max} = \frac{R_{lmax}}{R_l / km}$$

R_{lmax} = max. overall cable resistance (see technical details)

R_l / km = cable resistance/km

- Use copper wire that can withstand 60/75 °C.
- Sufficient fuse protection must be provided on all output contacts with capacitive and inductive loads.

Pilz GmbH & Co. KG, Felix-Wankel-Straße 2, 73760 Ostfildern, Germany
Telephone: +49 711 3409-0, Telefax: +49 711 3409-133, E-Mail: pilz.gmbh@pilz.de

Up to PL e of EN ISO 13849-1
PNOZ XV3P

Preparing for operation

- Supply voltage

Supply voltage	AC	DC
		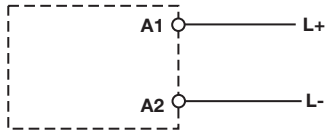

- Input circuit

Input circuit	Single-channel	Dual-channel
E-STOP **without** detection of shorts across contacts	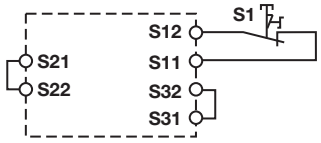	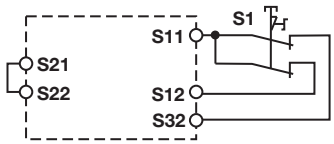
E-STOP **with** detection of shorts across contacts	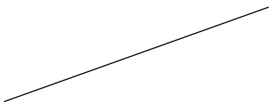	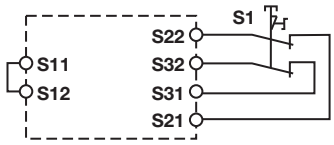
Safety gate **without** detection of shorts across contacts	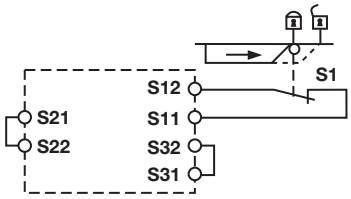	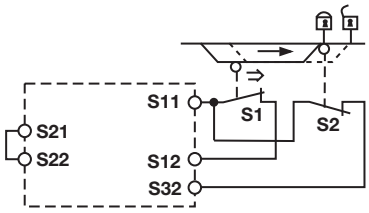
Safety gate **with** detection of shorts across contacts	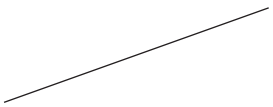	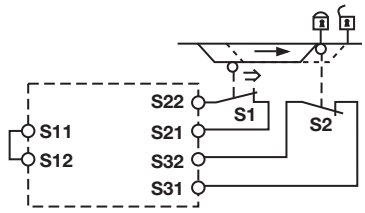
Light beam device **with** detection of shorts across contacts via ESPE	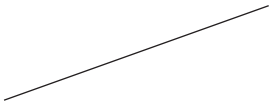	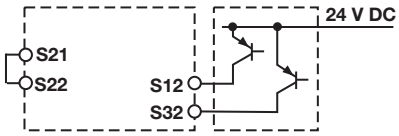

Pilz GmbH & Co. KG, Felix-Wankel-Straße 2, 73760 Ostfildern, Germany
Telephone: +49 711 3409-0, Telefax: +49 711 3409-133, E-Mail: pilz.gmbh@pilz.de

Up to PL e of EN ISO 13849-1
PNOZ XV3P

Reset circuit

Reset circuit	E-STOP wiring (single-channel), Safety gate (single-channel)	E-STOP wiring (dual-channel), Safety gate (dual-channel)
Automatic reset		
Monitored reset	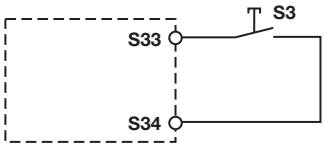	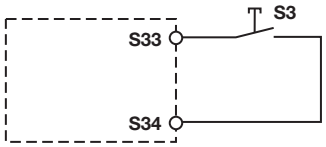

Reset delay time

Reset	Without reset	With reset
Link or N/C contact		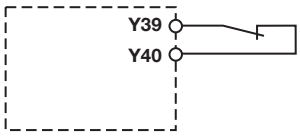

Feedback circuit

Feedback circuit	Automatic reset	Monitored reset
Contacts from external contactors	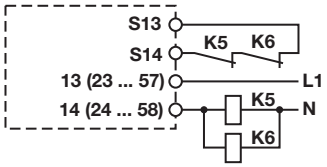	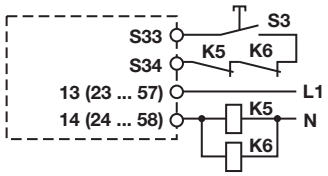

Key

S1/S2	E-STOP/safety gate switch
S3	Reset button
	Switch operated
	Gate open
	Gate closed

Up to PL e of EN ISO 13849-1
PNOZ XV3P

Terminal configuration

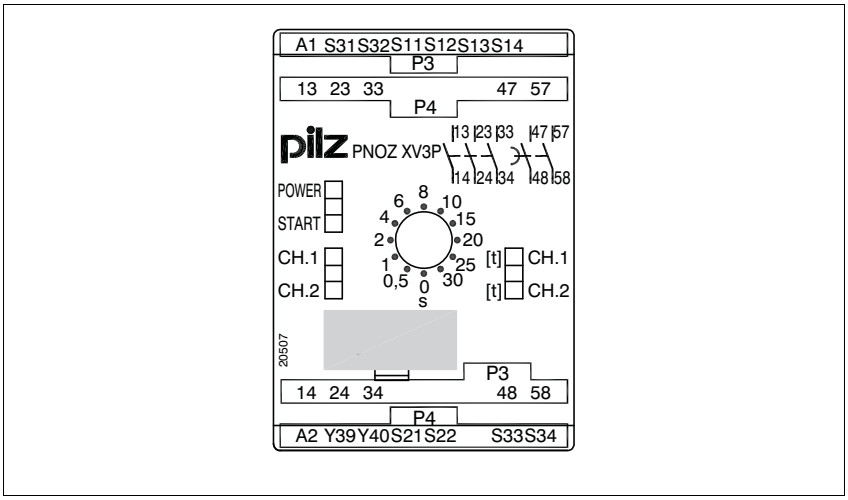

Installation

- The safety relay should be installed in a control cabinet with a protection type of at least IP54.
- Use the notch on the rear of the unit to attach it to a DIN rail.
- Ensure the unit is mounted securely on a vertical DIN rail (35 mm) by using a fixing element (e.g. retaining bracket or an end angle).

Dimensions

* with spring-loaded terminals

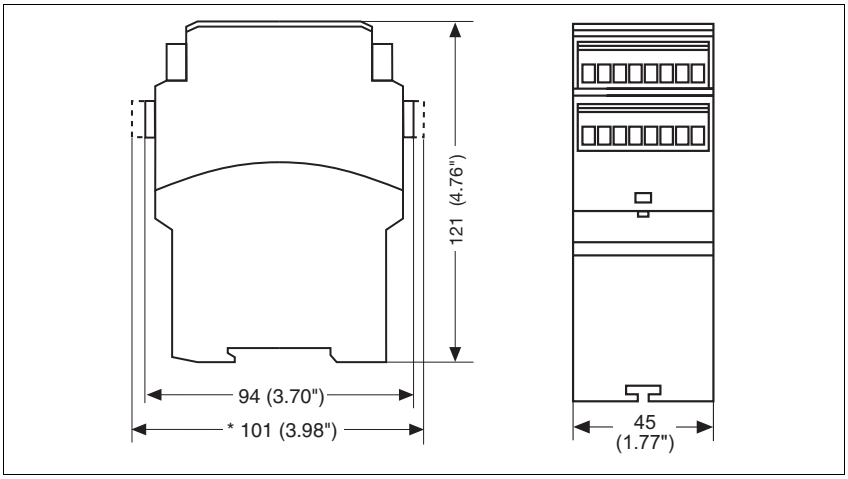

Pilz GmbH & Co. KG, Felix-Wankel-Straße 2, 73760 Ostfildern, Germany
Telephone: +49 711 3409-0, Telefax: +49 711 3409-133, E-Mail: pilz.gmbh@pilz.de

Up to PL e of EN ISO 13849-1
PNOZ XV3P

Notice

This data sheet is only intended for use during configuration. Please refer to the operating manual for installation and operation.

Service life graph

The service life graphs indicate the number of cycles from which failures due to wear must be expected. The wear is mainly caused by the electrical load; the mechanical load is negligible.

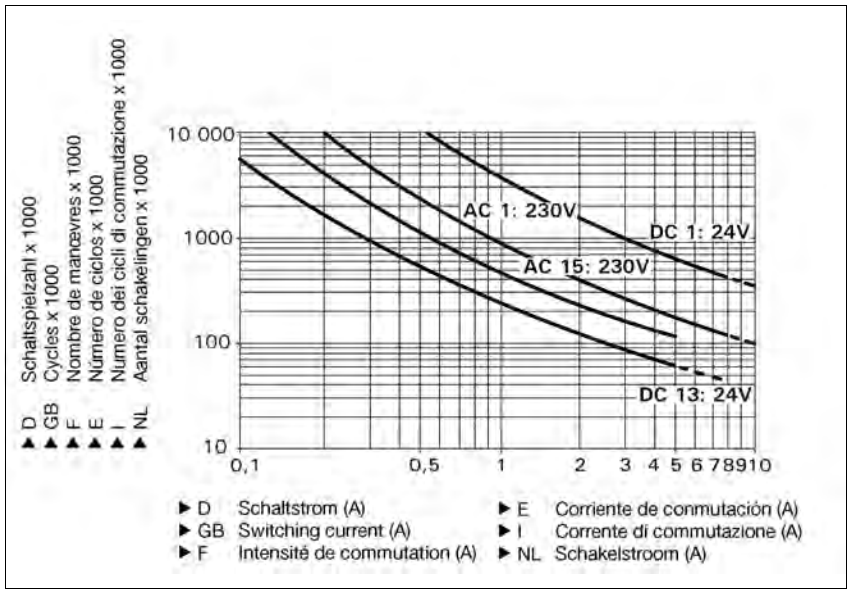

Example
- Inductive load: 0,2 A
- Utilisation category: AC15
- Contact service life: 4,000,000 cycles

Provided the application requires fewer than 4,000,000 cycles, the PFH value (see technical details) can be used in the calculation.

To increase the service life, sufficient spark suppression must be provided on all output contacts. With capacitive loads, any power surges that occur must be noted. With contactors, use freewheel diodes for spark suppression.

Technical details

Electrical data	
Supply voltage	
Supply voltage U_B DC	**24 V**
Voltage tolerance	**-15 %/+10 %**
Power consumption at U_B DC	**4.5 W**
Residual ripple DC	**160 %**
Voltage and current at	
Input circuit DC: **24.0 V**	**35.0 mA**
Reset circuit DC: **24.0 V**	**50.0 mA**
Feedback loop DC: **24.0 V**	**3.5 mA**
Number of output contacts	
Safety contacts (S) instantaneous:	**3**
Safety contacts (N/O), delayed:	**2**

Up to PL e of EN ISO 13849-1
PNOZ XV3P

Electrical data	
Utilisation category in accordance with **EN 60947-4-1**	
Safety contacts: AC1 at **240 V**	I_{min}: **0.01 A** , I_{max}: **8.0 A** P_{max}: **2000 VA**
Safety contacts: DC1 at **24 V**	I_{min}: **0.01 A** , I_{max}: **8.0 A** P_{max}: **200 W**
Safety contacts, delayed: AC1 at **240 V**	I_{min}: **0.01 A** , I_{max}: **8.0 A** P_{max}: **2000 VA**
Safety contacts, delayed: DC1 at **24 V**	I_{min}: **0.01 A** , I_{max}: **8.0 A** P_{max}: **200 W**
Utilisation category in accordance with **EN 60947-5-1**	
Safety contacts: AC15 at **230 V**	I_{max}: **5.0 A**
Safety contacts: DC13 at **24 V** (6 cycles/min)	I_{max}: **7.0 A**
Safety contacts, delayed: AC15 at **230 V**	I_{max}: **5.0 A**
Safety contacts, delayed: DC13 at **24 V** (6 cycles/min)	I_{max}: **7.0 A**
Contact material	**AgSnO2 + 0.2 µm Au**
External contact fuse protection (I_K = 1 kA) to **EN 60947-5-1**	
Blow-out fuse, quick	
Safety contacts:	**10 A**
Safety contacts, delayed:	**10 A**
Blow-out fuse, slow	
Safety contacts:	**6 A**
Safety contacts, delayed:	**6 A**
Circuit breaker 24 VAC/DC, characteristic B/C	
Safety contacts:	**6 A**
Safety contacts, delayed:	**6 A**
Max. overall cable resistance R_{lmax} input circuits, reset circuits	
single-channel at U_B DC	**100 Ohm**
dual-channel without detect. of shorts across contacts at U_B DC	**100 Ohm**
dual-channel with detect. of shorts across contacts at U_B DC	**10 Ohm**
Safety-related characteristic data	
PL in accordance with **EN ISO 13849-1: 2006**	
Safety contacts, instantaneous	**PL e** (**Cat. 4**)
Safety contacts, delayed <30 s	**PL d** (**Cat. 3**)
Safety contacts, delayed ≥30 s	**PL c** (**Cat. 1**)
Category in accordance with **EN 954-1**	
Safety contacts, instantaneous	**Cat. 4**
Safety contacts, delayed <30 s	**Cat. 3**
Safety contacts, delayed ≥30 s	**Cat. 1**
SIL CL in accordance with **EN IEC 62061**	
Safety contacts, instantaneous	**SIL CL 3**
Safety contacts, delayed <30 s	**SIL CL 3**
Safety contacts, delayed ≥30 s	**SIL CL 1**
PFH in accordance with **EN IEC 62061**	
Safety contacts, instantaneous	**2.31E-09**
Safety contacts, delayed <30 s	**2.64E-09**
Safety contacts, delayed ≥30 s	**2.87E-09**
SIL in accordance with **IEC 61511**	
Safety contacts, instantaneous	**SIL 3**
Safety contacts, delayed <30 s	**SIL 3**
Safety contacts, delayed ≥30 s	**SIL 2**
PFD in accordance with **IEC 61511**	
Safety contacts, instantaneous	**2.03E-06**
Safety contacts, delayed <30 s	**1.26E-05**
Safety contacts, delayed ≥30 s	**4.64E-05**
T_M [year] in accordance with **EN ISO 13849-1: 2006**	**20**

Pilz GmbH & Co. KG, Felix-Wankel-Straße 2, 73760 Ostfildern, Germany
Telephone: +49 711 3409-0, Telefax: +49 711 3409-133, E-Mail: pilz.gmbh@pilz.de

Up to PL e of EN ISO 13849-1
PNOZ XV3P

Times	
Switch-on delay	
with automatic reset typ.	**350 ms**
with automatic reset max.	**650 ms**
with automatic reset after power on typ.	**385 ms**
with automatic reset after power on max.	**700 ms**
on monitored reset with rising edge typ.	**35 ms**
on monitored reset with rising edge max.	**70 ms**
Delay-on de-energisation	
with E-STOP typ.	**15 ms**
with E-STOP max.	**30 ms**
with power failure typ.	**85 ms**
with power failure max.	**200 ms**
Recovery time at max. switching frequency 1/s	
after E-STOP	**50 ms +tv**
after power failure	**250 ms**
Delay time t_V: selectable	**0,00 s**; **0,50 s**; **1,00 s**; **2,00 s**; **4,00 s**; **6,00 s**; **8,00 s**; **10,00 s**; **15,00 s**; **20,00 s**; **25,00 s**; **30,00 s** No. 777510 **0,10 s**; **0,20 s**; **0,30 s**; **0,40 s**; **0,50 s**; **0,60 s**; **0,70 s**; **0,80 s**; **1,00 s**; **1,50 s**; **2,00 s**; **3,00 s** No. 777512 **0,00 s**; **5,00 s**; **10,00 s**; **20,00 s**; **40,00 s**; **60,00 s**; **80,00 s**; **100,00 s**; **150,00 s**; **200,00 s**; **250,00 s**; **300,00 s** No. 777518 **0,00 s**; **0,50 s**; **1,00 s**; **2,00 s**; **4,00 s**; **6,00 s**; **8,00 s**; **10,00 s**; **15,00 s**; **20,00 s**; **25,00 s**; **30,00 s** No. 787510 **0,10 s**; **0,20 s**; **0,30 s**; **0,40 s**; **0,50 s**; **0,60 s**; **0,70 s**; **0,80 s**; **1,00 s**; **1,50 s**; **2,00 s**; **3,00 s** No. 787512 **0,00 s**; **5,00 s**; **10,00 s**; **20,00 s**; **40,00 s**; **60,00 s**; **80,00 s**; **100,00 s**; **150,00 s**; **200,00 s**; **250,00 s**; **300,00 s** No. 787518
Delay time t_V: fixed	**0.50 s** No. 777514 **10.00 s** No. 777517 **3.00 s** No. 777515
Repetition accuracy	**2 %**
Time accuracy	**-15 %/+15 % +50 ms**
Waiting period with a monitored reset	
with rising edge	**300 ms**
Min. start pulse duration with a monitored reset	
with rising edge	**30 ms**
Simultaneity, channel 1 and 2	∞
Supply interruption before de-energisation	**20 ms**
Environmental data	
EMC	**EN 60947-5-1**, **EN 61000-6-2**
Vibration to **EN 60068-2-6**	
Frequency	**10 - 55 Hz**
Amplitude	**0.35 mm**
Climatic suitability	**EN 60068-2-78**
Airgap creepage in accordance with **EN 60947-1**	
Pollution degree	**2**
Overvoltage category	**III**
Rated insulation voltage	**250 V**
Rated impulse withstand voltage	**4.00 kV**
Ambient temperature	**-10 - 55 °C**
Storage temperature	**-40 - 85 °C**
Protection type	
Mounting (e.g. cabinet)	**IP54**
Housing	**IP40**
Terminals	**IP20**

Up to PL e of EN ISO 13849-1
PNOZ XV3P

Mechanical data	
Housing material	
Housing	**PPO UL 94 V0**
Front	**ABS UL 94 V0**
Cross section of external conductors with screw terminals	
1 core flexible	**0.25 - 2.50 mm² , 24 - 12 AWG** No. 777510, 777512, 777514, 777515, 777517, 777518
2 core, same cross section, flexible:	
with crimp connectors, without insulating sleeve	**0.25 - 1.00 mm² , 24 - 16 AWG** No. 777510, 777512, 777514, 777515, 777517, 777518
without crimp connectors or with TWIN crimp connectors	**0.20 - 1.50 mm² , 24 - 16 AWG** No. 777510, 777512, 777514, 777515, 777517, 777518
Torque setting with screw terminals	**0.50 Nm** No. 777510, 777512, 777514, 777515, 777517, 777518
Cross section of external conductors with spring-loaded terminals: Flexible with/without crimp connectors	**0.20 - 1.50 mm² , 24 - 16 AWG** No. 787510, 787512, 787518
Spring-loaded terminals: Terminal points per connection	**2** No. 787510, 787512, 787518
Stripping length	**8 mm** No. 787510, 787512, 787518
Dimensions	
Height	**101.0 mm** No. 787510, 787512, 787518 **94.0 mm** No. 777510, 777512, 777514, 777515, 777517, 777518
Width	**45.0 mm**
Depth	**121.0 mm**
Weight	**360 g** No. 777514, 777515, 777517, 787510, 787512, 787518 **370 g** No. 777510, 777512, 777518

No. stands for order number.

It is essential to consider the relay's service life graphs. The relay outputs' safety-related characteristic data is only valid if the values in the service life graphs are met.

The PFH value depends on the switching frequency and the load on the relay output.
If the service life graphs are not accessible, the stated PFH value can be used irrespective of the switching frequency and the load, as the PFH value already considers the relay's B10d value as well as the failure rates of the other components.

All the units used within a safety function must be considered when calculating the safety characteristic data.

INFORMATION
A safety function's SIL/PL values are **not** identical to the SIL/PL values of the units that are used and may be different. We recommend that you use the PAScal software tool to calculate the safety function's SIL/PL values.

The standards current on **08/02** apply.

Pilz GmbH & Co. KG, Felix-Wankel-Straße 2, 73760 Ostfildern, Germany
Telephone: +49 711 3409-0, Telefax: +49 711 3409-133, E-Mail: pilz.gmbh@pilz.de

Up to PL e of EN ISO 13849-1
PNOZ XV3P

Conventional thermal current while loading several contacts

Number of contacts	I_{th} per contact at U_B DC
1	**8.00 A**
2	**6.80 A**
3	**5.50 A**
4	**4.80 A**
5	**4.30 A**

Order reference

Type	Features			Terminals	Order no.
PNOZ XV3P		24 VDC	0.5 s fixed	Screw terminals	777 514
PNOZ XV3P		24 VDC	3 s fixed	Screw terminals	777 515
PNOZ XV3P		24 VDC	10 s fixed	Screw terminals	777 517
PNOZ XV3P C		24 VDC	3 s selectable	Spring-loaded terminals	787 512
PNOZ XV3P		24 VDC	3 s selectable	Screw terminals	777 512
PNOZ XV3P C		24 VDC	30 s selectable	Spring-loaded terminals	787 510
PNOZ XV3P		24 VDC	30 s selectable	Screw terminals	777 510
PNOZ XV3P C		24 VDC	300 s selectable	Spring-loaded terminals	787 518
PNOZ XV3P		24 VDC	300 s selectable	Screw terminals	777 518

Up to PL e of EN ISO 13849-1
PNOZ XV3.1P



Safety relay for monitoring E-STOP pushbuttons and safety gates.

Approvals

	PNOZ XV3.1P
c UL us LISTED	◆
TÜV SÜD	◆
CCC	◆

Unit features

- Positive-guided relay outputs:
  - 3 safety contacts (N/O), instantaneous
  - 2 safety contacts (N/O), delay-on de-energisation
  - 1 auxiliary contact (N/C), instantaneous
- Connection options for:
  - E-STOP pushbutton
  - Safety gate limit switch
  - Light barriers
  - Reset button
- Delay-on de-energisation, fixed or adjustable
- Delay time can be cancelled via reset button
- LED indicator for:
  - Switch status channel 1/2
  - Supply voltage
  - Reset circuit
- Plug-in connection terminals (either spring-loaded terminal or screw terminal)
- See order reference for unit types

Unit description

The safety relay meets the requirements of EN 60947-5-1, EN 60204-1 and VDE 0113-1 and may be used in applications with

- E-STOP pushbuttons
- Safety gates
- Light beam devices

The max. category the safety contacts can achieve in accordance with EN 954-1 and EN ISO 13849-1 is stated in the technical details.

Safety features

The relay meets the following safety requirements:

- The circuit is redundant with built-in self-monitoring.
- The safety function remains effective in the case of a component failure.
- The correct opening and closing of the safety function relays is tested automatically in each on-off cycle.
- The tranformer is short circuit-proof. An electronic fuse is used on a DC supply.

Block diagram

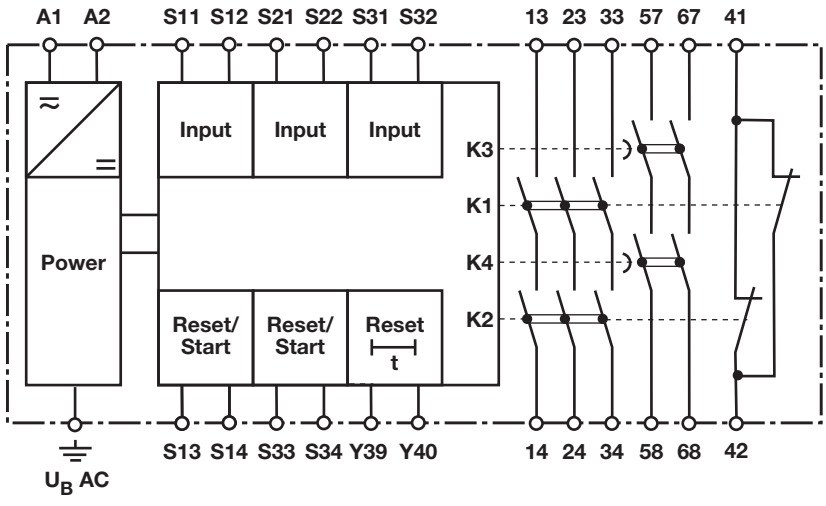

Pilz GmbH & Co. KG, Felix-Wankel-Straße 2, 73760 Ostfildern, Germany
Telephone: +49 711 3409-0, Telefax: +49 711 3409-133, E-Mail: pilz.gmbh@pilz.de

1002013-EN-02-2011-04

Up to PL e of EN ISO 13849-1
PNOZ XV3.1P

Function description

- Single-channel operation: no redundancy in the input circuit, earth faults in the reset circuit are detected.
- Dual-channel operation with detection of shorts across contacts: redundant input circuit, detects
  – earth faults in the reset and input circuit,
  – short circuits in the input circuit and, with a monitored reset, in the reset circuit too,
  – shorts between contacts in the input circuit.
- Dual-channel operation without detection of shorts across contacts: redundant input circuit, detects
  – earth faults in the reset and input circuit,
  – short circuits in the input circuit and, with a monitored reset, in the reset circuit too.
- Automatic start: Unit is active once the input circuit has been closed.
- Monitored reset: Unit is active once the input circuit is closed and once the reset circuit is closed after the waiting period has elapsed (see technical details).
- Increase in the number of available instantaneous safety contacts by connecting contact expansion modules or external contactors.

Timing diagram

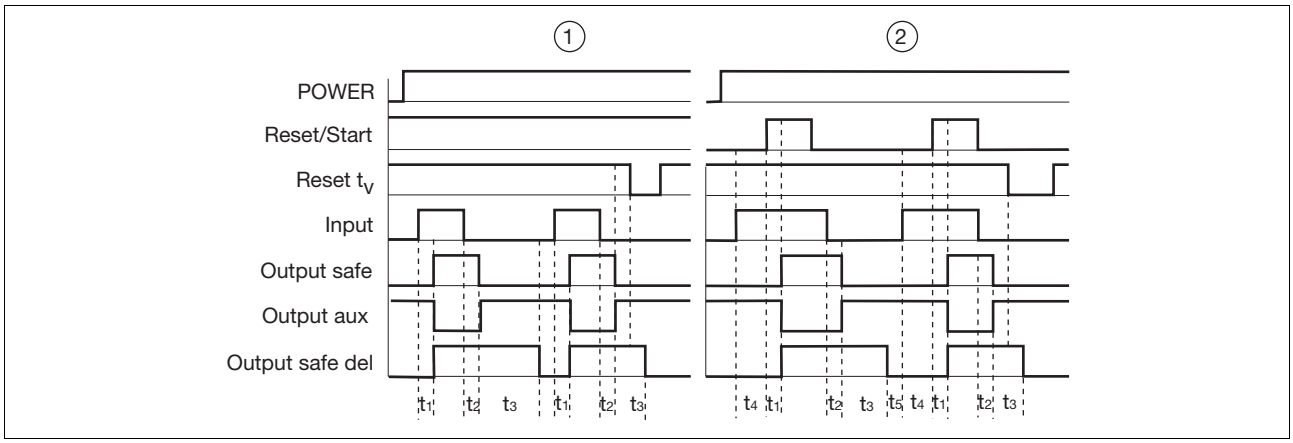

Key

- Power: Supply voltage
- Reset/Start: Reset circuit S13-S14, S33-S34
- Input: Input circuits S11-S12, S21-S22, S31-S32
- Output safe: Safety contacts, instantaneous 13-14, 23-24, 33-34
- Output safe del: Safety contacts, delayed 57-58, 67-68
- Output aux: Auxiliary contacts 41-42
- ①: Automatic reset
- ②: Monitored reset
- t_1: Switch-on delay
- t_2: Delay-on de-energisation
- t_3: Delay time
- t_4: Waiting period
- t_5: Recovery time

Wiring

Please note:

- Information given in the “Technical details” must be followed.
- Outputs 13-14, 23-24, 33-34 are instantaneous safety contacts, outputs 57-58, 67-68 are delay-on de-energisation safety contacts, output 41-42 is an instantaneous auxiliary contact (e.g. for display).
- To prevent contact welding, a fuse should be connected before the output contacts (see technical details).
- Calculation of the max. cable runs I_{max} in the input circuit:

$$I_{max} = \frac{R_{lmax}}{R_l / km}$$

R_{lmax} = max. overall cable resistance (see technical details)
R_l /km = cable resistance/km

- Use copper wire that can withstand 60/75 °C.
- Sufficient fuse protection must be provided on all output contacts with capacitive and inductive loads.

Up to PL e of EN ISO 13849-1
PNOZ XV3.1P

Preparing for operation

- Supply voltage

Supply voltage	AC	DC
	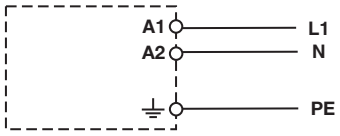	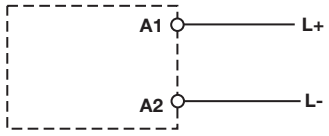

- Input circuit

Input circuit	Single-channel	Dual-channel
E-STOP **without** detection of shorts across contacts	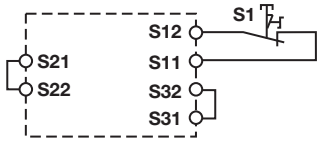	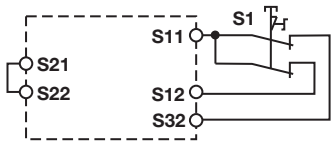
E-STOP **with** detection of shorts across contacts	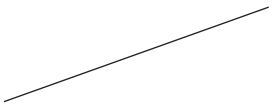	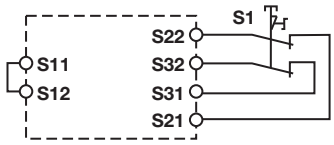
Safety gate **without** detection of shorts across contacts	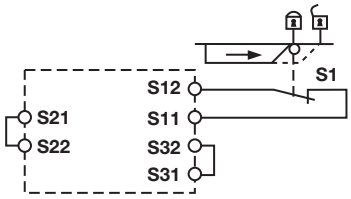	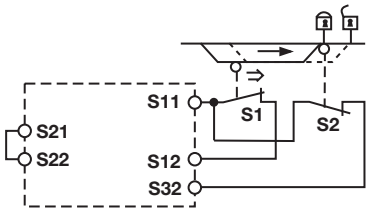
Safety gate **with** detection of shorts across contacts	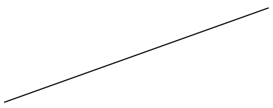	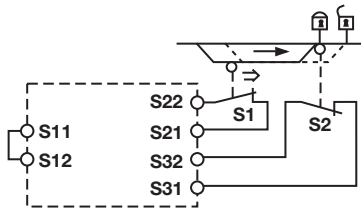
Light beam device **with** detection of shorts across contacts via ESPE (only when U_B = 24 VDC)	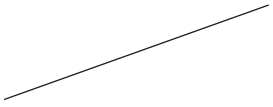	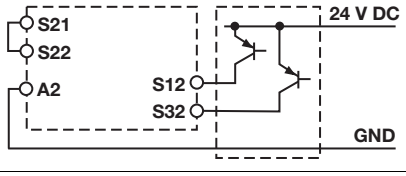

Pilz GmbH & Co. KG, Felix-Wankel-Straße 2, 73760 Ostfildern, Germany
Telephone: +49 711 3409-0, Telefax: +49 711 3409-133, E-Mail: pilz.gmbh@pilz.de

Up to PL e of EN ISO 13849-1
PNOZ XV3.1P

Reset circuit

Reset circuit	E-STOP wiring (single-channel), Safety gate (single-channel)	E-STOP wiring (dual-channel) Safety gate (dual-channel)
Automatic reset		
Monitored reset	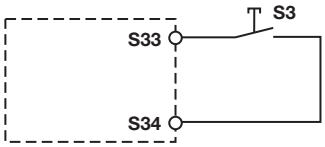	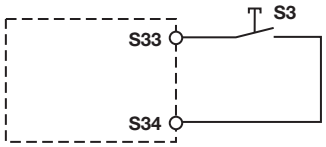

Reset delay time

Reset	Without reset	With reset
Link or N/C contact		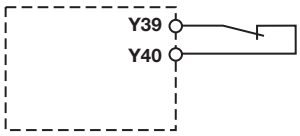

Feedback circuit

Feedback circuit	Automatic reset	Monitored reset
Contacts from external contactors	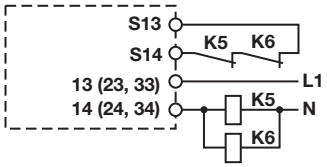	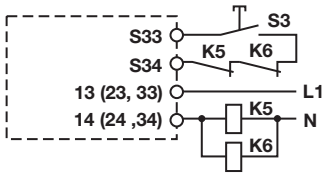

Key

S1/S2	E-STOP/safety gate switch
S3	Reset button
	Switch operated
	Gate open
	Gate closed

Up to PL e of EN ISO 13849-1
PNOZ XV3.1P

Terminal configuration

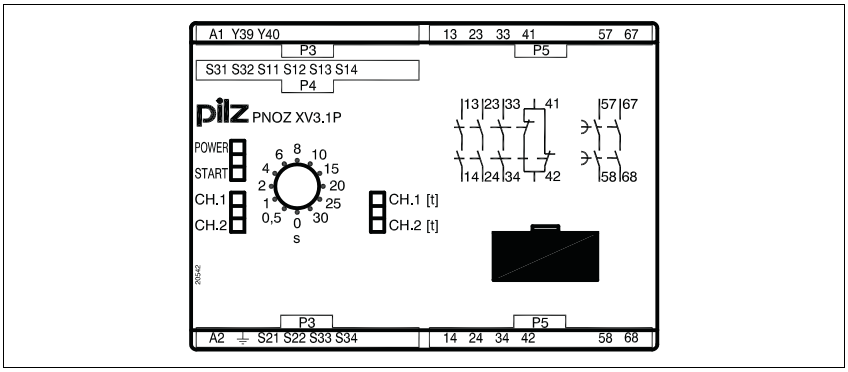

Installation

- The safety relay should be installed in a control cabinet with a protection type of at least IP54.
- Use the notch on the rear of the unit to attach it to a DIN rail.
- Ensure the unit is mounted securely on a vertical DIN rail (35 mm) by using a fixing element (e.g. retaining bracket or an end angle).

Dimensions

* with spring-loaded terminals

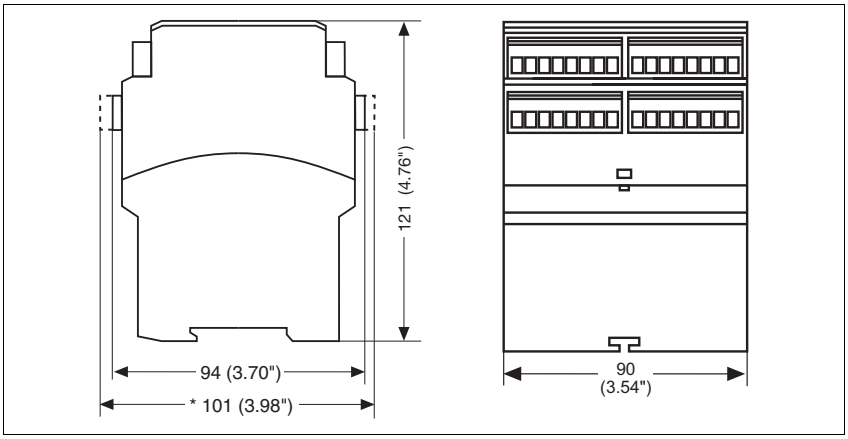

Pilz GmbH & Co. KG, Felix-Wankel-Straße 2, 73760 Ostfildern, Germany
Telephone: +49 711 3409-0, Telefax: +49 711 3409-133, E-Mail: pilz.gmbh@pilz.de

Up to PL e of EN ISO 13849-1
PNOZ XV3.1P

Notice

This data sheet is only intended for use during configuration. Please refer to the operating manual for installation and operation.

Service life graph

The service life graphs indicate the number of cycles from which failures due to wear must be expected. The wear is mainly caused by the electrical load; the mechanical load is negligible.

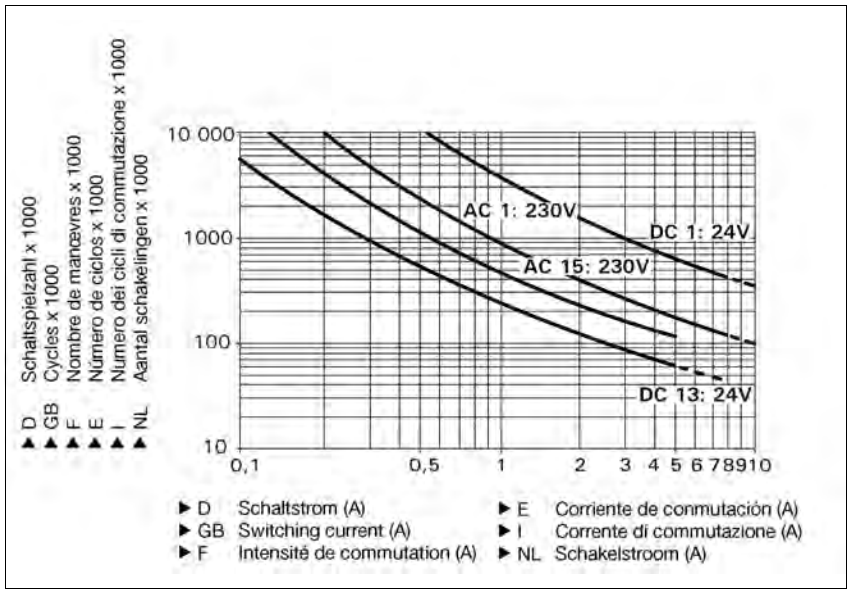

Example
- Inductive load: 0,2 A
- Utilisation category: AC15
- Contact service life: 4,000,000 cycles

Provided the application requires fewer than 4,000,000 cycles, the PFH value (see technical details) can be used in the calculation.

To increase the service life, sufficient spark suppression must be provided on all output contacts. With capacitive loads, any power surges that occur must be noted. With contactors, use freewheel diodes for spark suppression.

Technical details	
Electrical data	
Supply voltage	
Supply voltage U_B DC	**24 V**
Supply voltage U_B AC/DC	**24 - 240 V**
Voltage tolerance	**-15 %/+10 %**
Power consumption at U_B AC	**8.5 VA** No. 777530, 777532, 777538, 787530, 787532, 787538
Power consumption at U_B DC	**4.5 W** No. 777520, 777522, 777525, 787520, 787522 **5.0 W** No. 777530, 777532, 777538, 787530, 787532, 787538
Frequency range AC	**50 - 60 Hz**
Residual ripple DC	**160 %**
Voltage and current at	
Input circuit DC: **24.0 V**	**40.0 mA** No. 777530, 777532, 777538, 787530, 787532, 787538 **50.0 mA** No. 777520, 777522, 777525, 787520, 787522
Reset circuit DC: **24.0 V**	**40.0 mA**
Feedback loop DC: **24.0 V**	**3.1 mA**

Up to PL e of EN ISO 13849-1
PNOZ XV3.1P

Electrical data	
Number of output contacts	
Safety contacts (S) instantaneous:	**3**
Safety contacts (N/O), delayed:	**2**
Auxiliary contacts (N/C):	**1**
Utilisation category in accordance with **EN 60947-4-1**	
Safety contacts: AC1 at **240 V**	I_{min}: **0.01 A** , I_{max}: **8.0 A** P_{max}: **2000 VA**
Safety contacts: DC1 at **24 V**	I_{min}: **0.01 A** , I_{max}: **8.0 A** P_{max}: **200 W**
Safety contacts, delayed: AC1 at **240 V**	I_{min}: **0.01 A** , I_{max}: **8.0 A** P_{max}: **2000 VA**
Safety contacts, delayed: DC1 at **24 V**	I_{min}: **0.01 A** , I_{max}: **8.0 A** P_{max}: **200 W**
Auxiliary contacts: AC1 at **240 V**	I_{min}: **0.01 A** , I_{max}: **8.0 A** P_{max}: **2000 VA**
Auxiliary contacts: DC1 at **24 V**	I_{min}: **0.01 A** , I_{max}: **8.0 A** P_{max}: **200 W**
Utilisation category in accordance with **EN 60947-5-1**	
Safety contacts: AC15 at **230 V**	I_{max}: **5.0 A**
Safety contacts: DC13 at **24 V** (6 cycles/min)	I_{max}: **7.0 A**
Safety contacts, delayed: AC15 at **230 V**	I_{max}: **5.0 A**
Safety contacts, delayed: DC13 at **24 V** (6 cycles/min)	I_{max}: **7.0 A**
Auxiliary contacts: AC15 at **230 V**	I_{max}: **5.0 A**
Auxiliary contacts: DC13 at **24 V** (6 cycles/min)	I_{max}: **7.0 A**
Contact material	**AgSnO2 + 0.2 µm Au**
External contact fuse protection (I_K = 1 kA) to **EN 60947-5-1**	
Blow-out fuse, quick	
Safety contacts:	**10 A**
Safety contacts, delayed:	**10 A**
Auxiliary contacts:	**10 A**
Blow-out fuse, slow	
Safety contacts:	**6 A**
Safety contacts, delayed:	**6 A**
Auxiliary contacts:	**6 A**
Circuit breaker 24 VAC/DC, characteristic B/C	
Safety contacts:	**6 A**
Safety contacts, delayed:	**6 A**
Auxiliary contacts:	**6 A**
Max. overall cable resistance R_{lmax} input circuits, reset circuits	
single-channel at U_B DC	**100 Ohm** No. 777520, 777522, 777525, 787520, 787522 **150 Ohm** No. 777530, 777532, 777538, 787530, 787532, 787538
single-channel at U_B AC	**150 Ohm** No. 777530, 777532, 777538, 787530, 787532, 787538
dual-channel without detect. of shorts across contacts at U_B DC	**120 Ohm** No. 777520, 777522, 777525, 787520, 787522 **200 Ohm** No. 777530, 777532, 777538, 787530, 787532, 787538
dual-channel without detect. of shorts across contacts at U_B AC	**200 Ohm** No. 777530, 777532, 777538, 787530, 787532, 787538
dual-channel with detect. of shorts across contacts at U_B DC	**10 Ohm** No. 777520, 777522, 777525, 787520, 787522 **20 Ohm** No. 777530, 777532, 777538, 787530, 787532, 787538
dual-channel with detect. of shorts across contacts at U_B AC	**20 Ohm** No. 777530, 777532, 777538, 787530, 787532, 787538

Pilz GmbH & Co. KG, Felix-Wankel-Straße 2, 73760 Ostfildern, Germany
Telephone: +49 711 3409-0, Telefax: +49 711 3409-133, E-Mail: pilz.gmbh@pilz.de

Up to PL e of EN ISO 13849-1
PNOZ XV3.1P

Safety-related characteristic data	
PL in accordance with **EN ISO 13849-1: 2006**	
Safety contacts, instantaneous	**PL e** (**Cat. 4**)
Safety contacts, delayed <30 s	**PL d** (**Cat. 3**)
Safety contacts, delayed ≥30 s	**PL c** (**Cat. 1**)
Category in accordance with **EN 954-1**	
Safety contacts, instantaneous	**Cat. 4**
Safety contacts, delayed <30 s	**Cat. 3**
Safety contacts, delayed ≥30 s	**Cat. 1**
SIL CL in accordance with **EN IEC 62061**	
Safety contacts, instantaneous	**SIL CL 3**
Safety contacts, delayed <30 s	**SIL CL 3**
Safety contacts, delayed ≥30 s	**SIL CL 1**
PFH in accordance with **EN IEC 62061**	
Safety contacts, instantaneous	**2.31E-09**
Safety contacts, delayed <30 s	**2.64E-09**
Safety contacts, delayed ≥30 s	**2.87E-09**
SIL in accordance with **IEC 61511**	
Safety contacts, instantaneous	**SIL 3**
Safety contacts, delayed <30 s	**SIL 3**
Safety contacts, delayed ≥30 s	**SIL 2**
PFD in accordance with **IEC 61511**	
Safety contacts, instantaneous	**2.03E-06**
Safety contacts, delayed <30 s	**1.26E-05**
Safety contacts, delayed ≥30 s	**4.64E-05**
T_M [year] in accordance with **EN ISO 13849-1: 2006**	**20**
Times	
Switch-on delay	
with automatic reset typ.	**400 ms**
with automatic reset max.	**550 ms** No. 777530, 777532, 777538, 787530, 787532, 787538 **850 ms** No. 777520, 777522, 777525, 787520, 787522
with automatic reset after power on typ.	**400 ms** No. 777520, 777522, 777525, 787520, 787522 **625 ms** No. 777530, 777532, 777538, 787530, 787532, 787538
with automatic reset after power on max.	**870 ms**
on monitored reset with rising edge typ.	**35 ms** No. 777530, 777532, 777538, 787530, 787532, 787538 **40 ms** No. 777520, 777522, 777525, 787520, 787522
on monitored reset with rising edge max.	**60 ms** No. 777530, 777532, 777538, 787530, 787532, 787538 **70 ms** No. 777520, 777522, 777525, 787520, 787522
Delay-on de-energisation	
with E-STOP typ.	**15 ms**
with E-STOP max.	**30 ms**
with power failure typ.	**110 ms** No. 777520, 777522, 777525, 787520, 787522
with power failure max.	**150 ms** No. 777520, 777522, 777525, 787520, 787522
with power failure typ. U_B AC/DC: **24 V** No. 777530, 777532, 777538, 787530, 787532, 787538	**90 ms** No. 777530, 777532, 777538, 787530, 787532, 787538
with power failure max. U_B AC/DC: **24 V** No. 777530, 777532, 777538, 787530, 787532, 787538	**250 ms** No. 777530, 777532, 777538, 787530, 787532, 787538
with power failure typ. U_B AC : **240 V**	**815 ms** No. 777530, 777532, 777538, 787530, 787532, 787538
with power failure max. U_B AC : **240 V**	**1900 ms** No. 777530, 777532, 777538, 787530, 787532, 787538
Recovery time at max. switching frequency 1/s	
after E-STOP	**50 ms +tv**
after power failure	**200 ms** No. 777520, 777522, 777525, 787520, 787522
after power failure on universal power supply	**2000 ms** No. 777530, 777532, 777538, 787530, 787532, 787538

Up to PL e of EN ISO 13849-1
PNOZ XV3.1P

Times	
Delay time t_V: selectable	**0,00 s**; **0,50 s**; **1,00 s**; **2,00 s**; **4,00 s**; **6,00 s**; **8,00 s**; **10,00 s**; **15,00 s**; **20,00 s**; **25,00 s**; **30,00 s** No. 777520 **0,10 s**; **0,20 s**; **0,30 s**; **0,40 s**; **0,50 s**; **0,60 s**; **0,70 s**; **0,80 s**; **1,00 s**; **1,50 s**; **2,00 s**; **3,00 s** No. 777522 **0,00 s**; **0,50 s**; **1,00 s**; **2,00 s**; **4,00 s**; **6,00 s**; **8,00 s**; **10,00 s**; **15,00 s**; **20,00 s**; **25,00 s**; **30,00 s** No. 777530 **0,10 s**; **0,20 s**; **0,30 s**; **0,40 s**; **0,50 s**; **0,60 s**; **0,70 s**; **0,80 s**; **1,00 s**; **1,50 s**; **2,00 s**; **3,00 s** No. 777532 **0,00 s**; **5,00 s**; **10,00 s**; **20,00 s**; **40,00 s**; **60,00 s**; **80,00 s**; **100,00 s**; **150,00 s**; **200,00 s**; **250,00 s**; **300,00 s** No. 777538 **0,00 s**; **0,50 s**; **1,00 s**; **2,00 s**; **4,00 s**; **6,00 s**; **8,00 s**; **10,00 s**; **15,00 s**; **20,00 s**; **25,00 s**; **30,00 s** No. 787520 **0,10 s**; **0,20 s**; **0,30 s**; **0,40 s**; **0,50 s**; **0,60 s**; **0,70 s**; **0,80 s**; **1,00 s**; **1,50 s**; **2,00 s**; **3,00 s** No. 787522 **0,00 s**; **0,50 s**; **1,00 s**; **2,00 s**; **4,00 s**; **6,00 s**; **8,00 s**; **10,00 s**; **15,00 s**; **20,00 s**; **25,00 s**; **30,00 s** No. 787530 **0,10 s**; **0,20 s**; **0,30 s**; **0,40 s**; **0,50 s**; **0,60 s**; **0,70 s**; **0,80 s**; **1,00 s**; **1,50 s**; **2,00 s**; **3,00 s** No. 787532 **0,00 s**; **5,00 s**; **10,00 s**; **20,00 s**; **40,00 s**; **60,00 s**; **80,00 s**; **100,00 s**; **150,00 s**; **200,00 s**; **250,00 s**; **300,00 s** No. 787538
Delay time t_V: fixed	**3.00 s** No. 777525
Repetition accuracy	**2 %**
Time accuracy	**-15 %/+15 % +50 ms**
Waiting period with a monitored reset with rising edge	**300 ms**
Min. start pulse duration with a monitored reset with rising edge	**30 ms**
Simultaneity, channel 1 and 2	∞
Supply interruption before de-energisation	**20 ms**
Environmental data	
EMC	**EN 60947-5-1**, **EN 61000-6-2**, **EN 61000-6-4**
Vibration to **EN 60068-2-6**	
Frequency	**10 - 55 Hz**
Amplitude	**0.35 mm**
Climatic suitability	**EN 60068-2-78**
Airgap creepage in accordance with **EN 60947-1**	
Pollution degree	**2**
Overvoltage category	**III**
Rated insulation voltage	**250 V**
Rated impulse withstand voltage	**4.00 kV**
Ambient temperature	**-10 - 55 °C**
Storage temperature	**-40 - 85 °C**
Protection type	
Mounting (e.g. cabinet)	**IP54**
Housing	**IP40**
Terminals	**IP20**
Mechanical data	
Housing material	
Housing	**PPO UL 94 V0**
Front	**ABS UL 94 V0**
Cross section of external conductors with screw terminals	
1 core flexible	**0.25 - 2.50 mm² , 24 - 12 AWG** No. 777520, 777522, 777525, 777530, 777532, 777538
2 core, same cross section, flexible:	
with crimp connectors, without insulating sleeve	**0.25 - 1.00 mm² , 24 - 16 AWG** No. 777520, 777522, 777525, 777530, 777532, 777538
without crimp connectors or with TWIN crimp connectors	**0.20 - 1.50 mm² , 24 - 16 AWG** No. 777520, 777522, 777525, 777530, 777532, 777538
Torque setting with screw terminals	**0.50 Nm** No. 777520, 777522, 777525, 777530, 777532, 777538

Pilz GmbH & Co. KG, Felix-Wankel-Straße 2, 73760 Ostfildern, Germany
Telephone: +49 711 3409-0, Telefax: +49 711 3409-133, E-Mail: pilz.gmbh@pilz.de

Up to PL e of EN ISO 13849-1
PNOZ XV3.1P

Mechanical data	
Cross section of external conductors with spring-loaded terminals: Flexible with/without crimp connectors	**0.20 - 1.50 mm² , 24 - 16 AWG** No. 787520, 787522, 787530, 787532, 787538
Spring-loaded terminals: Terminal points per connection	**2** No. 787520, 787522, 787530, 787532, 787538
Stripping length	**8 mm** No. 787520, 787522, 787530, 787532, 787538
Dimensions	
Height	**101.0 mm** No. 787520, 787522, 787530, 787532, 787538 **94.0 mm** No. 777520, 777522, 777525, 777530, 777532, 777538
Width	**90.0 mm**
Depth	**121.0 mm**
Weight	**500 g** No. 787520, 787522 **510 g** No. 777520, 777522, 777525 **570 g** No. 787530, 787532, 787538 **580 g** No. 777530, 777532, 777538

No. stands for order number.

It is essential to consider the relay's service life graphs. The relay outputs' safety-related characteristic data is only valid if the values in the service life graphs are met.

The PFH value depends on the switching frequency and the load on the relay output.
If the service life graphs are not accessible, the stated PFH value can be used irrespective of the switching frequency and the load, as the PFH value already considers the relay's B10d value as well as the failure rates of the other components.

All the units used within a safety function must be considered when calculating the safety characteristic data.

INFORMATION
A safety function's SIL/PL values are **not** identical to the SIL/PL values of the units that are used and may be different. We recommend that you use the PAScal software tool to calculate the safety function's SIL/PL values.

The standards current on **2008-07** apply.

Conventional thermal current while loading several contacts

Number of contacts	I_{th} per contact at U_B DC	I_{th} at U_B AC
1	**8.00 A**	**8.00 A** No. 777530, 777532, 777538, 787530, 787532, 787538
2	**7.80 A**	**7.80 A** No. 777530, 777532, 777538, 787530, 787532, 787538
3	**6.50 A**	**6.50 A** No. 777530, 777532, 777538, 787530, 787532, 787538
4	**5.50 A**	**5.50 A** No. 777530, 777532, 777538, 787530, 787532, 787538
5	**5.00 A**	**5.00 A** No. 777530, 777532, 777538, 787530, 787532, 787538

Pilz GmbH & Co. KG, Felix-Wankel-Straße 2, 73760 Ostfildern, Germany
Telephone: +49 711 3409-0, Telefax: +49 711 3409-133, E-Mail: pilz.gmbh@pilz.de

Up to PL e of EN ISO 13849-1
PNOZ XV3.1P

Order reference

Type	Features			Terminals	Order no.
PNOZ XV3.1P C		24 VDC	30 s selectable	Spring-loaded terminals	787 520
PNOZ XV3.1P		24 VDC	30 s selectable	Screw terminals	777 520
PNOZ XV3.1P C		24 VDC	3 s selectable	Spring-loaded terminals	787 522
PNOZ XV3.1P		24 VDC	3 s selectable	Screw terminals	777 522
PNOZ XV3.1P		24 VDC	3 s fixed	Screw terminals	777 525
PNOZ XV3.1P C	24 - 240 VAC/DC		30 s selectable	Spring-loaded terminals	787 530
PNOZ XV3.1P	24 - 240 VAC/DC		30 s selectable	Screw terminals	777 530
PNOZ XV3.1P C	24 - 240 VAC/DC		3 s selectable	Spring-loaded terminals	787 532
PNOZ XV3.1P	24 - 240 VAC/DC		3 s selectable	Screw terminals	777 532
PNOZ XV3.1P C	24 - 240 VAC/DC		300 s selectable	Spring-loaded terminals	787 538
PNOZ XV3.1P	24 - 240 VAC/DC		300 s selectable	Screw terminals	777 538

Pilz GmbH & Co. KG, Felix-Wankel-Straße 2, 73760 Ostfildern, Germany
Telephone: +49 711 3409-0, Telefax: +49 711 3409-133, E-Mail: pilz.gmbh@pilz.de

Up to Category 4, EN 954-1
PMUT X1P

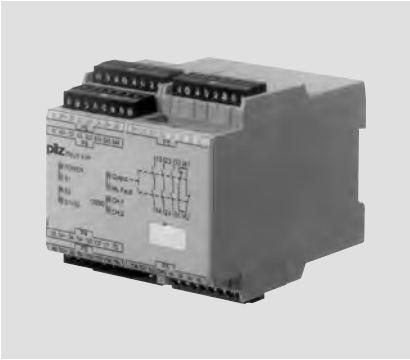

Unit for the temporary suspension of safety functions (muting)

Approvals

	PMUT X1P
c UL us LISTED	◆
TÜV SÜD	◆
CCC	◆

Unit features

- Positive-guided relay outputs:
  - 3 safety contacts (N/O), instantaneous
  - 1 auxiliary contact (N/C), instantaneous
- 4 inputs for muting sensors
- 1 ESPE input (2channel)
- 1 input for additional safety light barrier (dual-channel) or safety contacts
- 2 muting lamps
- Connection options for
  - Reset button
  - Key switch
  - Feedback loop
- Monitors muting lamps
- Muting mode: sequential or parallel
- LED indicators for
  - Switch status channel 1/2
  - Muting sensors
  - Light barrier
  - Simultaneity requirement
  - Muting lamp error
- Semiconductor outputs signal:
  - Switch status channel 1/2
  - Muting active
  - One of the muting lamps defective
  - Both muting lamps defective
  - Light barrier (ESPE) active
- Plug-in connection terminals (either spring-loaded terminal or screw terminal)
- See order reference for unit types

Unit description

The muting controller meets the requirements of EN 60204-1.
It may be used in safety circuits which temporarily suspend safety functions (muting), in accordance with EN 61496-1.

Safety features

The relay meets the following safety requirements:

- The circuit is redundant with built-in self-monitoring.
- The safety function remains effective in the case of a component failure.
- The correct opening and closing of the safety function relays is tested automatically in each on-off cycle.

Block diagram

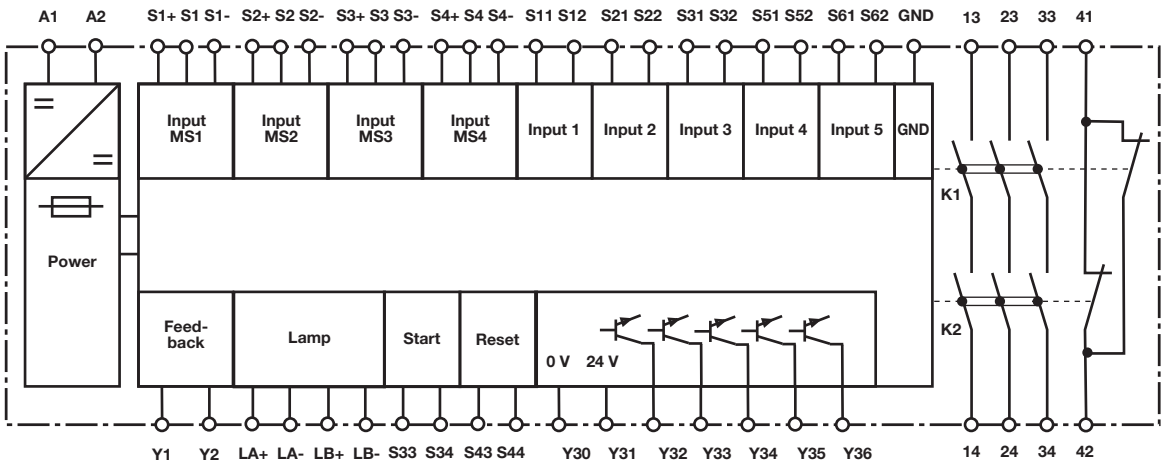

Pilz GmbH & Co. KG, Felix-Wankel-Straße 2, 73760 Ostfildern, Germany
Telephone: +49 711 3409-0, Telefax: +49 711 3409-133, E-Mail: pilz.gmbh@pilz.de

Up to Category 4, EN 954-1
PMUT X1P

Function description

- Dual-channel operation (contact or semiconductor outputs from ESPE) without detection of shorts between contacts
- Dual-channel operation (contact or semiconductor outputs from ESPE) with detection of shorts between contacts: Redundant input circuit, earth faults in the input circuit or shorts between the input circuits are detected.
- Monitored manual reset. Supply voltage must be present before the reset contact is closed. The unit is not active until the reset button has been operated.

Timing diagram

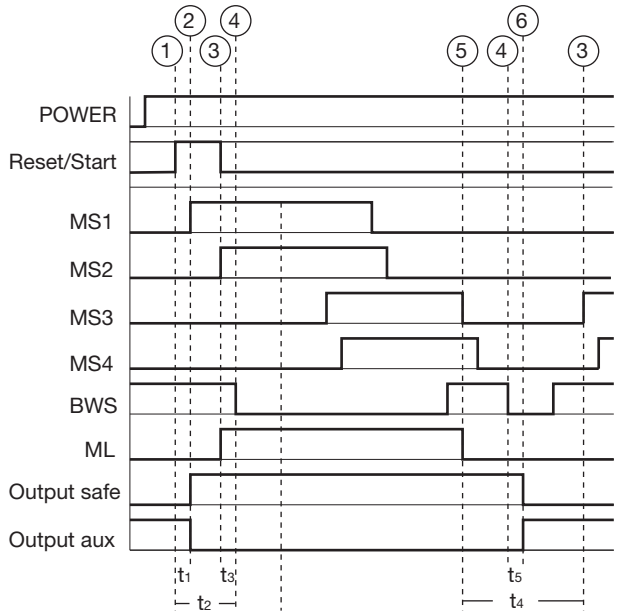

Key

- Power: Supply voltage
- Reset/start: Reset button
- ESPE: Light barrier
- MS1 ... MS2: Muting sensors
- ML: Muting lamps
- Output Safe: Safety contacts 13-14, 23-24, 33-34
- Output aux: Auxiliary contact 41-42
- ①: Operate reset button
- ②: Close safety contacts
- ③: Muting on
- ④: Light barrier interrupted
- ⑤: Muting off
- ⑥: Open safety contacts
- t_1: Switch-on delay of safety contacts
- t_2: Minimum start pulse duration
- t_3: Minimum period before light barrier may be interrupted
- t_4: Recovery time after muting off
- t_5: Delay-on de-energisation

Wiring

Please note:

- Information given in the “Technical details” must be followed.
- Outputs 13-14, 23-24, 33-34 are safety contacts, output 41-42 is an auxiliary contact (e.g. for display).
- To prevent contact welding, a fuse should be connected before the output contacts (see technical details).
- Calculation of the max. cable runs I_{max} in the input circuit:

$$I_{max} = \frac{R_{lmax}}{R_l / km}$$

R_{lmax} = max. overall cable resistance (see technical details)
R_l /km = cable resistance/km

- Use copper wire that can withstand 60/75 °C.
- Sufficient fuse protection must be provided on all output contacts with capacitive and inductive loads.
- Mechanical and optoelectronic sensors (safety light barriers, safety light guards) are suitable for use.
- The safety contacts can be used to shutdown the hazardous movement.
- Only safe contact outputs (e.g. from safety light barriers) may be used on S51-S52 and S61-S62. Do **not** connect safety light barriers to semiconductor outputs.

Pilz GmbH & Co. KG, Felix-Wankel-Straße 2, 73760 Ostfildern, Germany
Telephone: +49 711 3409-0, Telefax: +49 711 3409-133, E-Mail: pilz.gmbh@pilz.de

Up to Category 4, EN 954-1
PMUT X1P

Preparing for operation

- Supply voltage

Supply voltage	AC	DC
		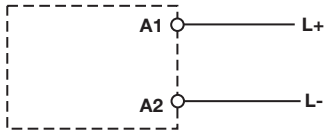

- Input circuit

Input circuit	Semiconductor	Contacts
Muting sensors	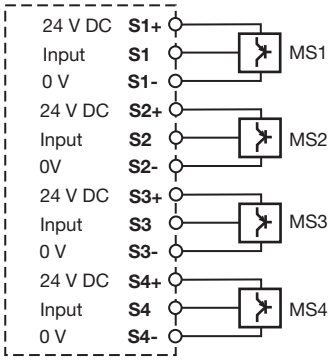	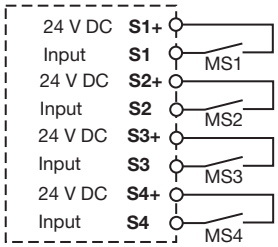
Light beam device (ESPE) Semiconductor output 2 x PNP Light beam device detects shorts across contacts	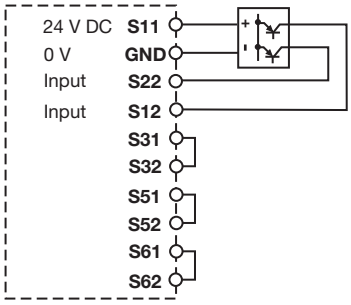	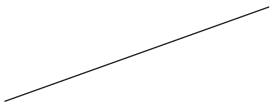
Light beam device (ESPE) Semiconductor output PNP/NPN Detection of shorts across contacts; - Semiconductor: via light beam device - Contacts: via PMUT X1P	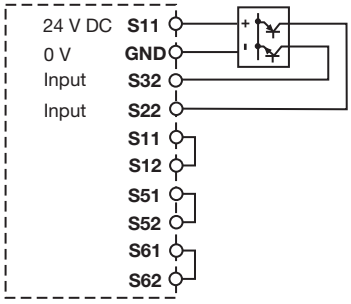	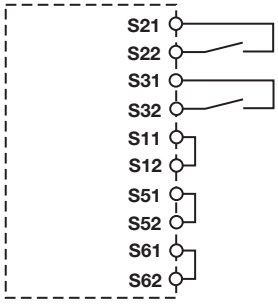
Additional light beam device, dual-channel, E-STOP pushbutton	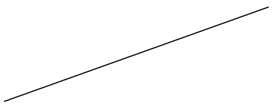	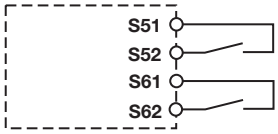

Up to Category 4, EN 954-1
PMUT X1P

▸ Reset circuit

S1: Key switch S3: Reset button	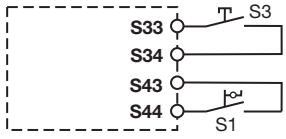

▸ Feedback circuit

Feedback circuit	Link	Contacts in series to feedback loop
		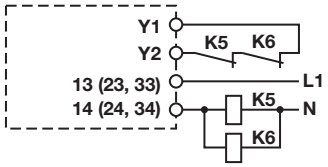

▸ Semiconductor output

Y32: Light beam device active Y33: Muting active Y34: Muting lamp warning Y35: Both muting lamps defective Y36: Safety contacts closed	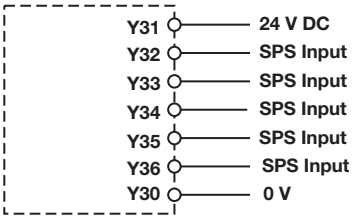

Pilz GmbH & Co. KG, Felix-Wankel-Straße 2, 73760 Ostfildern, Germany
Telephone: +49 711 3409-0, Telefax: +49 711 3409-133, E-Mail: pilz.gmbh@pilz.de

Up to Category 4, EN 954-1
PMUT X1P

Terminal configuration

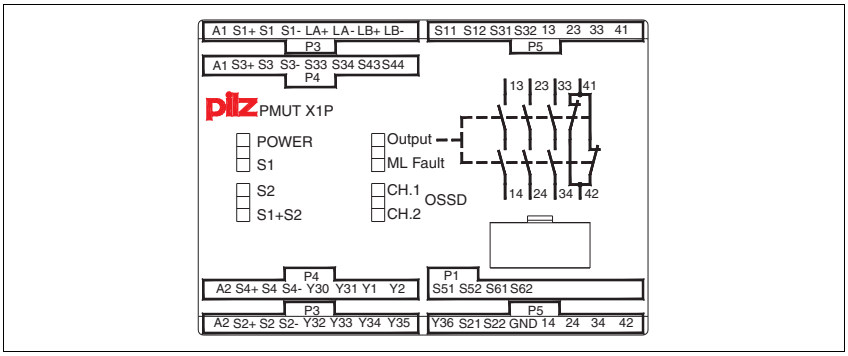

Installation

- The safety relay should be installed in a control cabinet with a protection type of at least IP54.
- Use the notch on the rear of the unit to attach it to a DIN rail.
- Ensure the unit is mounted securely on a vertical DIN rail (35 mm) by using a fixing element (e.g. retaining bracket or an end angle).

Dimensions

* with spring-loaded terminals

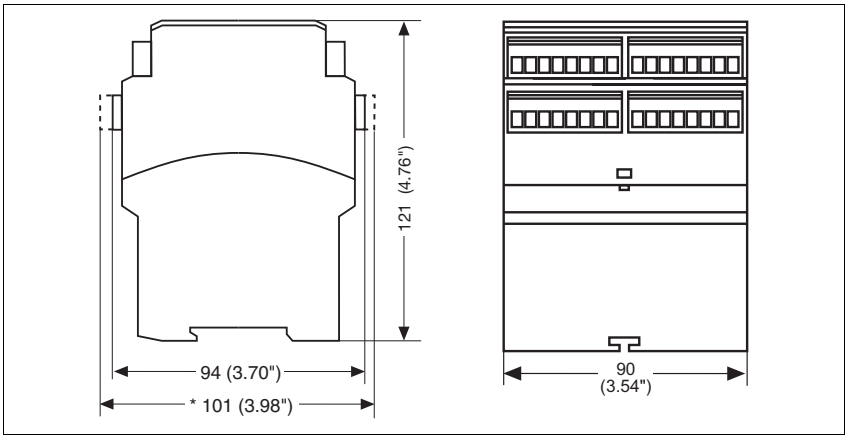

Up to Category 4, EN 954-1
PMUT X1P

Notice

This data sheet is only intended for use during configuration. Please refer to the operating manual for installation and operation.

Service life graph

The service life graphs indicate the number of cycles from which failures due to wear must be expected. The wear is mainly caused by the electrical load; the mechanical load is negligible.

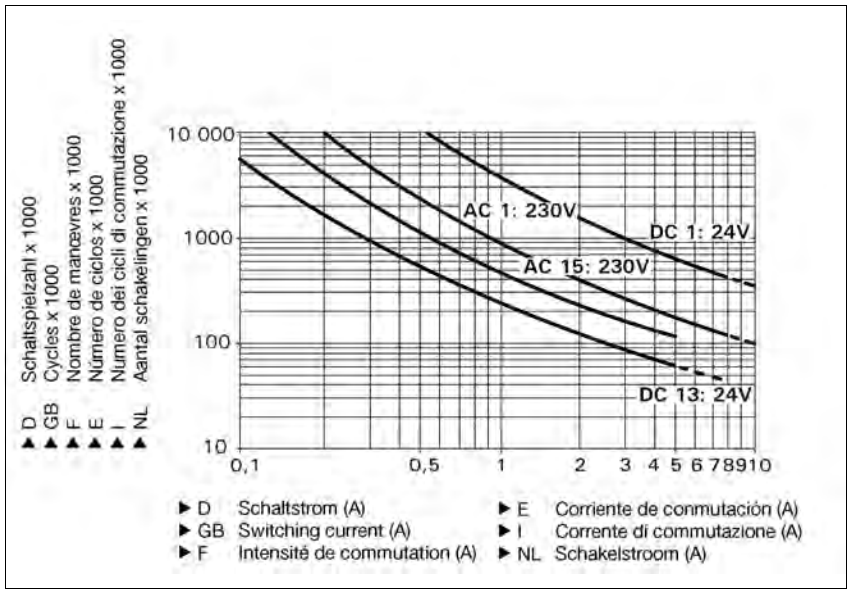

Example
- Inductive load: 0,2 A
- Utilisation category: AC15
- Contact service life: 4,000,000 cycles

Provided the application requires fewer than 4,000,000 cycles, the PFH value (see technical details) can be used in the calculation.

To increase the service life, sufficient spark suppression must be provided on all output contacts. With capacitive loads, any power surges that occur must be noted. With contactors, use freewheel diodes for spark suppression.

Technical details

Electrical data	
Supply voltage	
Supply voltage U_B DC	**24 V**
Voltage tolerance	**-15 %/+10 %**
Power consumption at U_B DC	**6.0 W**
Residual ripple DC	**48 %**
Voltage and current at	
Input circuit DC: **24.0 V**	**25.0 mA**
Reset circuit DC: **24.0 V**	**40.0 mA**
Feedback loop DC: **24.0 V**	**40.0 mA**
Muting lamp DC: **24.0 V**	**max. 500 mA**
Muting lamp LED DC: **24,0 V**	**> 40 mA**
Muting sensor DC: **24.0 V**	**40 mA**

Pilz GmbH & Co. KG, Felix-Wankel-Straße 2, 73760 Ostfildern, Germany
Telephone: +49 711 3409-0, Telefax: +49 711 3409-133, E-Mail: pilz.gmbh@pilz.de

Up to Category 4, EN 954-1
PMUT X1P

Electrical data	
Max. power consumption	
Muting sensors	**5 W**
Light barrier	**10 W**
Muting lamp	**12 W**
Muting lamp LED	**> 0,96 W**
Number of output contacts	
Safety contacts (S) instantaneous:	**3**
Auxiliary contacts (N/C):	**1**
Utilisation category in accordance with **EN 60947-4-1**	
Safety contacts: AC1 at **240 V**	I_{min}: **0.01 A** , I_{max}: **8.0 A** P_{max}: **2000 VA**
Safety contacts: DC1 at **24 V**	I_{min}: **0.01 A** , I_{max}: **8.0 A** P_{max}: **200 W**
Auxiliary contacts: AC1 at **240 V**	I_{min}: **0.01 A** , I_{max}: **8.0 A** P_{max}: **2000 VA**
Auxiliary contacts: DC1 at **24 V**	I_{min}: **0.01 A** , I_{max}: **8.0 A** P_{max}: **200 W**
Utilisation category in accordance with **EN 60947-5-1**	
Safety contacts: AC15 at **240 V**	I_{max}: **5.0 A**
Safety contacts: DC13 at **24 V** (6 cycles/min)	I_{max}: **5.0 A**
Auxiliary contacts: AC15 at **230 V**	I_{max}: **5.0 A**
Auxiliary contacts: DC13 at **24 V** (6 cycles/min)	I_{max}: **5.0 A**
Contact material	**AgSnO2 + 0.2 µm Au**
External contact fuse protection (I_K = 1 kA) to **EN 60947-5-1**	
Blow-out fuse, quick	
Safety contacts:	**10 A**
Auxiliary contacts:	**10 A**
Blow-out fuse, slow	
Safety contacts:	**6 A**
Auxiliary contacts:	**6 A**
Circuit breaker 24 VAC/DC, characteristic B/C	
Safety contacts:	**6 A**
Auxiliary contacts:	**6 A**
Semiconductor outputs (short circuit proof)	**24.0 V** DC, **20 mA**
External supply voltage	**24.0 V** DC
Voltage tolerance	**-20 %/+20 %**
Max. overall cable resistance R_{lmax} input circuits, reset circuits	
dual-channel without detect. of shorts across contacts at U_B DC	**70 Ohm**
dual-channel with detect. of shorts across contacts at U_B DC	**15 Ohm**
Min. input resistance when switching on	**460 Ohm**
Times	
Switch-on delay	
on monitored reset with rising edge typ.	**40 ms**
on monitored reset with rising edge max.	**80 ms**
Muting typ.	**35 ms**
Muting max.	**80 ms**
Muting lamp 1, typ.	**25 ms**
Muting lamp 1, max.	**30 ms**
Muting lamp 2	**60 ms**

Up to Category 4, EN 954-1
PMUT X1P

Times	
Delay-on de-energisation	
with E-STOP typ.	**8 ms**
with E-STOP max.	**20 ms**
with power failure typ.	**490 ms**
with power failure max.	**700 ms**
with power failure during muting typ.	**125 ms**
with power failure during muting max.	**180 ms**
after the safety function is triggered, typ.	**15 ms**
after the safety function is triggered, max.	**20 ms**
Recovery time at max. switching frequency 1/s	
after E-STOP	**320 ms**
after power failure	**1 s**
after muting sensors off	**300 ms**
Waiting period with a monitored reset	
with rising edge	**300 ms**
Min. start pulse duration with a monitored reset	
with rising edge	**40 ms**
Simultaneity, channel 1 and 2	**3 s**
Supply interruption before de-energisation	**20 ms**
Supply interruption before de-energisation in the input circuit	**5.0 ms**
Environmental data	
EMC	**EN 61000-6-2**, **EN 61496-1**
Vibration to **EN 60068-2-6**	
Frequency	**10 - 55 Hz**
Amplitude	**0.35 mm**
Climatic suitability	**EN 60068-2-78**
Airgap creepage in accordance with **EN 60947-1**	
Pollution degree	**2**
Overvoltage category	**III / II**
Ambient temperature	**-10 - 55 °C**
Storage temperature	**-40 - 85 °C**
Protection type	
Mounting (e.g. cabinet)	**IP54**
Housing	**IP40**
Terminals	**IP20**
Mechanical data	
Housing material	
Housing	**PPO UL 94 V0**
Front	**ABS UL 94 V0**
Cross section of external conductors with screw terminals	
1 core flexible	**0.20 - 2.50 mm² , 24 - 12 AWG** No. 778010
2 core, same cross section, flexible:	
with crimp connectors, without insulating sleeve	**0.20 - 1.00 mm² , 24 - 16 AWG** No. 778010
without crimp connectors or with TWIN crimp connectors	**0.20 - 1.50 mm² , 24 - 16 AWG** No. 778010
Torque setting with screw terminals	**0.50 Nm** No. 778010
Cross section of external conductors with spring-loaded terminals: Flexible with/without crimp connectors	**0.20 - 1.50 mm² , 24 - 16 AWG** No. 788010
Spring-loaded terminals: Terminal points per connection	**2** No. 788010
Stripping length	**8 mm** No. 788010
Dimensions	
Height	**101.0 mm** No. 788010 **94.0 mm** No. 778010
Width	**90.0 mm**
Depth	**121.0 mm**
Weight	**550 g** No. 788010 **567 g** No. 778010

Pilz GmbH & Co. KG, Felix-Wankel-Straße 2, 73760 Ostfildern, Germany
Telephone: +49 711 3409-0, Telefax: +49 711 3409-133, E-Mail: pilz.gmbh@pilz.de

Up to Category 4, EN 954-1
PMUT X1P

No. stands for order number.

The standards current on **2007-01** apply.

Conventional thermal current while loading several contacts

Number of contacts	I_{th} per contact at U_B DC
1	**8.00 A**
2	**6.00 A**
3	**5.00 A**

Order reference

Type	Features		Terminals	Order no.
PMUT X1P C		24 VDC	Spring-loaded terminals	788 010
PMUT X1P		24 VDC	Screw terminals	778 010

Up to PL e of EN ISO 13849-1
P2HZ X1P

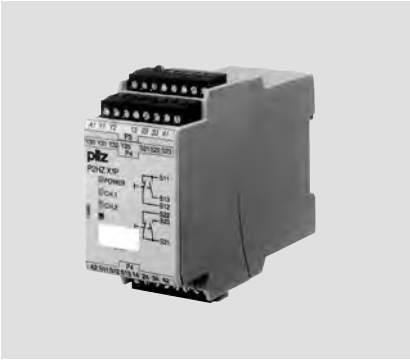

Two-hand control unit for press controllers and safety circuits

Approvals

	P2HZ X1P
c UL us LISTED	◆
	◆
	◆

Unit features

- Positive-guided relay outputs:
  - 3 safety contacts (N/O), instantaneous
  - 1 auxiliary contact (N/C), instantaneous
- 2 semiconductor outputs
- Connection options for:
  - 2 operator elements (buttons)
- LED indicator for:
  - Switch status channel 1/2
  - Supply voltage
- Semiconductor outputs signal:
  - Switch status channel 1/2
  - Supply voltage is present
- Plug-in connection terminals (either spring-loaded terminal or screw terminal)
- See order reference for unit types

Unit Description

The two-hand control relay meets the requirements of EN 574 Type IIIC. It forces the operator to keep his hands outside the danger zone area during the hazardous movement. The unit is suitable for use on controllers for metalworking presses as a component for simultaneous switching.

It can be used in applications with
- Mechanical presses (EN 692)
- Hydraulic presses (EN 693)
- Safety circuits in accordance with EN 60204-1

Safety features

The two-hand control relay meets the following safety requirements:
- The circuit is redundant with built-in self-monitoring
- The safety function remains effective in the case of a component failure
- The circuit prevents a further press stroke in the case of:
  - Relay failure
  - Contact welding
  - Coil defect on a relay
  - Open circuit
  - Short circuit

Block diagram

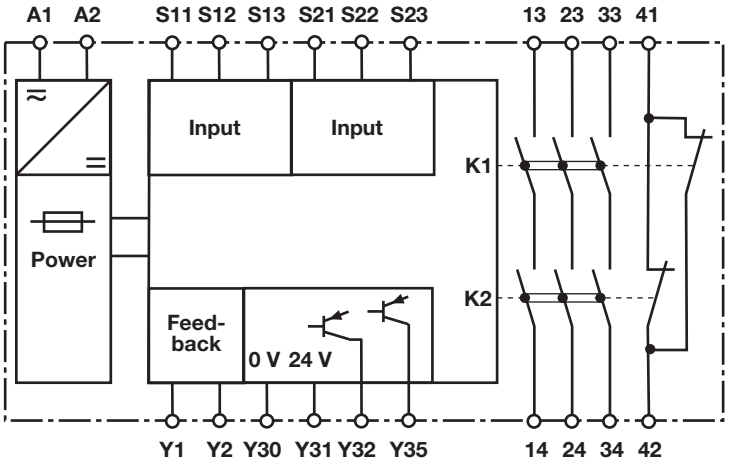

Pilz GmbH & Co. KG, Felix-Wankel-Straße 2, 73760 Ostfildern, Germany
Telephone: +49 711 3409-0, Telefax: +49 711 3409-133, E-Mail: pilz.gmbh@pilz.de

Up to PL e of EN ISO 13849-1
P2HZ X1P

Function description

- The two-hand control relay must be activated by simultaneously pressing two buttons within **500 ms**. If one or both of the buttons are released, the unit interrupts the control command for the hazardous movement.
- Reactivation: The output relays will not re-energise until both operator elements have been released and then re-operated simultaneously.

Timing diagram

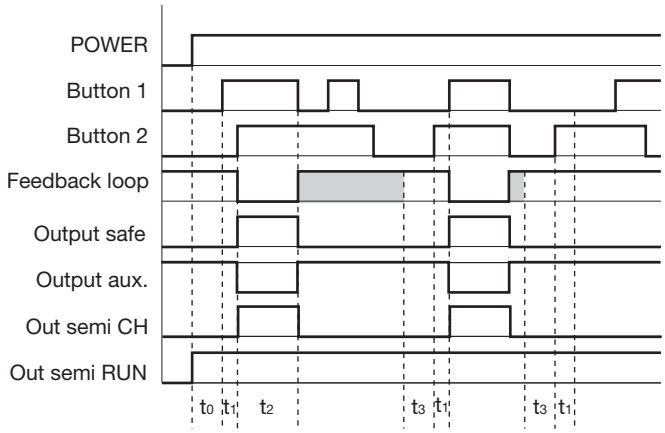

Key

- POWER: Supply voltage
- Button 1/Button 2: Input circuits S11-S12-S13, S21-S22-S23
- Feedback loop: Feedback loop Y1-Y2
- Output safe: Safety outputs 13-14, 23-24, 33-34
- Output aux: Auxiliary contacts 41-42
- Out semi RUN: Semiconductor output for operational readiness Y35
- Out semi CH: Semiconductor output switch status Y32
- t_0: Recovery time after power on
- t_1: Simultaneity, channel 1 and 2
- t_2: Operating cycle ended through button 1 or 2
- t_3: Y1-Y2 must be closed before before the button is operated (recovery time)

Shaded area: Status irrelevant

Wiring

Please note:

- Information given in the “Technical details” must be followed.
- Outputs 13-14, 23-24, 33-34 are safety contacts, output 41-42 is an auxiliary contact (e.g. for display).
- To prevent contact welding, a fuse should be connected before the output contacts (see technical details).
- Calculation of the max. cable runs I_{max} in the input circuit:

$$I_{max} = \frac{R_{lmax}}{R_l / km}$$

R_{lmax} = max. overall cable resistance (see technical details)
R_l /km = cable resistance/km

- Use copper wire that can withstand 60/75 °C.
- Sufficient fuse protection must be provided on all output contacts with capacitive and inductive loads.

Pilz GmbH & Co. KG, Felix-Wankel-Straße 2, 73760 Ostfildern, Germany
Telephone: +49 711 3409-0, Telefax: +49 711 3409-133, E-Mail: pilz.gmbh@pilz.de

Up to PL e of EN ISO 13849-1
P2HZ X1P

Preparing for operation

▸ Supply voltage

Supply voltage	AC	DC
	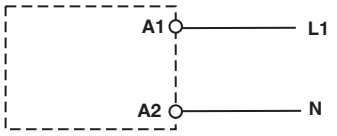	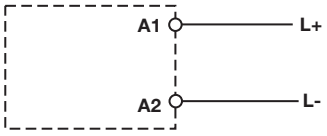

▸ Input circuit

Input circuit	Single-channel	Dual-channel
Two-hand button **with** detection of shorts across contacts	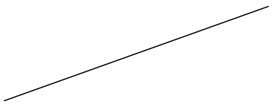	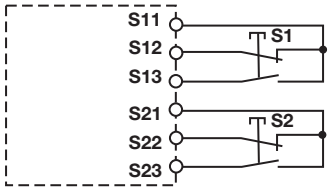

▸ Feedback loop

Feedback loop	
Contacts from external contactors	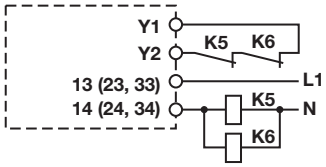

▸ Semiconductor output

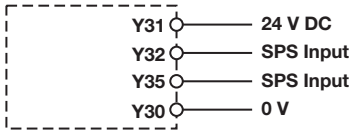

▸ Key

S1/S2	Two-hand button

Pilz GmbH & Co. KG, Felix-Wankel-Straße 2, 73760 Ostfildern, Germany
Telephone: +49 711 3409-0, Telefax: +49 711 3409-133, E-Mail: pilz.gmbh@pilz.de

Up to PL e of EN ISO 13849-1
P2HZ X1P

Terminal configuration

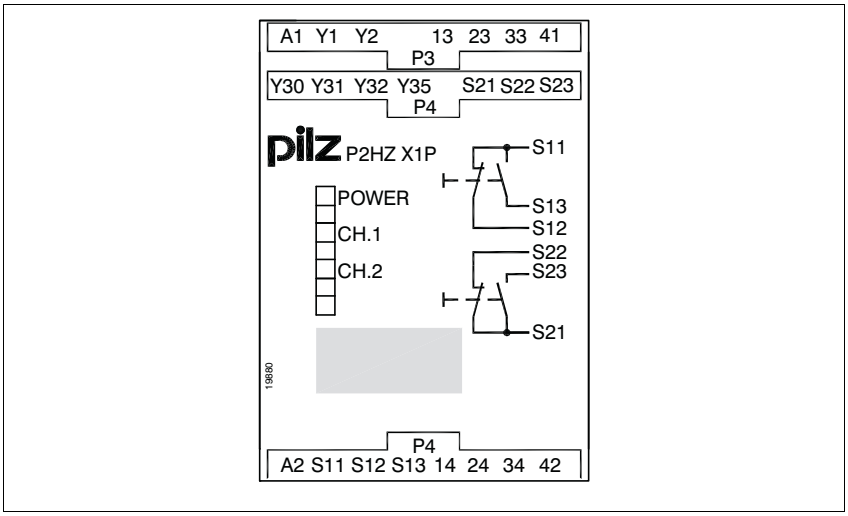

Installation

- The safety relay should be installed in a control cabinet with a protection type of at least IP54.
- Use the notch on the rear of the unit to attach it to a DIN rail.
- Ensure the unit is mounted securely on a vertical DIN rail (35 mm) by using a fixing element (e.g. retaining bracket or an end angle).

Notice
The distance of the button connected to the two-hand relay from the nearest danger zone must be large enough that if one of the buttons is released, the dangerous moment is interrupted before the operator can reach into the danger zone (see EN 999 “The positioning of protective equipment in respect of approach speeds of parts of the human body”).

Dimensions

* with spring-loaded terminals

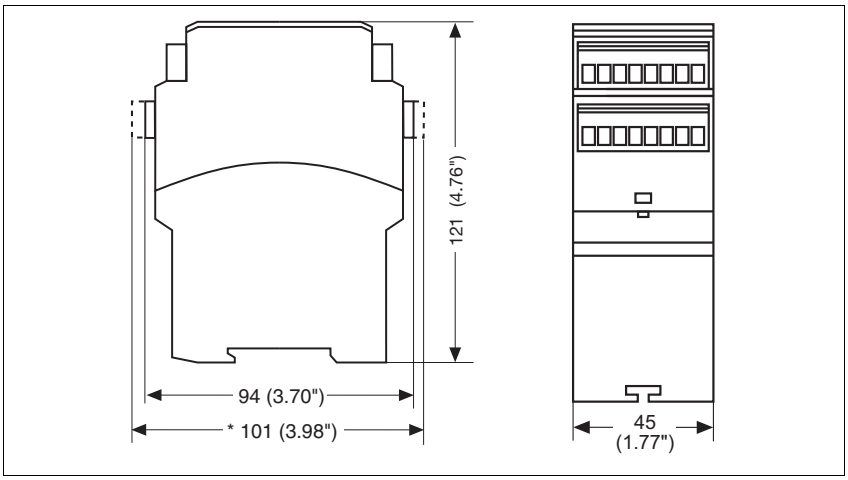

Up to PL e of EN ISO 13849-1
P2HZ X1P

Notice

This data sheet is only intended for use during configuration. Please refer to the operating manual for installation and operation.

Service life graph

The service life graphs indicate the number of cycles from which failures due to wear must be expected. The wear is mainly caused by the electrical load; the mechanical load is negligible.

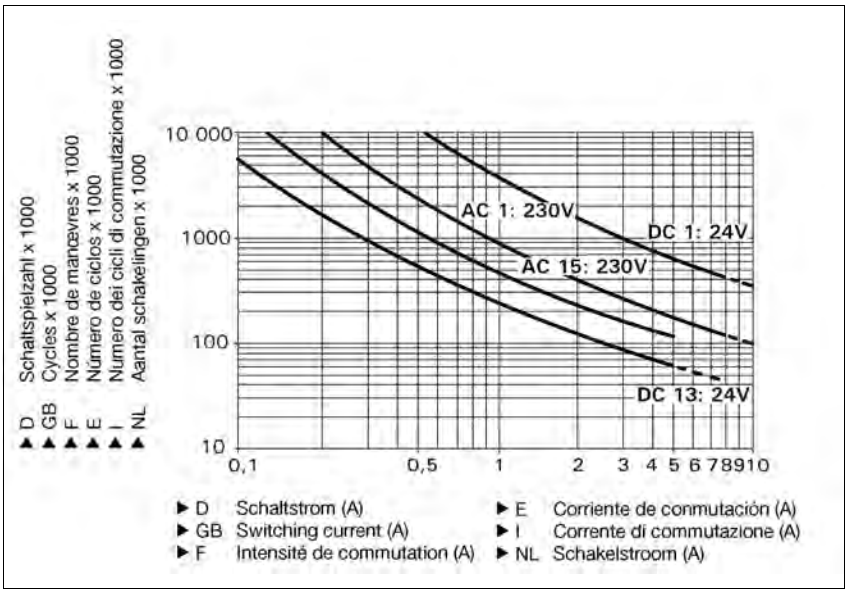

Example

- Inductive load: 0,2 A
- Utilisation category: AC15
- Contact service life: 4,000,000 cycles

Provided the application requires fewer than 4,000,000 cycles, the PFH value (see technical details) can be used in the calculation.

To increase the service life, sufficient spark suppression must be provided on all output contacts. With capacitive loads, any power surges that occur must be noted. With contactors, use freewheel diodes for spark suppression.

Technical details

Electrical data	
Supply voltage	
Supply voltage U_B AC	**24 V**, **42 V**, **48 V**, **110 V**, **115 V**, **120 V**, **230 V**, **240 V**
Supply voltage U_B DC	**24 V**
Voltage tolerance	**-15 %/+10 %**
Power consumption at U_B AC	**6.0 VA** No. 777330, 777331, 777332, 777434, 777435, 777436, 777438, 777439, 787330, 787331, 787332, 787434, 787435, 787436, 787438, 787439
Power consumption at U_B DC	**2.5 W** No. 777340, 787340
Frequency range AC	**50 - 60 Hz**
Residual ripple DC	**10 %**

Pilz GmbH & Co. KG, Felix-Wankel-Straße 2, 73760 Ostfildern, Germany
Telephone: +49 711 3409-0, Telefax: +49 711 3409-133, E-Mail: pilz.gmbh@pilz.de

Up to PL e of EN ISO 13849-1
P2HZ X1P

Electrical data	
Voltage and current at	
Input circuit DC: **24.0 V**	
N/O contact	**30 mA**
N/C contact	**20 mA**
Feedback loop DC: **24.0 V**	**45.0 mA**
Number of output contacts	
Safety contacts (S) instantaneous:	**3**
Auxiliary contacts (N/C):	**1**
Utilisation category in accordance with **EN 60947-4-1**	
Safety contacts: AC1 at **240 V**	I_{min}: **0.01 A** , I_{max}: **5.0 A** P_{max}: **1250 VA**
Safety contacts: DC1 at **24 V**	I_{min}: **0.01 A** , I_{max}: **5.0 A** P_{max}: **125 W**
Auxiliary contacts: AC1 at **240 V**	I_{min}: **0.01 A** , I_{max}: **2.0 A** P_{max}: **500 VA**
Auxiliary contacts: DC1 at **24 V**	I_{min}: **0.01 A** , I_{max}: **2.0 A** P_{max}: **50 W**
Utilisation category in accordance with **EN 60947-5-1**	
Safety contacts: AC15 at **230 V**	I_{max}: **2.5 A**
Safety contacts: DC13 at **24 V** (6 cycles/min)	I_{max}: **1.5 A**
Auxiliary contacts: AC15 at **230 V**	I_{max}: **2.0 A**
Auxiliary contacts: DC13 at **24 V** (6 cycles/min)	I_{max}: **1.5 A**
Conventional thermal current	**5.0 A**
Contact material	**AgSnO2 + 0.2 µm Au**
External contact fuse protection (I_K = 1 kA) to **EN 60947-5-1**	
Blow-out fuse, quick	
Safety contacts:	**6 A**
Auxiliary contacts:	**4 A**
Blow-out fuse, slow	
Safety contacts:	**4 A**
Auxiliary contacts:	**2 A**
Circuit breaker 24 VAC/DC, characteristic B/C	
Safety contacts:	**4 A**
Auxiliary contacts:	**2 A**
Semiconductor outputs (short circuit proof)	**24.0 V** DC, **20 mA**
External supply voltage	**24.0 V** DC
Voltage tolerance	**-15% / +10%**
Max. overall cable resistance R_{lmax} per input circuit	**14 Ohm**
Safety-related characteristic data	
PL in accordance with **EN ISO 13849-1: 2006**	**PL e** (**Cat. 4**)
Category in accordance with **EN 954-1**	**Cat. 4**
SIL CL in accordance with **EN IEC 62061**	**SIL CL 3**
PFH in accordance with **EN IEC 62061**	**3.01E-09**
SIL in accordance with **IEC 61511**	**SIL 3**
PFD in accordance with **IEC 61511**	**3.24E-06**
T_M [year] in accordance with **EN ISO 13849-1: 2006**	**20**
Times	
Delay-on de-energisation (reaction time in accordance with EN 574)	
N/O contact	**15 ms**
N/C contact	**30 ms**
Recovery time	**250 ms**
Simultaneity, channel 1 and 2	**500 ms**

Up to PL e of EN ISO 13849-1
P2HZ X1P

Environmental data	
EMC	**EN 60947-5-1**, **EN 61000-6-2**
Vibration to **EN 60068-2-6**	
Frequency	**10 - 55 Hz**
Amplitude	**0.35 mm**
Climatic suitability	**EN 60068-2-78**
Airgap creepage in accordance with **EN 60947-1**	
Pollution degree	**2**
Overvoltage category	**III**
Rated insulation voltage	**250 V**
Rated impulse withstand voltage	**4.00 kV**
Ambient temperature	**-25 - 55 °C**
Storage temperature	**-40 - 85 °C**
Protection type	
Mounting (e.g. cabinet)	**IP54**
Housing	**IP40**
Terminals	**IP20**
Mechanical data	
Housing material	
Housing	**PPO UL 94 V0**
Front	**ABS UL 94 V0**
Cross section of external conductors with screw terminals	
1 core flexible	**0.25 - 2.50 mm² , 24 - 12 AWG** No. 777330, 777331, 777332, 777340, 777434, 777435, 777436, 777438, 777439
2 core, same cross section, flexible:	
with crimp connectors, without insulating sleeve	**0.25 - 1.00 mm² , 24 - 16 AWG** No. 777330, 777331, 777332, 777340, 777434, 777435, 777436, 777438, 777439
without crimp connectors or with TWIN crimp connectors	**0.20 - 1.50 mm² , 24 - 16 AWG** No. 777330, 777331, 777332, 777340, 777434, 777435, 777436, 777438, 777439
Torque setting with screw terminals	**0.50 Nm** No. 777330, 777331, 777332, 777340, 777434, 777435, 777436, 777438, 777439
Cross section of external conductors with spring-loaded terminals: Flexible with/without crimp connectors	**0.20 - 1.50 mm² , 24 - 16 AWG** No. 787330, 787331, 787332, 787340, 787434, 787435, 787436, 787438, 787439
Spring-loaded terminals: Terminal points per connection	**2** No. 787330, 787331, 787332, 787340, 787434, 787435, 787436, 787438, 787439
Stripping length	**8 mm** No. 787330, 787331, 787332, 787340, 787434, 787435, 787436, 787438, 787439
Dimensions	
Height	**101.0 mm** No. 787330, 787331, 787332, 787340, 787434, 787435, 787436, 787438, 787439 **94.0 mm** No. 777330, 777331, 777332, 777340, 777434, 777435, 777436, 777438, 777439
Width	**45.0 mm**
Depth	**121.0 mm**
Weight	**240 g** No. 787340 **250 g** No. 777340 **350 g** No. 787330, 787331, 787332, 787434, 787435, 787436, 787438, 787439 **360 g** No. 777330, 777331, 777332, 777434, 777435, 777436, 777438, 777439

No. stands for order number.

It is essential to consider the relay's service life graphs. The relay outputs' safety-related characteristic data is only valid if the values in the service life graphs are met.

The PFH value depends on the switching frequency and the load on the relay output.
If the service life graphs are not accessible, the stated PFH value can be used irrespective of the switching frequency and the load, as the PFH value already considers the relay's B10d value as well as the failure rates of the other components.

All the units used within a safety function must be considered when calculating the safety characteristic data.

Pilz GmbH & Co. KG, Felix-Wankel-Straße 2, 73760 Ostfildern, Germany
Telephone: +49 711 3409-0, Telefax: +49 711 3409-133, E-Mail: pilz.gmbh@pilz.de

Up to PL e of EN ISO 13849-1
P2HZ X1P

INFORMATION
A safety function's SIL/PL values are **not** identical to the SIL/PL values of the units that are used and may be different. We recommend that you use the PAScal software tool to calculate the safety function's SIL/PL values.

The standards current on **2010-07** apply.

Order reference

Type	Features	Terminals	Order no.
P2HZ X1P C	24 VAC	Spring-loaded terminals	787 330
P2HZ X1P	24 VAC	Screw terminals	777 330
P2HZ X1P C	42 VAC	Spring-loaded terminals	787 331
P2HZ X1P	42 VAC	Screw terminals	777 331
P2HZ X1P C	48 VAC	Spring-loaded terminals	787 332
P2HZ X1P	48 VAC	Screw terminals	777 332
P2HZ X1P C	110 VAC	Spring-loaded terminals	787 434
P2HZ X1P	110 VAC	Screw terminals	777 434
P2HZ X1P C	115 VAC	Spring-loaded terminals	787 435
P2HZ X1P	115 VAC	Screw terminals	777 435
P2HZ X1P C	120 VAC	Spring-loaded terminals	787 436
P2HZ X1P	120 VAC	Screw terminals	777 436
P2HZ X1P C	230 VAC	Spring-loaded terminals	787 438
P2HZ X1P	230 VAC	Screw terminals	777 438
P2HZ X1P C	240 VAC	Spring-loaded terminals	787 439
P2HZ X1P	240 VAC	Screw terminals	777 439
P2HZ X1P C	24 VDC	Spring-loaded terminals	787 340
P2HZ X1P	24 VDC	Screw terminals	777 340

Up to PL e of EN ISO 13849-1
P2HZ X1.10P



Two-hand control unit for press controllers and safety circuits

Approvals

	P2HZ X1.10P
c UL us LISTED	◆
	◆
	◆

Unit features

- Positive-guided relay outputs:
  - 3 safety contacts (N/O), instantaneous
  - 1 auxiliary contact (N/C), instantaneous
- 2 semiconductor outputs
- Connection options for:
  - 2 operator elements (buttons)
- LED indicator for:
  - Switch status channel 1/2
  - Supply voltage
- Semiconductor outputs signal:
  - Switch status channel 1/2
  - Supply voltage is present
- Plug-in connection terminals (either spring-loaded terminal or screw terminal)

Unit description

The two-hand control relay meets the requirements of EN 574 Type IIIC. It forces the operator to keep his hands outside the danger zone area during the hazardous movement. The unit is suitable for use on controllers for metalworking presses as a component for simultaneous switching.
It can be used in applications with

- Mechanical presses (EN 692)
- Hydraulic presses (EN 693)
- Safety circuits in accordance with EN 60204-1

Safety features

The two-hand control relay meets the following safety requirements:

- The circuit is redundant with built-in self-monitoring
- The safety function remains effective in the case of a component failure
- The circuit prevents a further press stroke in the case of:
  - Relay failure
  - Contact welding
  - Coil defect on a relay
  - Open circuit
  - Short circuit

Block diagram

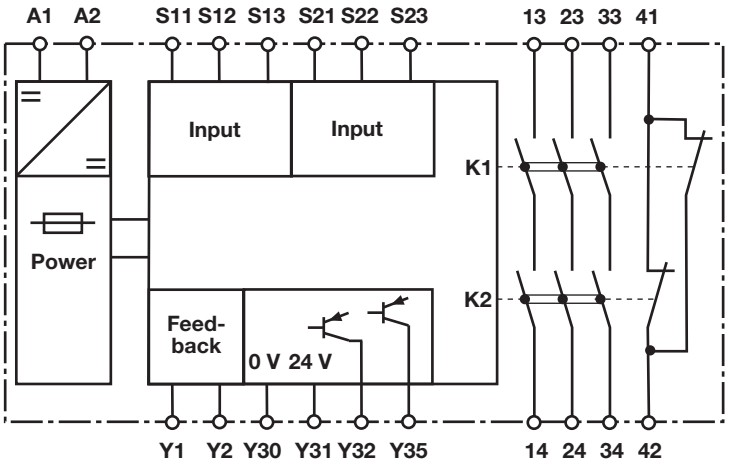

Pilz GmbH & Co. KG, Felix-Wankel-Straße 2, 73760 Ostfildern, Germany
Telephone: +49 711 3409-0, Telefax: +49 711 3409-133, E-Mail: pilz.gmbh@pilz.de

Up to PL e of EN ISO 13849-1
P2HZ X1.10P

Function description

- The two-hand control relay must be activated by simultaneously pressing two buttons within **500 ms**. If one or both of the buttons are released, the unit interrupts the control command for the hazardous movement.
- Reactivation: The output relays will not re-energise until both operator elements have been released and then re-operated simultaneously.

Timing diagram

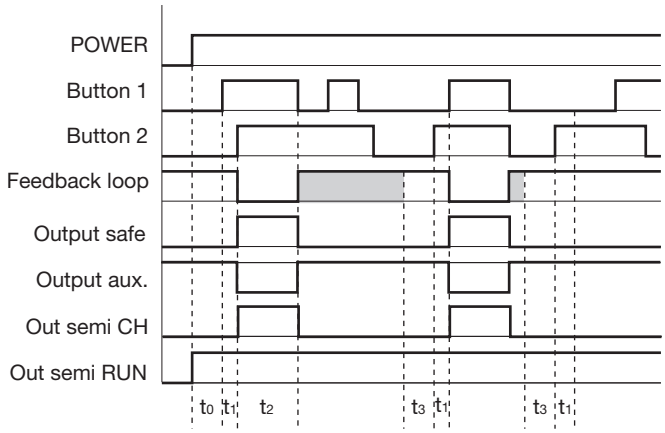

Key

- POWER: Supply voltage
- Button 1/Button 2: Input circuits S11-S12-S13, S21-S22-S23
- Feedback loop: Feedback loop Y1-Y2
- Output safe: Safety outputs 13-14, 23-24, 33-34
- Output aux: Auxiliary contacts 41-42
- Out semi RUN: Semiconductor output for operational readiness Y35
- Out semi CH: Semiconductor output switch status Y32
- t_0: Recovery time after power on
- t_1: Simultaneity, channel 1 and 2
- t_2: Operating cycle ended through button 1 or 2
- t_3: Y1-Y2 must be closed before before the button is operated (recovery time)

Shaded area: Status irrelevant

Wiring

Please note:

- Information given in the “Technical details” must be followed.
- Outputs 13-14, 23-24, 33-34 are safety contacts, output 41-42 is an auxiliary contact (e.g. for display).
- To prevent contact welding, a fuse should be connected before the output contacts (see technical details).
- Calculation of the max. cable runs l_{max} in the input circuit:

$$l_{max} = \frac{R_{lmax}}{R_l / km}$$

R_{lmax} = max. overall cable resistance (see technical details)
R_l /km = cable resistance/km

- Use copper wire that can withstand 60/75 °C.
- Sufficient fuse protection must be provided on all output contacts with capacitive and inductive loads.

Pilz GmbH & Co. KG, Felix-Wankel-Straße 2, 73760 Ostfildern, Germany
Telephone: +49 711 3409-0, Telefax: +49 711 3409-133, E-Mail: pilz.gmbh@pilz.de

Up to PL e of EN ISO 13849-1
P2HZ X1.10P

Preparing for operation

- Supply voltage

Supply voltage	AC	DC
	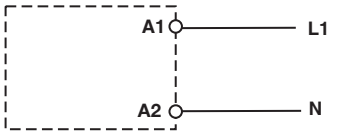	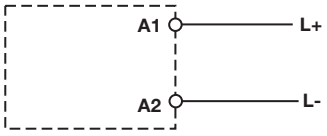

- Input circuit

Input circuit	Single-channel	Dual-channel
Two-hand button **with** detection of shorts across contacts	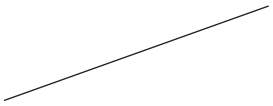	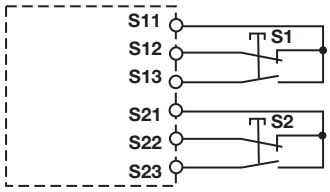

- Feedback loop

Feedback loop	
Contacts from external contactors	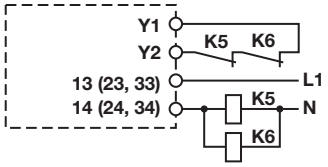

- Semiconductor output

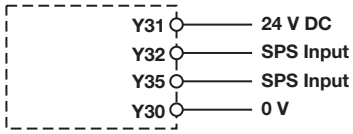

- Key

S1/S2	Two-hand button

Pilz GmbH & Co. KG, Felix-Wankel-Straße 2, 73760 Ostfildern, Germany
Telephone: +49 711 3409-0, Telefax: +49 711 3409-133, E-Mail: pilz.gmbh@pilz.de

Up to PL e of EN ISO 13849-1
P2HZ X1.10P

Terminal configuration

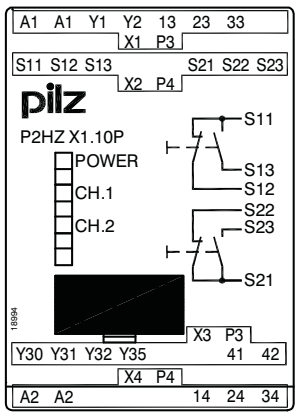

Installation

- The safety relay should be installed in a control cabinet with a protection type of at least IP54.
- Use the notch on the rear of the unit to attach it to a DIN rail.
- Ensure the unit is mounted securely on a vertical DIN rail (35 mm) by using a fixing element (e.g. retaining bracket or an end angle).

Notice
The distance of the button connected to the two-hand relay from the nearest danger zone must be large enough that if one of the buttons is released, the dangerous moment is interrupted before the operator can reach into the danger zone (see EN 999 “The positioning of protective equipment in respect of approach speeds of parts of the human body”).

Dimensions

* with spring-loaded terminals

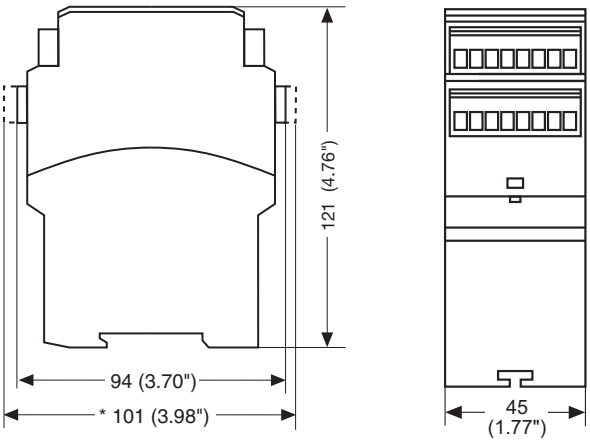

Up to PL e of EN ISO 13849-1
P2HZ X1.10P

Notice

This data sheet is only intended for use during configuration. Please refer to the operating manual for installation and operation.

Service life graph

The service life graphs indicate the number of cycles from which failures due to wear must be expected. The wear is mainly caused by the electrical load; the mechanical load is negligible.

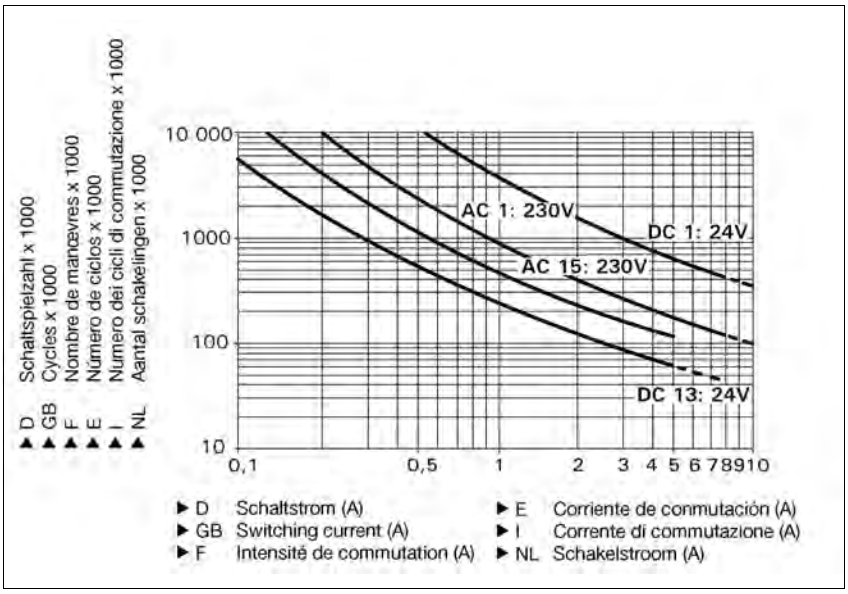

Example
- Inductive load: 0,2 A
- Utilisation category: AC15
- Contact service life: 4,000,000 cycles

Provided the application requires fewer than 4,000,000 cycles, the PFH value (see technical details) can be used in the calculation.

To increase the service life, sufficient spark suppression must be provided on all output contacts. With capacitive loads, any power surges that occur must be noted. With contactors, use freewheel diodes for spark suppression.

Technical details

Electrical data	
Supply voltage	
Supply voltage U_B DC	**24 V**
Voltage tolerance	**-15 %/+10 %**
Power consumption at U_B DC	**2.5 W**
Residual ripple DC	**10 %**
Voltage and current at	
Input circuit DC: **24.0 V**	
N/O contact	**30 mA**
N/C contact	**20 mA**
Feedback loop DC: **24.0 V**	**45.0 mA**
Number of output contacts	
Safety contacts (S) instantaneous:	**3**
Auxiliary contacts (N/C):	**1**

Pilz GmbH & Co. KG, Felix-Wankel-Straße 2, 73760 Ostfildern, Germany
Telephone: +49 711 3409-0, Telefax: +49 711 3409-133, E-Mail: pilz.gmbh@pilz.de

Up to PL e of EN ISO 13849-1
P2HZ X1.10P

Electrical data	
Utilisation category in accordance with **EN 60947-4-1**	
Safety contacts: AC1 at **240 V**	I_{min}: **0.01 A** , I_{max}: **5.0 A** P_{max}: **1250 VA**
Safety contacts: DC1 at **24 V**	I_{min}: **0.01 A** , I_{max}: **5.0 A** P_{max}: **125 W**
Auxiliary contacts: AC1 at **240 V**	I_{min}: **0.01 A** , I_{max}: **2.0 A** P_{max}: **500 VA**
Auxiliary contacts: DC1 at **24 V**	I_{min}: **0.01 A** , I_{max}: **2.0 A** P_{max}: **50 W**
Utilisation category in accordance with **EN 60947-5-1**	
Safety contacts: AC15 at **230 V**	I_{max}: **2.5 A**
Safety contacts: DC13 at **24 V** (6 cycles/min)	I_{max}: **1.5 A**
Auxiliary contacts: AC15 at **230 V**	I_{max}: **2.0 A**
Auxiliary contacts: DC13 at **24 V** (6 cycles/min)	I_{max}: **1.5 A**
Conventional thermal current	**5.0 A**
Contact material	**AgSnO2 + 0.2 µm Au**
External contact fuse protection (I_K = 1 kA) to **EN 60947-5-1**	
Blow-out fuse, quick	
Safety contacts:	**6 A**
Auxiliary contacts:	**4 A**
Blow-out fuse, slow	
Safety contacts:	**4 A**
Auxiliary contacts:	**2 A**
Circuit breaker 24 VAC/DC, characteristic B/C	
Safety contacts:	**4 A**
Auxiliary contacts:	**2 A**
Semiconductor outputs (short circuit proof)	**24.0 V** DC, **20 mA**
External supply voltage	**24.0 V** DC
Voltage tolerance	**-15% / +10%**
Max. overall cable resistance R_{lmax} per input circuit	**14 Ohm**
Safety-related characteristic data	
PL in accordance with **EN ISO 13849-1: 2006**	**PL e** (**Cat. 4**)
Category in accordance with **EN 954-1**	**Cat. 4**
SIL CL in accordance with **EN IEC 62061**	**SIL CL 3**
PFH in accordance with **EN IEC 62061**	**3.01E-09**
SIL in accordance with **IEC 61511**	**SIL 3**
PFD in accordance with **IEC 61511**	**3.24E-06**
T_M [year] in accordance with **EN ISO 13849-1: 2006**	**20**
Times	
Delay-on de-energisation (reaction time in accordance with EN 574)	
N/O contact	**15 ms**
N/C contact	**30 ms**
Recovery time	**250 ms**
Simultaneity, channel 1 and 2	**500 ms**
Supply interruption before de-energisation	**150 ms**
Environmental data	
EMC	**EN 60947-5-1**, **EN 61000-6-2**
Vibration to **EN 60068-2-6**	
Frequency	**10 - 55 Hz**
Amplitude	**0.35 mm**
Climatic suitability	**EN 60068-2-78**
Airgap creepage in accordance with **EN 60947-1**	
Pollution degree	**2**
Overvoltage category	**III**
Rated insulation voltage	**250 V**
Rated impulse withstand voltage	**4.00 kV**

Up to PL e of EN ISO 13849-1
P2HZ X1.10P

Environmental data	
Ambient temperature	**-25 - 55 °C**
Storage temperature	**-40 - 85 °C**
Protection type	
Mounting (e.g. cabinet)	**IP54**
Housing	**IP40**
Terminals	**IP20**
Mechanical data	
Housing material	
Housing	**PPO UL 94 V0**
Front	**ABS UL 94 V0**
Cross section of external conductors with screw terminals	
1 core flexible	**0.25 - 2.50 mm² , 24 - 12 AWG** No. 777341
2 core, same cross section, flexible:	
with crimp connectors, without insulating sleeve	**0.25 - 1.00 mm² , 24 - 16 AWG** No. 777341
without crimp connectors or with TWIN crimp connectors	**0.20 - 1.50 mm² , 24 - 16 AWG** No. 777341
Torque setting with screw terminals	**0.50 Nm** No. 777341
Cross section of external conductors with spring-loaded terminals: Flexible with/without crimp connectors	**0.20 - 1.50 mm² , 24 - 16 AWG** No. 787341
Spring-loaded terminals: Terminal points per connection	**2** No. 787341
Stripping length	**8 mm** No. 787341
Dimensions	
Height	**101.0 mm** No. 787341 **94.0 mm** No. 777341
Width	**45.0 mm**
Depth	**121.0 mm**
Weight	**280 g** No. 787341 **290 g** No. 777341

No. stands for order number.

It is essential to consider the relay's service life graphs. The relay outputs' safety-related characteristic data is only valid if the values in the service life graphs are met.

The PFH value depends on the switching frequency and the load on the relay output.
If the service life graphs are not accessible, the stated PFH value can be used irrespective of the switching frequency and the load, as the PFH value already considers the relay's B10d value as well as the failure rates of the other components.

All the units used within a safety function must be considered when calculating the safety characteristic data.

INFORMATION
A safety function's SIL/PL values are **not** identical to the SIL/PL values of the units that are used and may be different. We recommend that you use the PAScal software tool to calculate the safety function's SIL/PL values.

The standards current on **2010-07** apply.

Order reference

Type	Features		Terminals	Order no.
P2HZ X1.10P C		24 VDC	Spring-loaded terminals	787 341
P2HZ X1.10P		24 VDC	Screw terminals	777 341

Pilz GmbH & Co. KG, Felix-Wankel-Straße 2, 73760 Ostfildern, Germany
Telephone: +49 711 3409-0, Telefax: +49 711 3409-133, E-Mail: pilz.gmbh@pilz.de

Up to PL e of EN ISO 13849-1
P2HZ X4P



Two-hand control unit for press controllers and safety circuits

Approvals

	P2HZ X4P
c UL us LISTED	◆
	◆
	◆

Unit features

- Positive-guided relay outputs:
  - 3 safety contacts (N/O), instantaneous
  - 1 auxiliary contact (N/C), instantaneous
- Connection options for:
  - 2 operator elements (buttons)
- LED indicator for:
  - Switch status channel 1/2
  - Supply voltage
- Plug-in connection terminals (either spring-loaded terminal or screw terminal)
- See order reference for unit types

Unit description

The two-hand control relay meets the requirements of EN 574 Type IIIC. It forces the operator to keep his hands outside the danger zone area during the hazardous movement. The unit is suitable for use on controllers for metalworking presses as a component for simultaneous switching.
It can be used in applications with

- Mechanical presses (EN 692)
- Hydraulic presses (EN 693)
- Safety circuits in accordance with EN 60204-1

Safety features

The two-hand control relay meets the following safety requirements:

- The circuit is redundant with built-in self-monitoring
- The safety function remains effective in the case of a component failure
- The circuit prevents a further press stroke in the case of:
  - Relay failure
  - Contact welding
  - Coil defect on a relay
  - Open circuit
  - Short circuit

Block diagram

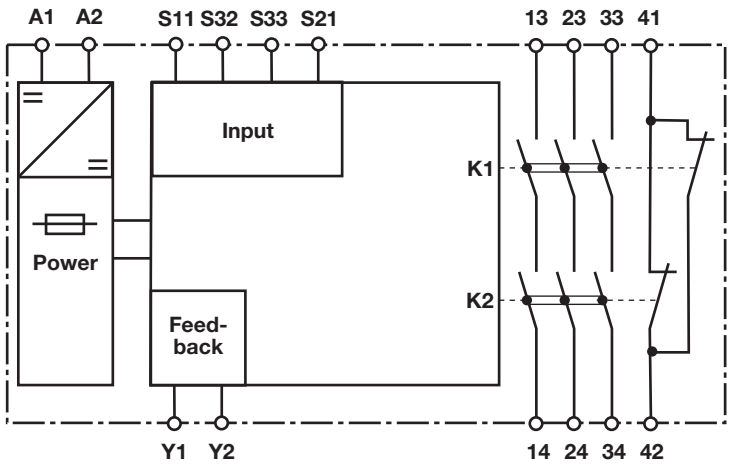

Up to PL e of EN ISO 13849-1
P2HZ X4P

Function description

- The two-hand control relay must be activated by simultaneously pressing two buttons within **500 ms**. If one or both of the buttons are released, the unit interrupts the control command for the hazardous movement.
- Reactivation: The output relays will not re-energise until both operator elements have been released and then re-operated simultaneously.

Timing diagram

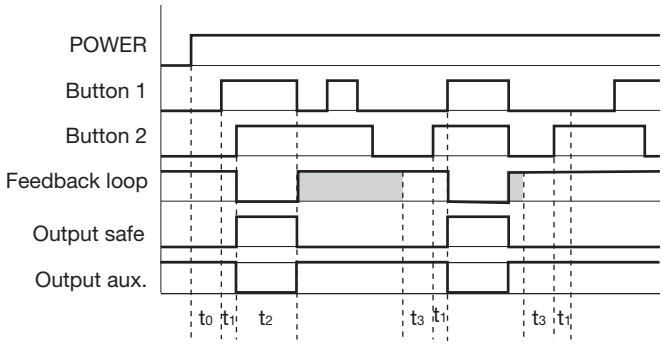

Key

- POWER: Supply voltage
- Button 1/Button 2: Input circuits S11, S21, S32, S33
- Feedback loop: Feedback loop Y1-Y2
- Output safe: Safety outputs 13-14, 23-24, 33-34
- Output aux: Auxiliary contacts 41-42
- t_0: Recovery time after power on
- t_1: Simultaneity, channel 1 and 2
- t_2: Operating cycle ended through button 1 or 2
- t_3: Y1-Y2 must be closed before before the button is operated (recovery time)

Shaded area: Status irrelevant

Wiring

Please note:

- Information given in the “Technical details” must be followed.
- Outputs 13-14, 23-24, 33-34 are safety contacts, output 41-42 is an auxiliary contact (e.g. for display).
- To prevent contact welding, a fuse should be connected before the output contacts (see technical details).
- Calculation of the max. cable runs I_{max} in the input circuit:

$$I_{max} = \frac{R_{lmax}}{R_l / km}$$

R_{lmax} = max. overall cable resistance (see technical details)
R_l /km = cable resistance/km

- Use copper wire that can withstand 60/75 °C.
- Sufficient fuse protection must be provided on all output contacts with capacitive and inductive loads.

Pilz GmbH & Co. KG, Felix-Wankel-Straße 2, 73760 Ostfildern, Germany
Telephone: +49 711 3409-0, Telefax: +49 711 3409-133, E-Mail: pilz.gmbh@pilz.de

Up to PL e of EN ISO 13849-1
P2HZ X4P

Preparing for operation

- Supply voltage

Supply voltage	AC	DC
	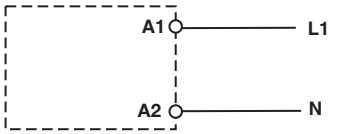	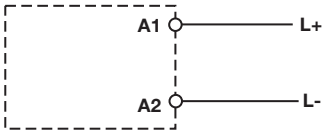

- Input circuit

Input circuit	Single-channel	Dual-channel
Two-hand button **with** detection of shorts across contacts	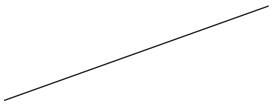	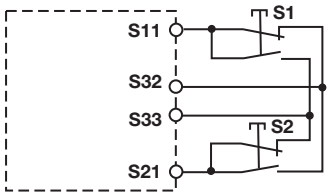

- Feedback loop

Feedback loop	
Contacts from external contactors	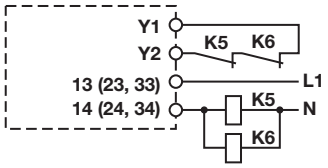

- Key

S1/S2	Two-hand button

Up to PL e of EN ISO 13849-1
P2HZ X4P

Terminal configuration

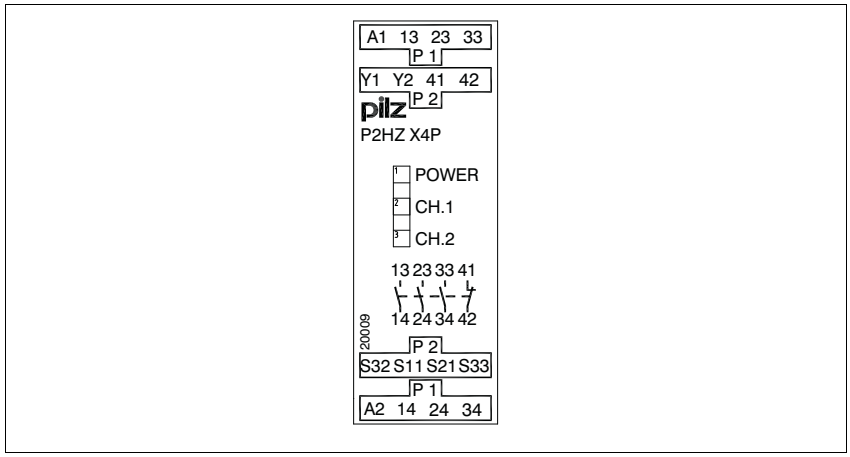

Installation

- The safety relay should be installed in a control cabinet with a protection type of at least IP54.
- Use the notch on the rear of the unit to attach it to a DIN rail.
- Ensure the unit is mounted securely on a vertical DIN rail (35 mm) by using a fixing element (e.g. retaining bracket or an end angle).

Notice
The distance of the button connected to the two-hand relay from the nearest danger zone must be large enough that if one of the buttons is released, the dangerous moment is interrupted before the operator can reach into the danger zone (see EN 999 “The positioning of protective equipment in respect of approach speeds of parts of the human body”).

Dimensions

* with spring-loaded terminals

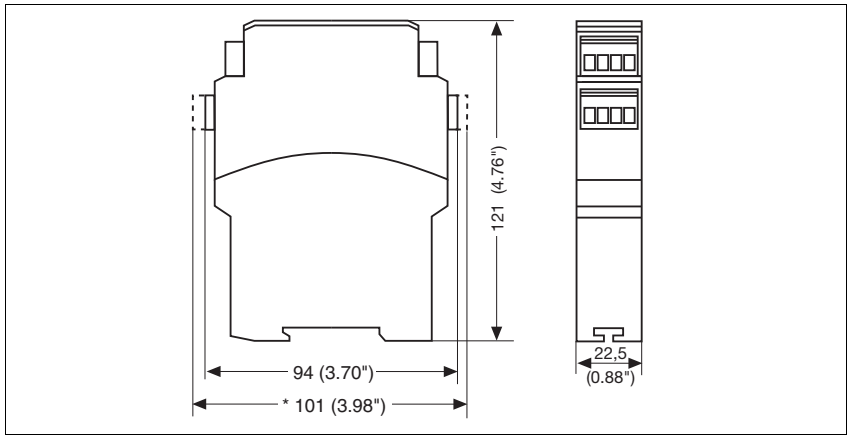

Pilz GmbH & Co. KG, Felix-Wankel-Straße 2, 73760 Ostfildern, Germany
Telephone: +49 711 3409-0, Telefax: +49 711 3409-133, E-Mail: pilz.gmbh@pilz.de

Up to PL e of EN ISO 13849-1
P2HZ X4P

Notice

This data sheet is only intended for use during configuration. Please refer to the operating manual for installation and operation.

Service life graph

The service life graphs indicate the number of cycles from which failures due to wear must be expected. The wear is mainly caused by the electrical load; the mechanical load is negligible.

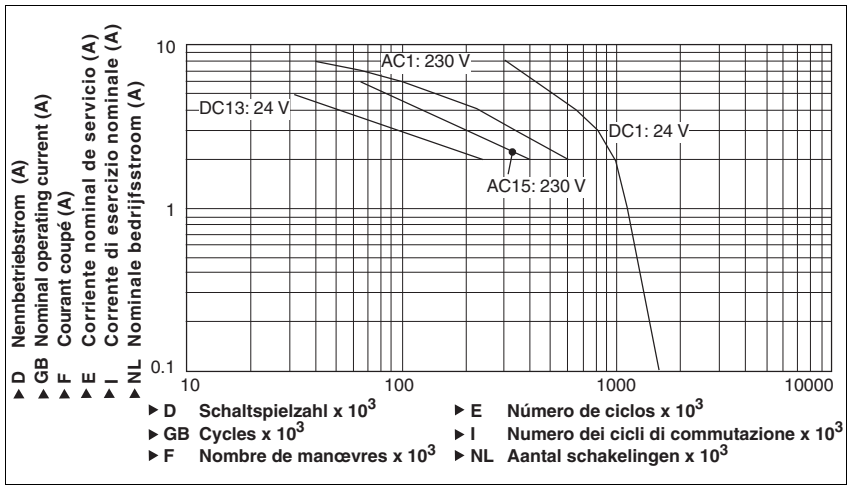

Example
- Inductive load: 2 A
- Utilisation category: AC15
- Contact service life: 400 000 cycles

Provided the application requires fewer than 400 000 cycles, the PFH value (see technical details) can be used in the calculation.

To increase the service life, sufficient spark suppression must be provided on all output contacts. With capacitive loads, any power surges that occur must be noted. With contactors, use freewheel diodes for spark suppression.

Technical details

Electrical data	
Supply voltage	
Supply voltage U_B AC	**24 V**
Supply voltage U_B DC	**24 V**
Voltage tolerance	**-15 %/+10 %**
Power consumption at U_B AC	**4.0 VA** No. 777354, 787354
Power consumption at U_B DC	**2.5 W** No. 777355, 787355
Frequency range AC	**50 - 60 Hz**
Residual ripple DC	**10 %**
Voltage and current at	
Input circuit DC: **24.0 V**	
N/O contact	**15 mA**
N/C contact	**20 mA** No. 777355, 787355
	25 mA No. 777354, 787354
Feedback loop DC: **24.0 V**	**25.0 mA** No. 777354, 787354
	30.0 mA No. 777355, 787355
Number of output contacts	
Safety contacts (S) instantaneous:	**3**
Auxiliary contacts (N/C):	**1**

Pilz GmbH & Co. KG, Felix-Wankel-Straße 2, 73760 Ostfildern, Germany
Telephone: +49 711 3409-0, Telefax: +49 711 3409-133, E-Mail: pilz.gmbh@pilz.de

Up to PL e of EN ISO 13849-1
P2HZ X4P

Electrical data	
Utilisation category in accordance with **EN 60947-4-1**	
Safety contacts: AC1 at **240 V**	I_{min}: **0.01 A** , I_{max}: **5.0 A** P_{max}: **1250 VA**
Safety contacts: DC1 at **24 V**	I_{min}: **0.01 A** , I_{max}: **5.0 A** P_{max}: **125 W**
Auxiliary contacts: AC1 at **240 V**	I_{min}: **0.01 A** , I_{max}: **2.5 A** P_{max}: **600 VA**
Auxiliary contacts: DC1 at **24 V**	I_{min}: **0.01 A** , I_{max}: **2.5 A** P_{max}: **60 W**
Utilisation category in accordance with **EN 60947-5-1**	
Safety contacts: AC15 at **230 V**	I_{max}: **2.5 A**
Safety contacts: DC13 at **24 V** (6 cycles/min)	I_{max}: **1.5 A**
Auxiliary contacts: AC15 at **230 V**	I_{max}: **2.5 A**
Auxiliary contacts: DC13 at **24 V** (6 cycles/min)	I_{max}: **1.5 A**
Conventional thermal current	**5.0 A**
Contact material	**AgSnO2 + 0.2 µm Au**
External contact fuse protection (I_K = 1 kA) to **EN 60947-5-1**	
Blow-out fuse, quick	
Safety contacts:	**6 A**
Auxiliary contacts:	**4 A**
Blow-out fuse, slow	
Safety contacts:	**4 A**
Auxiliary contacts:	**2 A**
Circuit breaker 24 VAC/DC, characteristic B/C	
Safety contacts:	**4 A**
Auxiliary contacts:	**2 A**
Max. overall cable resistance R_{lmax} per input circuit	**14 Ohm**
Safety-related characteristic data	
PL in accordance with **EN ISO 13849-1: 2006**	**PL e** (**Cat. 4**)
Category in accordance with **EN 954-1**	**Cat. 4**
SIL CL in accordance with **EN IEC 62061**	**SIL CL 3**
PFH in accordance with **EN IEC 62061**	**3.01E-09**
SIL in accordance with **IEC 61511**	**SIL 3**
PFD in accordance with **IEC 61511**	**3.24E-06**
T_M [year] in accordance with **EN ISO 13849-1: 2006**	**20**
Times	
Delay-on de-energisation (reaction time in accordance with EN 574)	
N/O contact	**15 ms**
N/C contact	**30 ms**
Recovery time	**250 ms**
Simultaneity, channel 1 and 2	**500 ms**
Environmental data	
EMC	**EN 60947-5-1**, **EN 61000-6-2**
Vibration to **EN 60068-2-6**	
Frequency	**10 - 55 Hz**
Amplitude	**0.35 mm**
Climatic suitability	**EN 60068-2-78**
Airgap creepage in accordance with **EN 60947-1**	
Pollution degree	**2**
Overvoltage category	**III**
Rated insulation voltage	**250 V**
Rated impulse withstand voltage	**4.00 kV**
Ambient temperature	**-25 - 55 °C**
Storage temperature	**-40 - 85 °C**

Pilz GmbH & Co. KG, Felix-Wankel-Straße 2, 73760 Ostfildern, Germany
Telephone: +49 711 3409-0, Telefax: +49 711 3409-133, E-Mail: pilz.gmbh@pilz.de

Up to PL e of EN ISO 13849-1
P2HZ X4P

Environmental data	
Protection type	
Mounting (e.g. cabinet)	**IP54**
Housing	**IP40**
Terminals	**IP20**
Mechanical data	
Housing material	
Housing	**PPO UL 94 V0**
Front	**ABS UL 94 V0**
Cross section of external conductors with screw terminals	
1 core flexible	**0.25 - 2.50 mm² , 24 - 12 AWG** No. 777354, 777355
2 core, same cross section, flexible:	
with crimp connectors, without insulating sleeve	**0.25 - 1.00 mm² , 24 - 16 AWG** No. 777354, 777355
without crimp connectors or with TWIN crimp connectors	**0.20 - 1.50 mm² , 24 - 16 AWG** No. 777354, 777355
Torque setting with screw terminals	**0.50 Nm** No. 777354, 777355
Cross section of external conductors with spring-loaded terminals: Flexible with/without crimp connectors	**0.20 - 1.50 mm² , 24 - 16 AWG** No. 787354, 787355
Spring-loaded terminals: Terminal points per connection	**2** No. 787354, 787355
Stripping length	**8 mm** No. 787354, 787355
Dimensions	
Height	**101.0 mm** No. 787354, 787355 **94.0 mm** No. 777354, 777355
Width	**22.5 mm**
Depth	**121.0 mm**
Weight	**215 g** No. 787354, 787355 **220 g** No. 777354, 777355

No. stands for order number.

It is essential to consider the relay's service life graphs. The relay outputs' safety-related characteristic data is only valid if the values in the service life graphs are met.

The PFH value depends on the switching frequency and the load on the relay output.
If the service life graphs are not accessible, the stated PFH value can be used irrespective of the switching frequency and the load, as the PFH value already considers the relay's B10d value as well as the failure rates of the other components.

All the units used within a safety function must be considered when calculating the safety characteristic data.

INFORMATION
A safety function's SIL/PL values are **not** identical to the SIL/PL values of the units that are used and may be different. We recommend that you use the PAScal software tool to calculate the safety function's SIL/PL values.

The standards current on **2010-07** apply.

Order reference

Type	Features		Terminals	Order no.
P2HZ X4P C	24 VAC		Spring-loaded terminals	787 354
P2HZ X4P	24 VAC		Screw terminals	777 354
P2HZ X4P C		24 VDC	Spring-loaded terminals	787 355
P2HZ X4P		24 VDC	Screw terminals	777 355

Up to PL e of EN ISO 13849-1
PSWZ X1P



Standstill monitor for safe standstill monitoring

Approvals

	PSWZ X1P
c UL us LISTED	◆
TÜV	◆
CCC	◆

Unit features

- Positive-guided relay outputs:
  - 2 safety contacts (N/O), instantaneous
  - 1 auxiliary contact (N/C), instantaneous
- LED indicator for:
  - Supply voltage
  - Standstill on channel 1/2
  - Switch status
  - Fault signal if simultaneity time is exceeded
- Semiconductor outputs signal:
  - Error
  - Switch status
- Semiconductor input for reset function
- Measuring inputs for single or three-phase motors
- Measuring voltage selectable
- Feedback loop
- Plug-in connection terminals (either spring-loaded terminal or screw terminal)
- See order reference for unit types

Unit description

The unit is used for safe standstill monitoring. It is designed for use on

- Standstill monitoring functions on plants with dangerous machine parts or tools (EN 1088 clause 7.4),
- Safety circuits in accordance with EN 60204-1 and IEC 60204-1.

Standstill is only detected on power-free measuring circuits. Residual voltages, induced voltages or drives within the position control will prevent safe standstill detection!

Safety features

- Relays K1 and K2 are interlocked in such a way that the unit cannot be switched back on in the case of contact welding or an open circuit.
- The unit monitors the measuring circuits for open circuit. If an open circuit occurs between the unit and the motor or on the motor itself, the unit immediately switches off.
- The standstill monitor prevents the plant from being enabled in the following cases
  - Power supply failure
  - Component failure
  - Measuring circuits are open circuit
  - Coil defect/open circuit

Block diagram

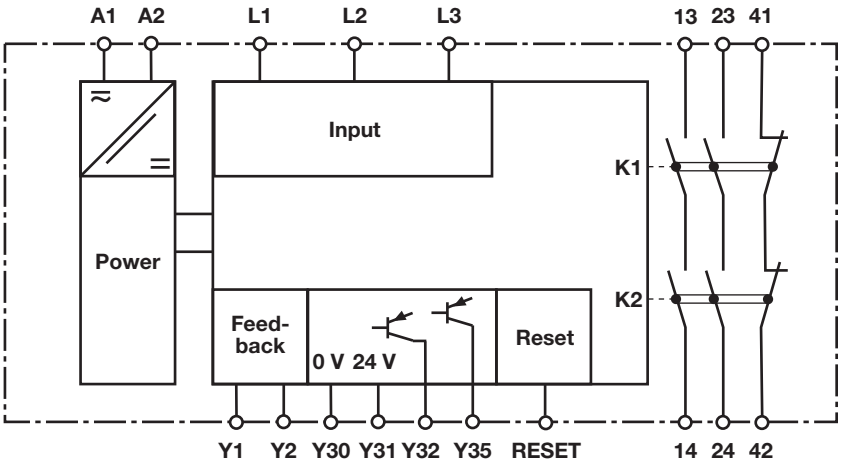

Pilz GmbH & Co. KG, Felix-Wankel-Straße 2, 73760 Ostfildern, Germany
Telephone: +49 711 3409-0, Telefax: +49 711 3409-133, E-Mail: pilz.gmbh@pilz.de

1002014-EN-02-2011-02

Up to PL e of EN ISO 13849-1
PSWZ X1P

Function description

The device uses two separate measuring channels to measure the regenerated voltage, induced from the motor during the rundown period or during start-up. If the voltage falls below the set response value (standstill threshold), the standstill monitor enables the monitored plant. If the voltage exceeds the set release value, the standstill monitor disables the monitored plant.
To reactivate, the voltage at both channels must fall below the response value U_{on} within the time t_g (simultaneity monitoring). To do this the feedback loop Y1-Y2 must be closed. If the simultaneity requirement is exceeded, the standstill monitor does not enable the monitored plant. The unit can be reactivated by switching 24 VDC on and off at the RESET input.
The response value U_{on} can be set jointly for both channels in order to suit the motor that is to be monitored. The release value U_{off} (hysteresis) corresponds to twice the response value.
When used with frequency converters, the PSWZ X1P cannot detect standstill until the controller inhibit has been switched off.
After the supply voltage is switched on, the unit performs a self test. The unit simulates a situation in which the release value is exceeded and the measuring circuit has an open circuit. The correct function of the output relay and feedback loop is also tested. The test takes ca. 1.5 s.
Operating modes:
- Single-phase operation:
  - One measuring circuit (calculated at two different measuring points) affects both channels
- Three-phase operation:
  - Two redundant (identical) measuring circuits affect channel 1 and 2
  - Voltages in the measuring circuit are monitored (failsafe in the event of a short circuit)

2.2

Timing diagram

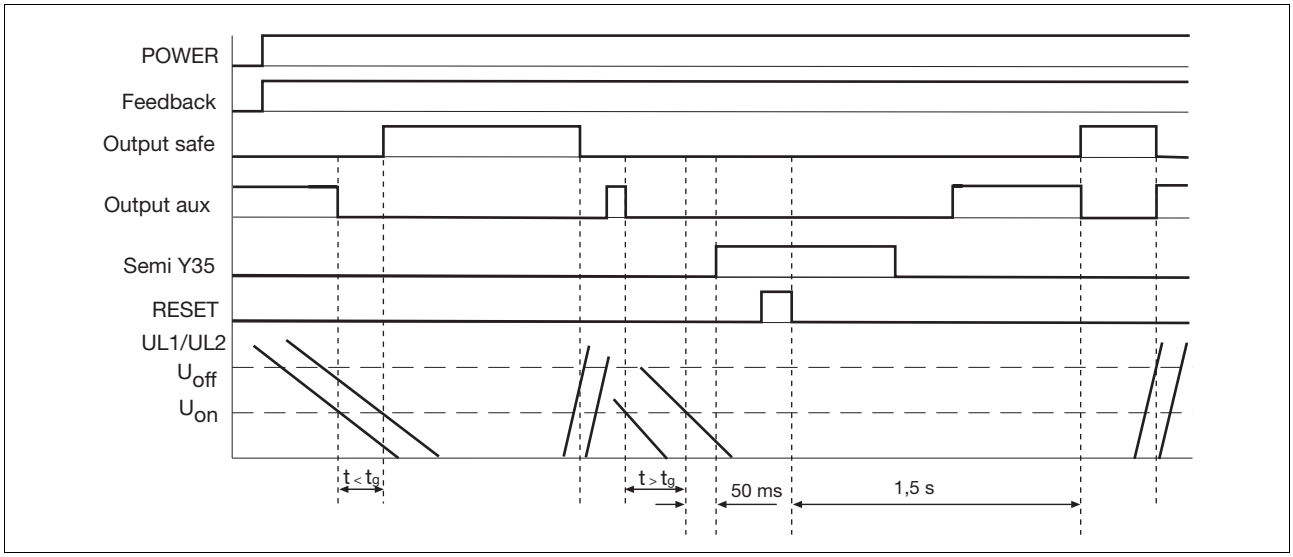

Key
- POWER: Supply voltage
- UL1/UL2: Input circuitL1, L2, L3
- Feedback: Feedback loop Y1-Y2
- Output safe: Safety contacts 13-14, 23-24
- Output aux: Auxiliary contact 41-42
- Semi Y35: Semiconductor output for fault signal
- RESET: Reset input RESET
- U_{on}: Response value
- U_{off}: Release value
- t_g: Simultaneity

Wiring

Please note:
- Information given in the “Technical details” must be followed.
- Outputs 13-14, 23-24 are safety contacts, output 41-42 is an auxiliary contact (e.g. for display).
- To prevent contact welding, a fuse should be connected before the output contacts (see technical details).
- Use copper wire that can withstand 60/75 °C.
- When used with converters: Use screened cable for the wiring between the standstill monitor and the motor. Connect the cable screening on the motor.

Up to PL e of EN ISO 13849-1
PSWZ X1P

Preparing for operation

- Supply voltage

Supply voltage	AC	DC
	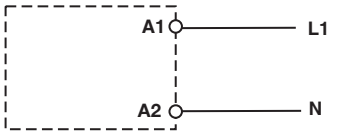	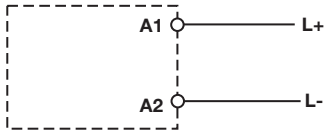

- Input circuit

Input circuit	Single-phase motor	Three-phase motor
	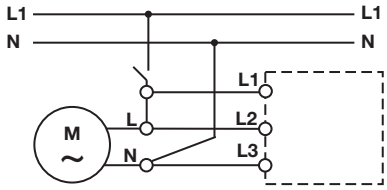	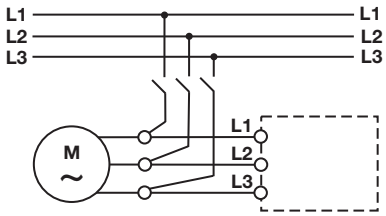

- Feedback loop

Contacts from external contactors or link		
	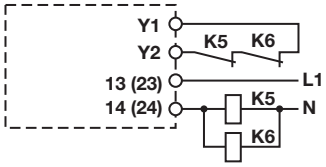	

- Semiconductor output

Y32: Semiconductor output for switch status Y35: Semiconductor output for fault signal	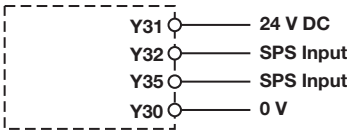

- Semiconductor input

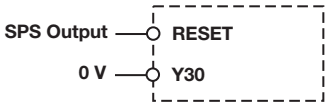

Pilz GmbH & Co. KG, Felix-Wankel-Straße 2, 73760 Ostfildern, Germany
Telephone: +49 711 3409-0, Telefax: +49 711 3409-133, E-Mail: pilz.gmbh@pilz.de

Up to PL e of EN ISO 13849-1
PSWZ X1P

Terminal configuration

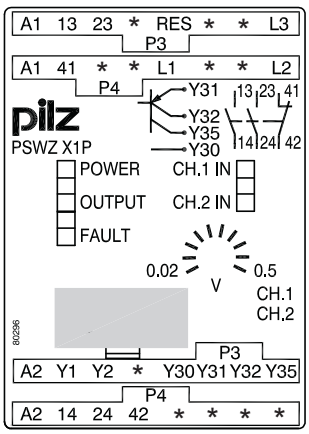

Installation

- The safety relay should be installed in a control cabinet with a protection type of at least IP54.
- Use the notch on the rear of the unit to attach it to a DIN rail.
- Ensure the unit is mounted securely on a vertical DIN rail (35 mm) by using a fixing element (e.g. retaining bracket or an end angle).

Dimensions

* with spring-loaded terminals

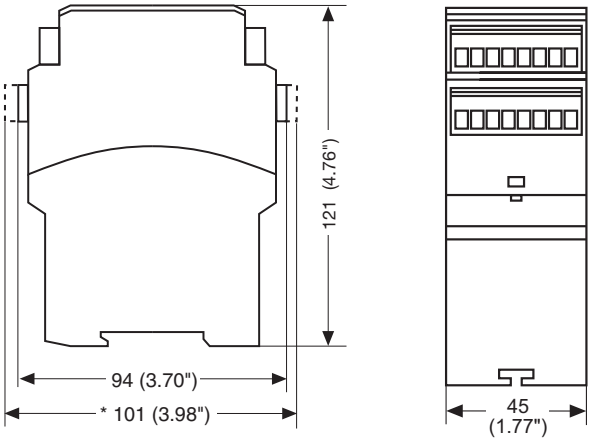

Up to PL e of EN ISO 13849-1
PSWZ X1P

Notice

This data sheet is only intended for use during configuration. Please refer to the operating manual for installation and operation.

Service life graph

The service life graphs indicate the number of cycles from which failures due to wear must be expected. The wear is mainly caused by the electrical load; the mechanical load is negligible.

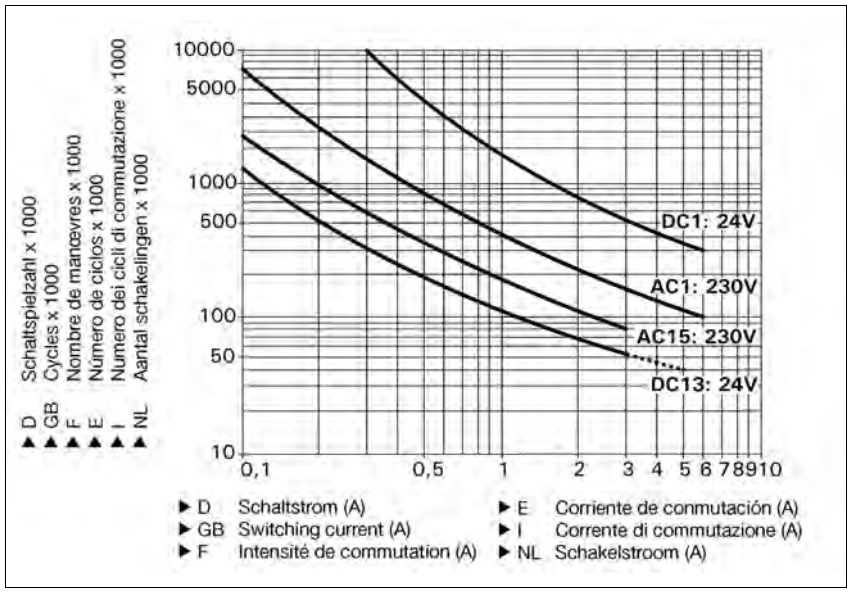

Example
- Inductive load: 0,2 A
- Utilisation category: AC15
- Contact service life: 1,000,000 cycles

Provided the application requires fewer than 1,000,000 cycles, the PFH value (see technical details) can be used in the calculation.

To increase the service life, sufficient spark suppression must be provided on all output contacts. With capacitive loads, any power surges that occur must be noted. With contactors, use freewheel diodes for spark suppression.

Technical details

Electrical data	
Supply voltage	
Supply voltage U_B AC/DC	**24 - 240 V**
Voltage tolerance	**-15 %/+10 %**
Power consumption at U_B AC	**5.0 VA**
Power consumption at U_B DC	**3.0 W**
Frequency range AC	**50 - 60 Hz**
Residual ripple DC	**160 %**
Voltage and current at	
Feedback loop DC: **24.0 V**	**35.0 mA**
Number of output contacts	
Safety contacts (S) instantaneous:	**2**
Auxiliary contacts (N/C):	**1**

Pilz GmbH & Co. KG, Felix-Wankel-Straße 2, 73760 Ostfildern, Germany
Telephone: +49 711 3409-0, Telefax: +49 711 3409-133, E-Mail: pilz.gmbh@pilz.de

Up to PL e of EN ISO 13849-1
PSWZ X1P

Electrical data	
Utilisation category in accordance with **EN 60947-4-1**	
Safety contacts: AC1 at **240 V**	I_{min}: **0.01 A** , I_{max}: **6.0 A** P_{max}: **1500 VA**
Safety contacts: DC1 at **24 V**	I_{min}: **0.01 A** , I_{max}: **6.0 A** P_{max}: **150 W**
Auxiliary contacts: AC1 at **240 V**	I_{min}: **0.01 A** , I_{max}: **6.0 A** P_{max}: **1500 VA**
Auxiliary contacts: DC1 at **24 V**	I_{min}: **0.01 A** , I_{max}: **6.0 A** P_{max}: **150 W**
Utilisation category in accordance with **EN 60947-5-1**	
Safety contacts: AC15 at **230 V**	I_{max}: **3.0 A**
Safety contacts: DC13 at **24 V** (6 cycles/min)	I_{max}: **4.0 A**
Auxiliary contacts: AC15 at **230 V**	I_{max}: **3.0 A**
Auxiliary contacts: DC13 at **24 V** (6 cycles/min)	I_{max}: **4.0 A**
Contact material	**AgCuNi + 0.2 µm Au**
External contact fuse protection (I_K = 1 kA) to **EN 60947-5-1**	
Blow-out fuse, quick	
Safety contacts:	**6 A**
Auxiliary contacts:	**6 A**
Blow-out fuse, slow	
Safety contacts:	**4 A**
Auxiliary contacts:	**4 A**
Circuit breaker 24 VAC/DC, characteristic B/C	
Safety contacts:	**4 A**
Auxiliary contacts:	**4 A**
Semiconductor outputs (short circuit proof)	**24.0 V DC**, **50 mA**
External supply voltage	**24.0 V DC**
Voltage tolerance	**-20 %/+20 %**
Semiconductor input	
High	**15 V DC**
Low	**5 V DC**
Input current	**20 mA**
Measuring circuit	
Input voltage L1-L3, L2-L3	**0 - 690 VAC/DC**
Input voltage in accordance with UL	**0 - 600 VAC**
Frequency range AC	**0 - 3000 Hz**
Input impedance	**1300 kOhm**
Switching threshold per channel	
Response value U_{on}	**120 - 3000 mV** No. 777950, 787950 **20 - 500 mV** No. 777949, 777959, 787949 **7.5 - 500 mV** No. 777951, 787951
Release value U_{off}	**2 x Uon**
Max. inrush current	**10.00 A**
Safety-related characteristic data	
PL in accordance with **EN ISO 13849-1: 2006**	**PL e** (**Cat. 4**)
Category in accordance with **EN 954-1**	**Cat. 4**
SIL CL in accordance with **EN IEC 62061**	**SIL CL 3**
PFH in accordance with **EN IEC 62061**	**6.23E-09**
SIL in accordance with **IEC 61511**	**SIL 3**
PFD in accordance with **IEC 61511**	**6.47E-05**
T_M [year] in accordance with **EN ISO 13849-1: 2006**	**20**
Times	
Switch-on delay	
with automatic reset typ.	**1,500 ms**
with automatic reset after power on max.	**2,200 ms**
Delay-on de-energisation after motor on max.	**170 ms**

Up to PL e of EN ISO 13849-1
PSWZ X1P

Times	
Recovery time at max. switching frequency 1/s	
after power failure	**2200 ms**
Simultaneity, channel 1 and 2	**7 s**
Supply interruption before de-energisation	**20 ms**
Environmental data	
EMC	**EN 60947-5-1**, **EN 61000-6-2**, **EN 61000-6-4**
Vibration to **EN 60068-2-6**	
Frequency	**10 - 55 Hz**
Amplitude	**0.35 mm**
Climatic suitability	**EN 60068-2-78**
Airgap creepage in accordance with **EN 60947-1**	
Pollution degree	**2**
Overvoltage category	**III**
Rated insulation voltage	**250 V**
Rated impulse withstand voltage	**4.00 kV**
Ambient temperature	**-10 - 55 °C**
Storage temperature	**-40 - 85 °C**
Protection type	
Mounting (e.g. cabinet)	**IP54**
Housing	**IP40**
Terminals	**IP20**
Mechanical data	
Housing material	
Housing	**PPO UL 94 V0**
Front	**ABS UL 94 V0**
Cross section of external conductors with screw terminals	
1 core flexible	**0.25 - 2.50 mm² , 24 - 14 AWG** No. 777949, 777950, 777951, 777959
2 core, same cross section, flexible:	
with crimp connectors, without insulating sleeve	**0.25 - 1.00 mm² , 24 - 16 AWG** No. 777949, 777950, 777951, 777959
without crimp connectors or with TWIN crimp connectors	**0.50 - 1.50 mm² , 24 - 16 AWG** No. 777949, 777950, 777951, 777959
Torque setting with screw terminals	**0.60 Nm** No. 777949, 777950, 777951, 777959
Cross section of external conductors with spring-loaded terminals: Flexible with/without crimp connectors	**0.20 - 1.50 mm² , 24 - 16 AWG** No. 787949, 787950, 787951
Spring-loaded terminals: Terminal points per connection	**2** No. 787949, 787950, 787951
Stripping length	**8 mm** No. 787949, 787950, 787951
Dimensions	
Height	**101.0 mm** No. 787949, 787950, 787951 **94.0 mm** No. 777949, 777950, 777951, 777959
Width	**45.0 mm**
Depth	**121.0 mm**
Weight	**315 g** No. 787949, 787950, 787951 **320 g** No. 777949, 777950, 777951, 777959

No. stands for order number.

It is essential to consider the relay's service life graphs. The relay outputs' safety-related characteristic data is only valid if the values in the service life graphs are met.

The PFH value depends on the switching frequency and the load on the relay output.
If the service life graphs are not accessible, the stated PFH value can be used irrespective of the switching frequency and the load, as the PFH value already considers the relay's B10d value as well as the failure rates of the other components.

All the units used within a safety function must be considered when calculating the safety characteristic data.

Pilz GmbH & Co. KG, Felix-Wankel-Straße 2, 73760 Ostfildern, Germany
Telephone: +49 711 3409-0, Telefax: +49 711 3409-133, E-Mail: pilz.gmbh@pilz.de

Up to PL e of EN ISO 13849-1
PSWZ X1P

INFORMATION
A safety function's SIL/PL values are **not** identical to the SIL/PL values of the units that are used and may be different. We recommend that you use the PAScal software tool to calculate the safety function's SIL/PL values.

The standards current on **2008-07** apply.

Order reference

Type	Features		Terminals	Order no.
PSWZ X1P C	24 - 240 VAC/DC	0.02 - 0.5 V	Spring-loaded terminals	787 949
PSWZ X1P	24 - 240 VAC/DC	0.02 - 0.5 V	Screw terminals	777 949
PSWZ X1P C	24 - 240 VAC/DC	0.12 - 3 V	Spring-loaded terminals	787 950
PSWZ X1P	24 - 240 VAC/DC	0.12 - 3 V	Screw terminals	777 950
PSWZ X1P C	24 - 240 VAC/DC	0.0075 – 0.5 V	Spring-loaded terminals	787 951
PSWZ X1P	24 - 240 VAC/DC	0.0075 – 0.5 V	Screw terminals	777 951
PSWZ X1P (coated version)	24 - 240 VAC/DC	0.02 - 0.5 V	Screw terminals	777 959

Up to PL e of EN ISO 13849-1
PZE X4P



Contact expansion module for increasing the number of available contacts

Approvals

	PZE X4P
c UL us LISTED	◆
TÜV	◆
CCC	◆

Unit features

- Positive-guided relay outputs:
  – 4 safety contacts (N/O), instantaneous
- LED indicator for:
  – Switch status channel 1/2
- Plug-in connection terminals (either spring-loaded terminal or screw terminal)
- See order reference for unit types

Unit description

The unit meets the requirements of EN 60947-5-1, EN 60204-1 and VDE 0113-1. The contact expansion module is used to increase the number of instantaneous safety contacts available on a base unit. Base units are all safety relays with feedback loop monitoring.
The category that can be achieved in accordance with EN 954-1 and EN ISO 13849-1 depends on the category of the base unit. The contact expansion module may not exceed this.

Safety features

The unit meets the following safety requirements:

- The contact expansion module expands an existing circuit. As the output relays are monitored via the base unit's feedback loop, the safety functions on the existing circuit are transferred to the contact expansion module.
- The safety function remains effective in the case of a component failure.
- Earth fault in the feedback loop: Detected, depending on the base unit that is used.
- Earth fault in the input circuit: The output relays de-energise and the safety contacts open.

Block diagram

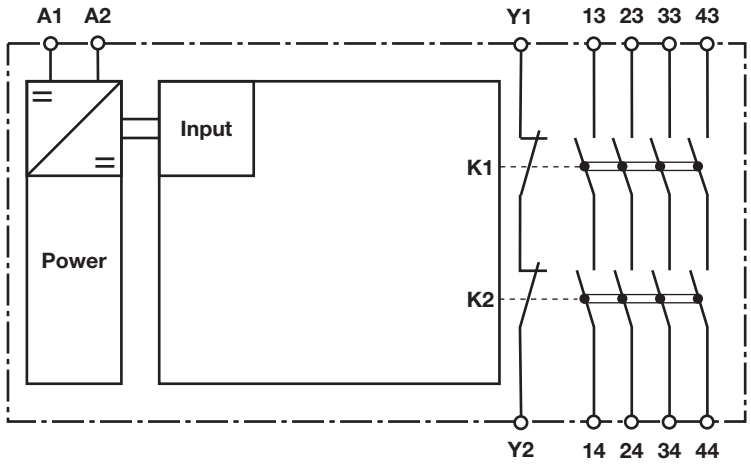

Pilz GmbH & Co. KG, Felix-Wankel-Straße 2, 73760 Ostfildern, Germany
Telephone: +49 711 3409-0, Telefax: +49 711 3409-133, E-Mail: pilz.gmbh@pilz.de

Up to PL e of EN ISO 13849-1
PZE X4P

Function description

- Single-channel operation: one input circuit affects both output relays

Timing diagram

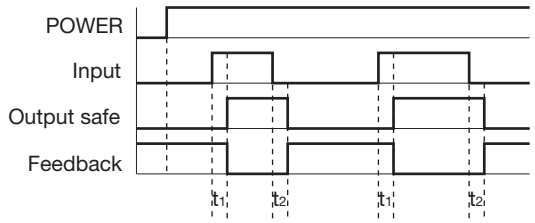

Key

- Power: Supply voltage
- Input: Input circuits A1
- Output safe: Safety contacts 13-14, 23-24, 33-34, 43-44
- Feedback: Feedback loop Y1-Y2
- t_1: Switch-on delay
- t_2: Delay-on de-energisation

Wiring

Please note:

- Information given in the “Technical details” must be followed.
- Outputs 13-14, 23-24, 33-34, 43-44 are safety contacts.
- To prevent contact welding, a fuse should be connected before the output contacts (see technical details).
- Calculation of the max. cable runs I_{max} in the input circuit:

$$I_{max} = \frac{R_{lmax}}{R_l / km}$$

R_{lmax} = max. overall cable resistance (see technical details)
R_l /km = cable resistance/km

- Use copper wire that can withstand 60/75 °C.
- Sufficient fuse protection must be provided on all output contacts with capacitive and inductive loads.

Up to PL e of EN ISO 13849-1
PZE X4P

Preparing for operation

- Supply voltage

Supply voltage	AC	DC
		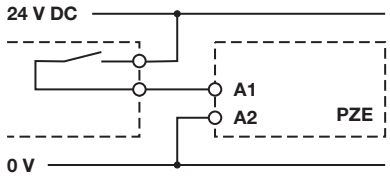

- Input circuit

Input circuit	Single-channel	Dual-channel
Base unit: PNOZ X safety relay	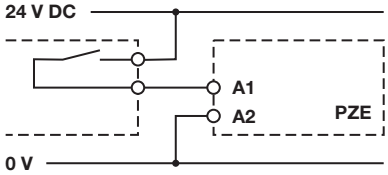	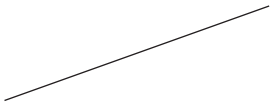
Base unit: PNOZelog safety relay Driven via semiconductor outputs (24 VDC)	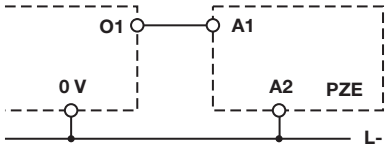	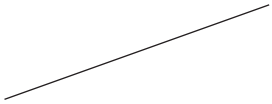

- Feedback loop

Feedback loop	Base unit: PNOZ X safety relay	Base unit: PNOZelog safety relay
Y1, Y2 and Input are inputs on the base unit; they evaluate the feedback loop	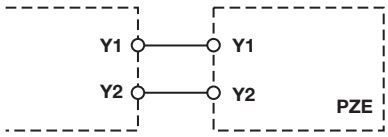	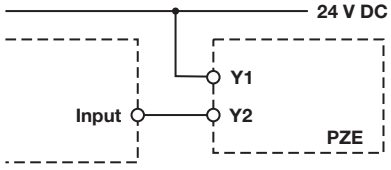

Pilz GmbH & Co. KG, Felix-Wankel-Straße 2, 73760 Ostfildern, Germany
Telephone: +49 711 3409-0, Telefax: +49 711 3409-133, E-Mail: pilz.gmbh@pilz.de

Up to PL e of EN ISO 13849-1
PZE X4P

Terminal configuration

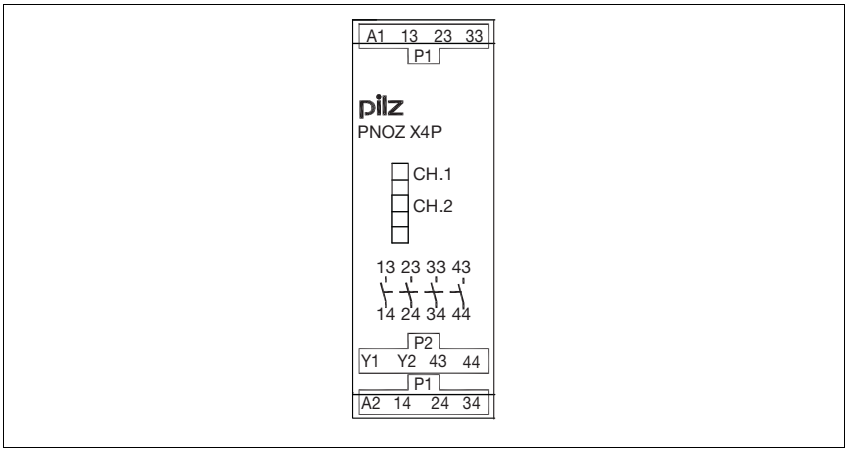

Installation

- The safety relay should be installed in a control cabinet with a protection type of at least IP54.
- Use the notch on the rear of the unit to attach it to a DIN rail.
- Ensure the unit is mounted securely on a vertical DIN rail (35 mm) by using a fixing element (e.g. retaining bracket or an end angle).

Dimensions

* with spring-loaded terminals

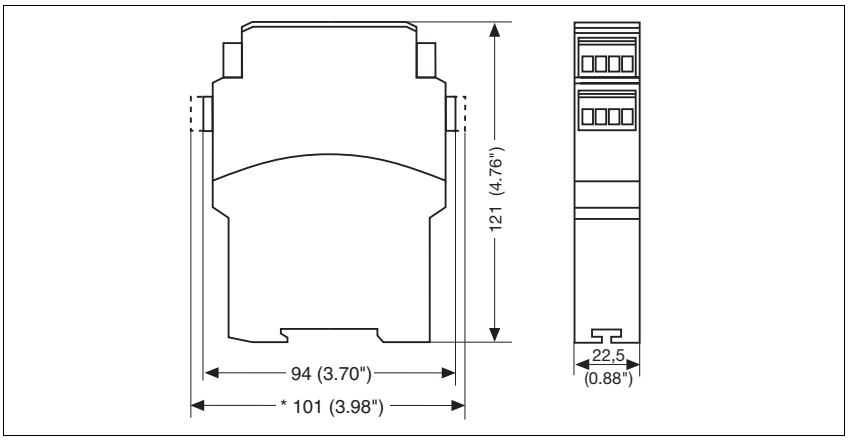

Up to PL e of EN ISO 13849-1
PZE X4P

Notice

This data sheet is only intended for use during configuration. Please refer to the operating manual for installation and operation.

Service life graph

The service life graphs indicate the number of cycles from which failures due to wear must be expected. The wear is mainly caused by the electrical load; the mechanical load is negligible.

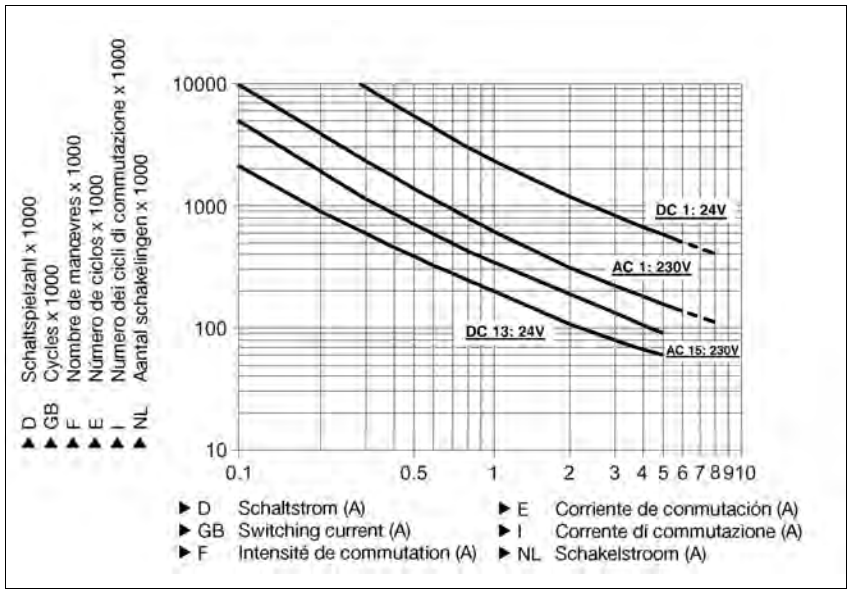

Example
- Inductive load: 0,2 A
- Utilisation category: AC15
- Contact service life: 2,000,000 cycles

Provided the application requires fewer than 2,000,000 cycles, the PFH value (see technical details) can be used in the calculation.

To increase the service life, sufficient spark suppression must be provided on all output contacts. With capacitive loads, any power surges that occur must be noted. With contactors, use freewheel diodes for spark suppression.

Technical details

Electrical data	
Supply voltage	
Supply voltage U_B DC	**24 V**
Voltage tolerance	**-15 %/+10 %**
Power consumption at U_B DC	**2.5 W**
Residual ripple DC	**20 %**
Voltage and current at	
Input circuit DC: **24.0 V**	**95.0 mA**
Number of output contacts	
Safety contacts (S) instantaneous:	**4**

Pilz GmbH & Co. KG, Felix-Wankel-Straße 2, 73760 Ostfildern, Germany
Telephone: +49 711 3409-0, Telefax: +49 711 3409-133, E-Mail: pilz.gmbh@pilz.de

Up to PL e of EN ISO 13849-1
PZE X4P

Electrical data	
Utilisation category in accordance with **EN 60947-4-1**	
Safety contacts: AC1 at **240 V**	I_{min}: **0.01 A** , I_{max}: **6.0 A** P_{max}: **1500 VA**
Safety contacts: DC1 at **24 V**	I_{min}: **0.01 A** , I_{max}: **6.0 A** P_{max}: **150 W**
Utilisation category in accordance with **EN 60947-5-1**	
Safety contacts: AC15 at **230 V**	I_{max}: **5.0 A**
Safety contacts: DC13 at **24 V** (6 cycles/min)	I_{max}: **5.0 A**
Contact material	**AgCuNi + 0.2 µm Au**
External contact fuse protection (I_K = 1 kA) to **EN 60947-5-1**	
Blow-out fuse, quick	
Safety contacts:	**10 A**
Blow-out fuse, slow	
Safety contacts:	**6 A**
Circuit breaker 24 VAC/DC, characteristic B/C	
Safety contacts:	**6 A**
Max. overall cable resistance R_{lmax} per input circuit	
single-channel at U_B DC	**30 Ohm**
Safety-related characteristic data	
PL in accordance with **EN ISO 13849-1: 2006**	**PL e** (**Cat. 4**)
Category in accordance with **EN 954-1**	**Cat. 4**
SIL CL in accordance with **EN IEC 62061**	**SIL CL 3**
PFH in accordance with **EN IEC 62061**	**2.31E-09**
SIL in accordance with **IEC 61511**	**SIL 3**
PFD in accordance with **IEC 61511**	**2.03E-06**
T_M [year] in accordance with **EN ISO 13849-1: 2006**	**20**
Times	
Switch-on delay	
with automatic reset after power on typ.	**30 ms**
with automatic reset after power on max.	**50 ms**
Delay-on de-energisation	
with E-STOP typ.	**30 ms**
with E-STOP max.	**50 ms**
with power failure typ.	**30 ms**
with power failure max.	**50 ms**
Supply interruption before de-energisation	**20 ms**
Environmental data	
EMC	**EN 60947-5-1**, **EN 61000-6-2**
Vibration to **EN 60068-2-6**	
Frequency	**10 - 55 Hz**
Amplitude	**0.35 mm**
Climatic suitability	**EN 60068-2-78**
Airgap creepage in accordance with **EN 60947-1**	
Pollution degree	**2**
Overvoltage category	**III**
Rated insulation voltage	**250 V**
Rated impulse withstand voltage	**4.00 kV**
Ambient temperature	**-10 - 55 °C**
Storage temperature	**-40 - 85 °C**
Protection type	
Mounting (e.g. cabinet)	**IP54**
Housing	**IP40**
Terminals	**IP20**

Up to PL e of EN ISO 13849-1
PZE X4P

Mechanical data	
Housing material	
Housing	**PPO UL 94 V0**
Front	**ABS UL 94 V0**
Cross section of external conductors with screw terminals	
1 core flexible	**0.25 - 2.50 mm² , 24 - 12 AWG** No. 777585
2 core, same cross section, flexible:	
with crimp connectors, without insulating sleeve	**0.25 - 1.00 mm² , 24 - 16 AWG** No. 777585
without crimp connectors or with TWIN crimp connectors	**0.20 - 1.50 mm² , 24 - 16 AWG** No. 777585
Torque setting with screw terminals	**0.50 Nm** No. 777585
Cross section of external conductors with spring-loaded terminals: Flexible with/without crimp connectors	**0.20 - 1.50 mm² , 24 - 16 AWG** No. 787585
Spring-loaded terminals: Terminal points per connection	**2** No. 787585
Stripping length	**8 mm** No. 787585
Dimensions	
Height	**101.0 mm** No. 787585 **94.0 mm** No. 777585
Width	**22.5 mm**
Depth	**121.0 mm**
Weight	**170 g**

No. stands for order number.

It is essential to consider the relay's service life graphs. The relay outputs' safety-related characteristic data is only valid if the values in the service life graphs are met.

The PFH value depends on the switching frequency and the load on the relay output.
If the service life graphs are not accessible, the stated PFH value can be used irrespective of the switching frequency and the load, as the PFH value already considers the relay's B10d value as well as the failure rates of the other components.

All the units used within a safety function must be considered when calculating the safety characteristic data.

INFORMATION
A safety function's SIL/PL values are **not** identical to the SIL/PL values of the units that are used and may be different. We recommend that you use the PAScal software tool to calculate the safety function's SIL/PL values.

The standards current on **2009-12** apply.

Pilz GmbH & Co. KG, Felix-Wankel-Straße 2, 73760 Ostfildern, Germany
Telephone: +49 711 3409-0, Telefax: +49 711 3409-133, E-Mail: pilz.gmbh@pilz.de

Up to PL e of EN ISO 13849-1
PZE X4P

Conventional thermal current while loading several contacts

Number of contacts	I_{th} per contact at U_B DC
1	**6.00 A**
2	**6.00 A**
3	**5.00 A**
4	**4.00 A**

Order reference

Type	Features		Terminals	Order no.
PZE X4P C		24 VDC	Spring-loaded terminals	787 585
PZE X4P		24 VDC	Screw terminals	777 585

Up to PL e of EN ISO 13849-1
PZE X4.1P



Contact expansion module for increasing the number of available contacts

Approvals

	PZE X4.1P
cULus LISTED	◆
TÜV	◆
CCC	◆

Unit features

- Positive-guided relay outputs:
  - 4 safety contacts (N/O), instantaneous
- Safe separation of safety contacts 13-14, 23-24, 33-34 from input circuits K1-U-K2 and feedback loop Y1-Y2
- LED indicator for:
  - Switch status channel 1/2
  - Supply voltage
- Plug-in connection terminals (either spring-loaded terminal or screw terminal)
- Suitable to be driven via a semiconductor output
- See order reference for unit types

Unit description

The unit meets the requirements of EN 60204-1 and IEC 60204-1. The contact expansion module is used to increase the number of contacts available on a base unit. Base units are all

- Safety relays with feedback loop
- Programmable safety systems with feedback loop
- Units with OSSD semiconductor outputs and feedback loop

The category that can be achieved in accordance with EN 954-1 and EN ISO 13849-1 depends on the category of the base unit. The contact expansion module may not exceed this.

Safety features

The unit meets the following safety requirements:

- The contact expansion module expands an existing circuit. As the output relays are monitored via the base unit's feedback loop, the safety functions on the existing circuit are transferred to the contact expansion module.
- The safety function remains effective in the case of a component failure.
- Earth fault in the feedback loop: Detected, depending on the base unit that is used.
- Earth fault in the input circuit: The output relays de-energise and the safety contacts open.

Block diagram

* Safe separation in accordance with EN 60947-1, 6 kV (see unit features)

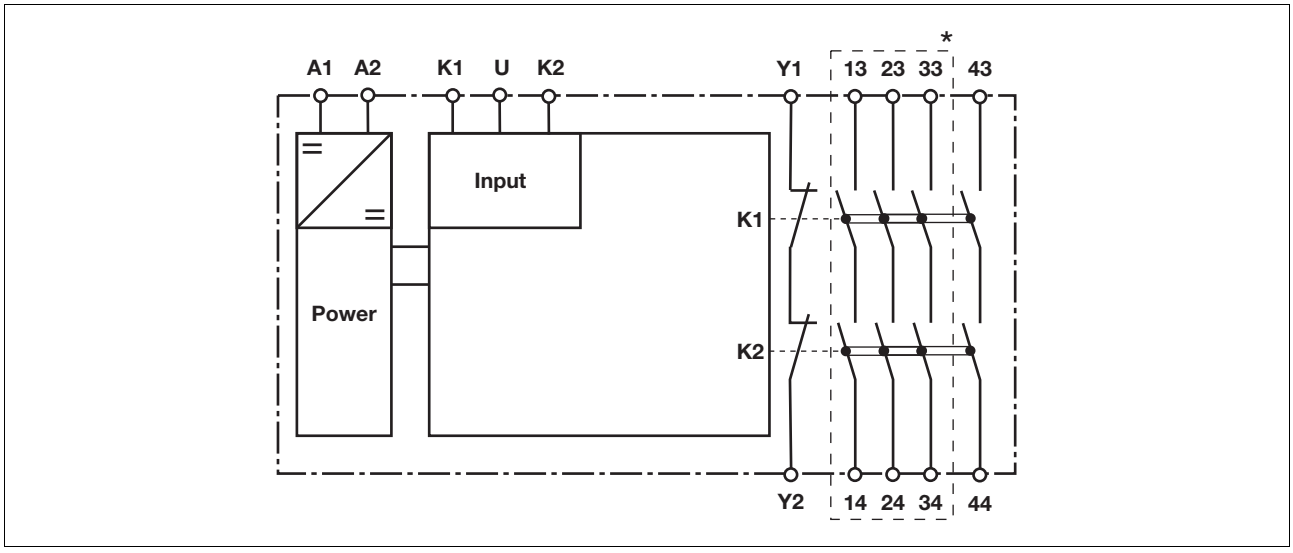

Pilz GmbH & Co. KG, Felix-Wankel-Straße 2, 73760 Ostfildern, Germany
Telephone: +49 711 3409-0, Telefax: +49 711 3409-133, E-Mail: pilz.gmbh@pilz.de

Up to PL e of EN ISO 13849-1
PZE X4.1P

Function description

- Single-channel operation: one input circuit affects both output relays
- Dual-channel operation:
  - two redundant input circuits affect one output relay
  - Detection of shorts across contacts only possible with pulsed inputs

Timing diagram

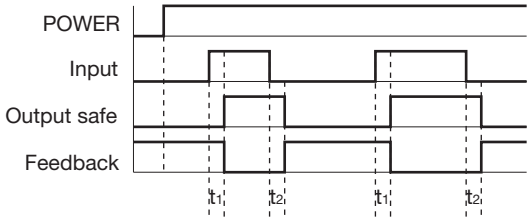

Key

- Power: Supply voltage
- Input: Input circuits K1-U-K2
- Output safe: Safety contacts 13-14, 23-24, 33-34, 43-44
- Feedback: Feedback loop Y1-Y2
- t_1: Switch-on delay
- t_2: Delay-on de-energisation

Wiring

Please note:

- Information given in the “Technical details” must be followed.
- Outputs 13-14, 23-24, 33-34, 43-44 are safety contacts.
- To prevent contact welding, a fuse should be connected before the output contacts (see technical details).
- Calculation of the max. cable runs l_{max} in the input circuit:

$$l_{max} = \frac{R_{lmax}}{R_l / km}$$

R_{lmax} = max. overall cable resistance (see technical details)
R_l /km = cable resistance/km

- Use copper wire that can withstand 60/75 °C.
- Sufficient fuse protection must be provided on all output contacts with capacitive and inductive loads.

Pilz GmbH & Co. KG, Felix-Wankel-Straße 2, 73760 Ostfildern, Germany
Telephone: +49 711 3409-0, Telefax: +49 711 3409-133, E-Mail: pilz.gmbh@pilz.de

Up to PL e of EN ISO 13849-1
PZE X4.1P

Preparing for operation

▸ Supply voltage

Supply voltage	AC	DC
Only when driven via safety relay with safety contacts	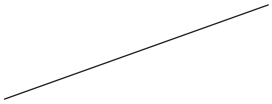	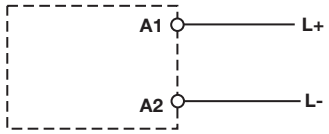

▸ Input circuit

Input circuit	Single-channel	Dual-channel
Base unit: PNOZ X safety relay Driven via safety contacts	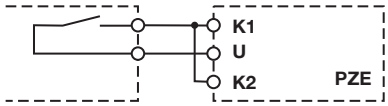	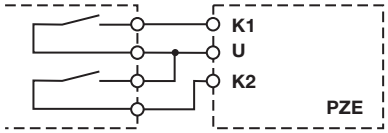
Base unit: PNOZelog safety relay, programmable safety system or PNOZmulti Driven via safe semiconductor outputs (24 VDC)	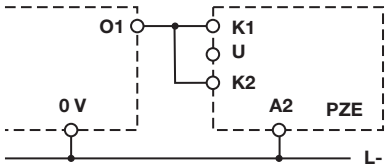	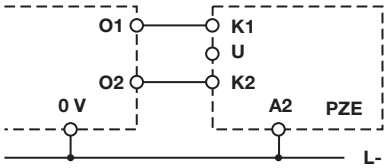

▸ Feedback loop

Feedback loop	Base unit: PNOZ X safety relay	Base unit: PNOZelog safety relay, programmable safety system or PNOZmulti
Y1, Y2 and Input are inputs on the base unit; they evaluate the feedback loop	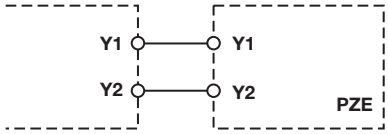	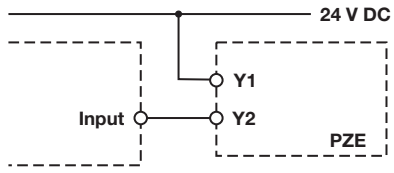

Pilz GmbH & Co. KG, Felix-Wankel-Straße 2, 73760 Ostfildern, Germany
Telephone: +49 711 3409-0, Telefax: +49 711 3409-133, E-Mail: pilz.gmbh@pilz.de

Up to PL e of EN ISO 13849-1
PZE X4.1P

Terminal configuration

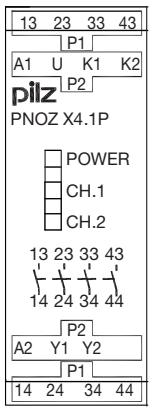

Installation

- The safety relay should be installed in a control cabinet with a protection type of at least IP54.
- Use the notch on the rear of the unit to attach it to a DIN rail.
- Ensure the unit is mounted securely on a vertical DIN rail (35 mm) by using a fixing element (e.g. retaining bracket or an end angle).

Dimensions

* with spring-loaded terminals

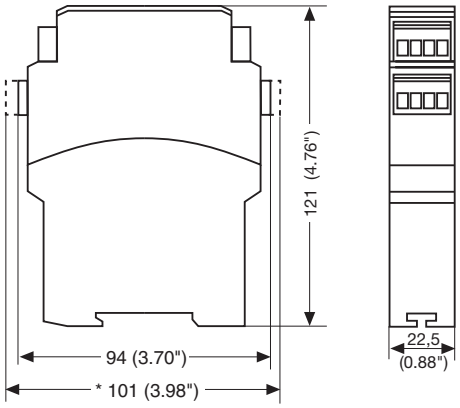

Up to PL e of EN ISO 13849-1
PZE X4.1P

Notice

This data sheet is only intended for use during configuration. Please refer to the operating manual for installation and operation.

Service life graph

The service life graphs indicate the number of cycles from which failures due to wear must be expected. The wear is mainly caused by the electrical load; the mechanical load is negligible.

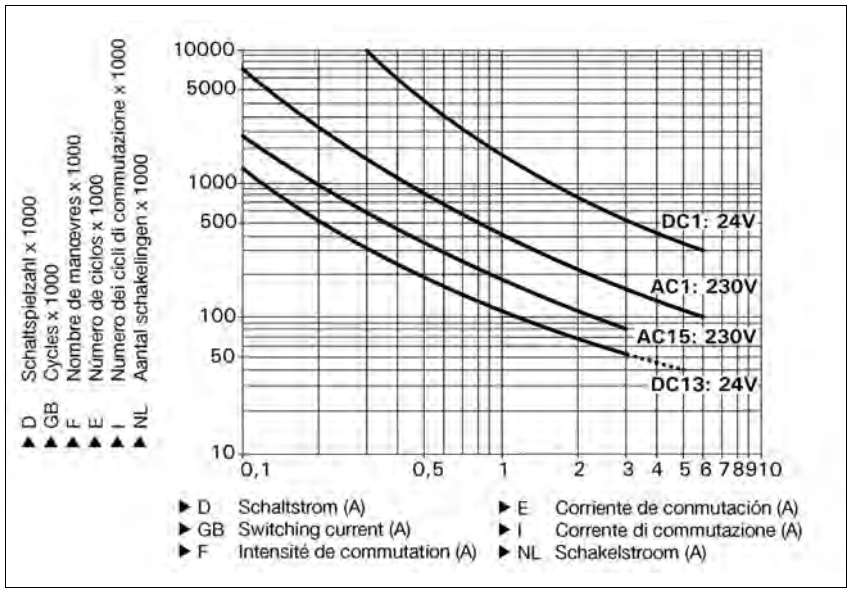

Example
- Inductive load: 0,2 A
- Utilisation category: AC15
- Contact service life: 1,000,000 cycles

Provided the application requires fewer than 1,000,000 cycles, the PFH value (see technical details) can be used in the calculation.

To increase the service life, sufficient spark suppression must be provided on all output contacts. With capacitive loads, any power surges that occur must be noted. With contactors, use freewheel diodes for spark suppression.

Technical details	
Electrical data	
Supply voltage	
Supply voltage U_B DC	**24 V**
Voltage tolerance	**-15 %/+10 %**
Power consumption at U_B DC	**2.5 W**
Frequency range AC	**50 - 60 Hz**
Residual ripple DC	**20 %**
Voltage and current at	
Input circuit DC: **24.0 V**	**35.0 mA**
Number of output contacts	
Safety contacts (S) instantaneous:	**4**

Pilz GmbH & Co. KG, Felix-Wankel-Straße 2, 73760 Ostfildern, Germany
Telephone: +49 711 3409-0, Telefax: +49 711 3409-133, E-Mail: pilz.gmbh@pilz.de

Up to PL e of EN ISO 13849-1
PZE X4.1P

Electrical data	
Utilisation category in accordance with **EN 60947-4-1**	
Safety contacts: AC1 at **240 V**	I_{min}: **0.01 A** , I_{max}: **6.0 A** P_{max}: **1500 VA**
Safety contacts: DC1 at **24 V**	I_{min}: **0.01 A** , I_{max}: **6.0 A** P_{max}: **150 W**
Utilisation category in accordance with **EN 60947-5-1**	
Safety contacts: AC15 at **230 V**	I_{max}: **3.0 A**
Safety contacts: DC13 at **24 V** (6 cycles/min)	I_{max}: **4.0 A**
Contact material	**AgCuNi + 0.2 µm Au**
External contact fuse protection (I_K = 1 kA) to **EN 60947-5-1**	
Blow-out fuse, quick	
Safety contacts:	**6 A**
Blow-out fuse, slow	
Safety contacts:	**4 A**
Circuit breaker 24 VAC/DC, characteristic B/C	
Safety contacts:	**4 A**
Max. overall cable resistance R_{lmax} per input circuit	
single-channel at U_B DC	**30 Ohm**
dual-channel without detect. of shorts across contacts at U_B DC	**60 Ohm**
Safety-related characteristic data	
PL in accordance with **EN ISO 13849-1: 2006**	**PL e** (**Cat. 4**)
Category in accordance with **EN 954-1**	**Cat. 4**
SIL CL in accordance with **EN IEC 62061**	**SIL CL 3**
PFH in accordance with **EN IEC 62061**	**2.31E-09**
SIL in accordance with **IEC 61511**	**SIL 3**
PFD in accordance with **IEC 61511**	**2.03E-06**
T_M [year] in accordance with **EN ISO 13849-1: 2006**	**20**
Times	
Switch-on delay	
with automatic reset typ.	**13 ms**
with automatic reset max.	**20 ms**
with automatic reset after power on typ.	**16 ms**
with automatic reset after power on max.	**30 ms**
Delay-on de-energisation	
with E-STOP typ.	**10 ms**
with E-STOP max.	**20 ms**
with power failure typ.	**58 ms**
with power failure max.	**80 ms**
Supply interruption before de-energisation	**20 ms**
Supply interruption before de-energisation in the input circuit	**2.5 ms**
Environmental data	
EMC	**EN 60947-5-1**, **EN 61000-6-2**, **EN 61000-6-4**
Vibration to **EN 60068-2-6**	
Frequency	**10 - 55 Hz**
Amplitude	**0.35 mm**
Climatic suitability	**EN 60068-2-78**
Airgap creepage in accordance with **EN 60947-1**	
Pollution degree	**2**
Overvoltage category	**III**
Rated insulation voltage	**250 V**
Rated impulse withstand voltage	**6.00 kV**
Ambient temperature	**-10 - 55 °C**
Storage temperature	**-40 - 85 °C**
Protection type	
Mounting (e.g. cabinet)	**IP54**
Housing	**IP40**
Terminals	**IP20**

Up to PL e of EN ISO 13849-1
PZE X4.1P

Mechanical data	
Housing material	
Housing	**PPO UL 94 V0**
Front	**ABS UL 94 V0**
Cross section of external conductors with screw terminals	
1 core flexible	**0.25 - 2.50 mm² , 24 - 12 AWG** No. 777587
2 core, same cross section, flexible:	
with crimp connectors, without insulating sleeve	**0.25 - 1.00 mm² , 24 - 16 AWG** No. 777587
without crimp connectors or with TWIN crimp connectors	**0.20 - 1.50 mm² , 24 - 16 AWG** No. 777587
Torque setting with screw terminals	**0.50 Nm** No. 777587
Cross section of external conductors with spring-loaded terminals: Flexible with/without crimp connectors	**0.20 - 1.50 mm² , 24 - 16 AWG** No. 787587
Spring-loaded terminals: Terminal points per connection	**2** No. 787587
Stripping length	**8 mm** No. 787587
Dimensions	
Height	**101.0 mm** No. 787587 **94.0 mm** No. 777587
Width	**22.5 mm**
Depth	**121.0 mm**
Weight	**180 g** No. 787587 **185 g** No. 777587

No. stands for order number.

It is essential to consider the relay's service life graphs. The relay outputs' safety-related characteristic data is only valid if the values in the service life graphs are met.

The PFH value depends on the switching frequency and the load on the relay output.
If the service life graphs are not accessible, the stated PFH value can be used irrespective of the switching frequency and the load, as the PFH value already considers the relay's B10d value as well as the failure rates of the other components.

All the units used within a safety function must be considered when calculating the safety characteristic data.

INFORMATION
A safety function's SIL/PL values are **not** identical to the SIL/PL values of the units that are used and may be different. We recommend that you use the PAScal software tool to calculate the safety function's SIL/PL values.

The standards current on **2008-12** apply.

Pilz GmbH & Co. KG, Felix-Wankel-Straße 2, 73760 Ostfildern, Germany
Telephone: +49 711 3409-0, Telefax: +49 711 3409-133, E-Mail: pilz.gmbh@pilz.de

Up to PL e of EN ISO 13849-1
PZE X4.1P

Conventional thermal current while loading several contacts

Number of contacts	I_{th} per contact at U_B DC
1	**6.00 A**
2	**6.00 A**
3	**4.50 A**
4	**3.50 A**

Order reference

Type	Features		Terminals	Order no.
PZE X4.1P C		24 VDC	Spring-loaded terminals	787 587
PZE X4.1P		24 VDC	Screw terminals	777 587

Up to PL d of EN ISO 13849-1
PZE X4VP



Contact expansion module for increasing the number of available contacts

Approvals

	PZE X4VP
c UL us LISTED	◆
TÜV SÜD	◆
CCC	◆

Unit features

- Positive-guided relay outputs:
  – 4 safety contacts (N/O), delay-on de-energisation
- LED indicator for:
  – Switch status channel 1/2
- Plug-in connection terminals (either spring-loaded terminal or screw terminal)
- See order reference for unit types

Unit description

The unit meets the requirements of EN 60947-5-1, EN 60204-1 and VDE 0113-1. The contact expansion module is used to increase the number of instantaneous safety contacts available on a base unit. Base units are all safety relays with feedback loop monitoring.
The category that can be achieved in accordance with EN 954-1 and EN ISO 13849-1 depends on the category of the base unit. The contact expansion module may not exceed this. The delay-on de-energisation safety contacts may only be used up to category 3.

Safety features

The unit meets the following safety requirements:

- The contact expansion module expands an existing circuit. As the output relays are monitored via the base unit's feedback loop, the safety functions on the existing circuit are transferred to the contact expansion module.
- The safety function remains effective in the case of a component failure.
- Earth fault in the feedback loop: Detected, depending on the base unit that is used.
- Earth fault in the input circuit: The output relays de-energise and the safety contacts open.

Block diagram

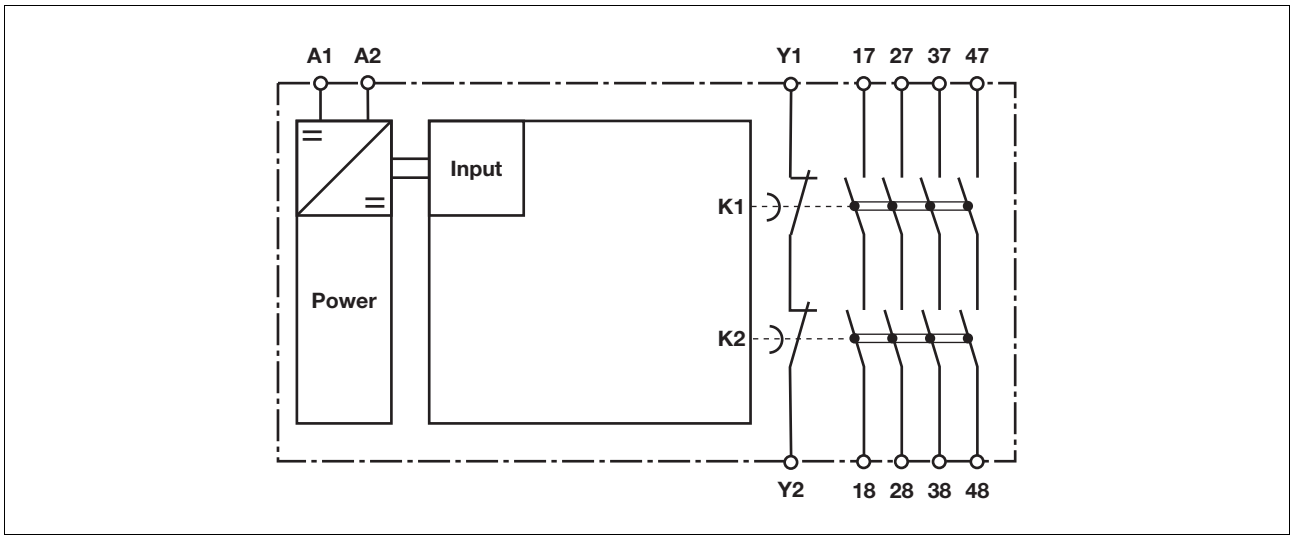

Pilz GmbH & Co. KG, Felix-Wankel-Straße 2, 73760 Ostfildern, Germany
Telephone: +49 711 3409-0, Telefax: +49 711 3409-133, E-Mail: pilz.gmbh@pilz.de

Up to PL d of EN ISO 13849-1
PZE X4VP

Function description

- Single-channel operation: one input circuit affects both output relays

Timing diagram

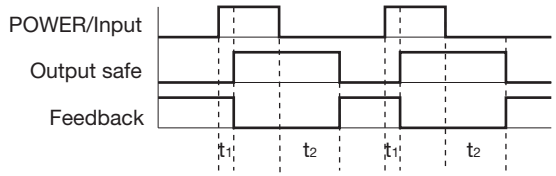

Key

- Power: Supply voltage
- Input: Input circuits A1
- Output safe: Safety contacts 17-18, 27-28, 37-38, 47-48
- Feedback: Feedback loop Y1-Y2
- t_1: Switch-on delay
- t_2: Delay-on de-energisation

Wiring

Please note:

- Information given in the “Technical details” must be followed.
- Outputs 17-18, 27-28, 37-38, 47-48 are delay-on de-energisation safety contacts.
- To prevent contact welding, a fuse should be connected before the output contacts (see technical details).
- Calculation of the max. cable runs I_{max} in the input circuit:

$$I_{max} = \frac{R_{lmax}}{R_l / km}$$

R_{lmax} = max. overall cable resistance (see technical details)
R_l / km = cable resistance/km

- Use copper wire that can withstand 60/75 °C.
- Sufficient fuse protection must be provided on all output contacts with capacitive and inductive loads.

Up to PL d of EN ISO 13849-1
PZE X4VP

Preparing for operation

- Supply voltage

Supply voltage	AC	DC
		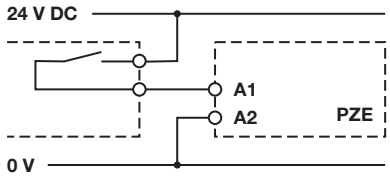

- Input circuit

Input circuit	Single-channel	Dual-channel
Base unit: Safety relay PNOZ X Driven via safety contacts	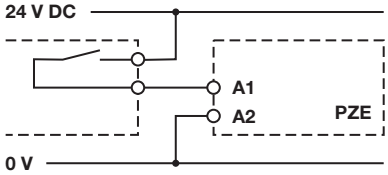	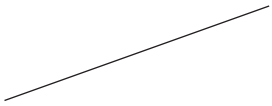
Base unit: Safety relay PNOZmulti Driven via semiconductor outputs (24 VDC)	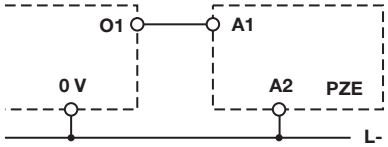	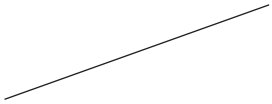

- Feedback circuit

Feedback circuit	Base unit: Safety relay PNOZ X	Base unit: Safety relay PNOZmulti
Y1, Y2 and Input are inputs on the base unit; they evaluate the feedback loop	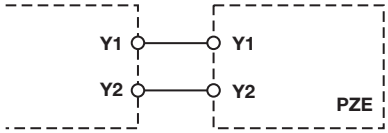	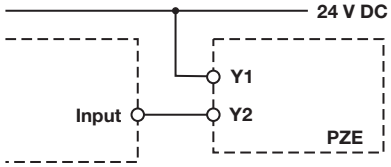

Pilz GmbH & Co. KG, Felix-Wankel-Straße 2, 73760 Ostfildern, Germany
Telephone: +49 711 3409-0, Telefax: +49 711 3409-133, E-Mail: pilz.gmbh@pilz.de

Up to PL d of EN ISO 13849-1
PZE X4VP

Terminal configuration

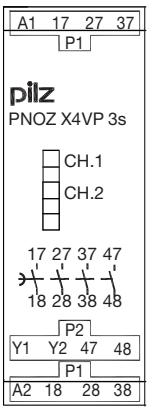

Installation

- The safety relay should be installed in a control cabinet with a protection type of at least IP54.
- Use the notch on the rear of the unit to attach it to a DIN rail.
- Ensure the unit is mounted securely on a vertical DIN rail (35 mm) by using a fixing element (e.g. retaining bracket or an end angle).

Dimensions

* with spring-loaded terminals

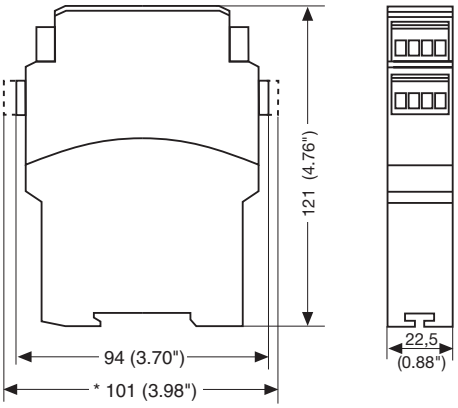

Up to PL d of EN ISO 13849-1
PZE X4VP

Notice

This data sheet is only intended for use during configuration. Please refer to the operating manual for installation and operation.

Service life graph

The service life graphs indicate the number of cycles from which failures due to wear must be expected. The wear is mainly caused by the electrical load; the mechanical load is negligible.

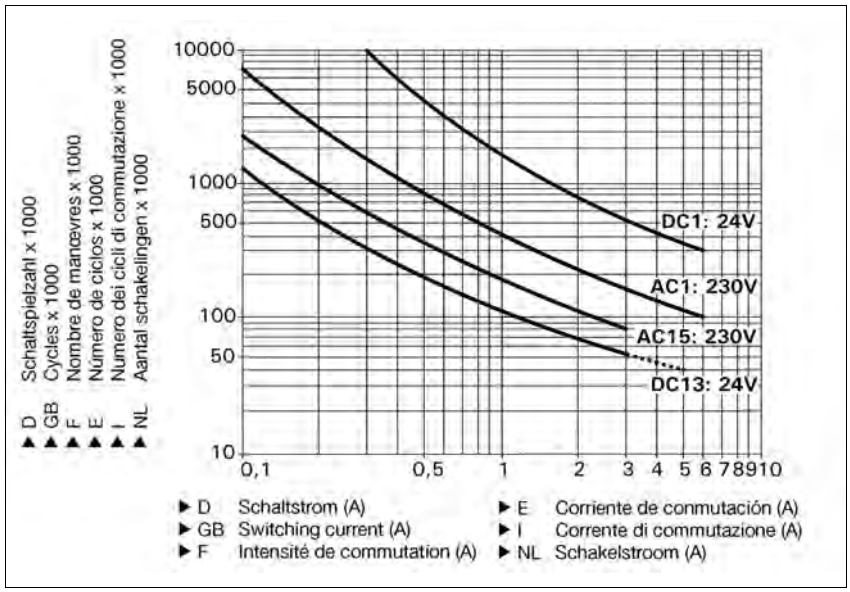

Example
- Inductive load: 0,2 A
- Utilisation category: AC15
- Contact service life: 1,000,000 cycles

Provided the application requires fewer than 1,000,000 cycles, the PFH value (see technical details) can be used in the calculation.

To increase the service life, sufficient spark suppression must be provided on all output contacts. With capacitive loads, any power surges that occur must be noted. With contactors, use freewheel diodes for spark suppression.

Technical details

Electrical data	
Supply voltage	
Supply voltage U_B DC	**24 V**
Voltage tolerance	**-15 %/+10 %**
Power consumption at U_B DC	**2.5 W**
Residual ripple DC	**20 %**
Voltage and current at	
Input circuit DC: **24.0 V**	**95.0 mA**
Number of output contacts	
Safety contacts (N/O), delayed:	**4**

Pilz GmbH & Co. KG, Felix-Wankel-Straße 2, 73760 Ostfildern, Germany
Telephone: +49 711 3409-0, Telefax: +49 711 3409-133, E-Mail: pilz.gmbh@pilz.de

Up to PL d of EN ISO 13849-1
PZE X4VP

Electrical data	
Utilisation category in accordance with **EN 60947-4-1**	
Safety contacts, delayed: AC1 at **240 V**	I_{min}: **0.01 A** , I_{max}: **6.0 A** P_{max}: **1500 VA**
Safety contacts, delayed: DC1 at **24 V**	I_{min}: **0.01 A** , I_{max}: **6.0 A** P_{max}: **150 W**
Utilisation category in accordance with **EN 60947-5-1**	
Safety contacts, delayed: AC15 at **230 V**	I_{max}: **3.0 A**
Safety contacts, delayed: DC13 at **24 V** (6 cycles/min)	I_{max}: **4.0 A**
Contact material	**AgCuNi + 0.2 µm Au**
External contact fuse protection (I_K = 1 kA) to **EN 60947-5-1**	
Blow-out fuse, quick	
Safety contacts:	**6 A**
Blow-out fuse, slow	
Safety contacts:	**4 A**
Circuit breaker 24 VAC/DC, characteristic B/C	
Safety contacts:	**4 A**
Max. overall cable resistance R_{lmax} per input circuit	
single-channel at U_B DC	**30 Ohm**
Safety-related characteristic data	
PL in accordance with **EN ISO 13849-1: 2006**	**PL d** (**Cat. 3**)
Category in accordance with **EN 954-1**	**Cat. 3**
SIL CL in accordance with **EN IEC 62061**	**SIL CL 2**
PFH in accordance with **EN IEC 62061**	**2.48E-09**
SIL in accordance with **IEC 61511**	**SIL 2**
PFD in accordance with **IEC 61511**	**1.47E-05**
T_M [year] in accordance with **EN ISO 13849-1: 2006**	**20**
Times	
Switch-on delay	
with automatic reset after power on typ.	**55 ms**
with automatic reset after power on max.	**200 ms**
Delay-on de-energisation	
Delay time t_V: fixed	**0.50 s** No. 777580, 787580 **1.00 s** No. 777581, 787581 **2.00 s** No. 777582, 787582 **3.00 s** No. 777583, 787583
Time accuracy	**-50 %/+50 %**
Supply interruption before de-energisation	**20 ms**
Environmental data	
EMC	**EN 60947-5-1**, **EN 61000-6-2**
Vibration to **EN 60068-2-6**	
Frequency	**10 - 55 Hz**
Amplitude	**0.35 mm**
Climatic suitability	**EN 60068-2-78**
Airgap creepage in accordance with **EN 60947-1**	
Pollution degree	**2**
Overvoltage category	**III**
Rated insulation voltage	**250 V**
Rated impulse withstand voltage	**4.00 kV**
Ambient temperature	**-10 - 55 °C**
Storage temperature	**-40 - 85 °C**
Protection type	
Mounting (e.g. cabinet)	**IP54**
Housing	**IP40**
Terminals	**IP20**

Up to PL d of EN ISO 13849-1
PZE X4VP

Mechanical data	
Housing material	
Housing	**PPO UL 94 V0**
Front	**ABS UL 94 V0**
Cross section of external conductors with screw terminals	
1 core flexible	**0.25 - 2.50 mm² , 24 - 12 AWG** No. 777580, 777581, 777582, 777583
2 core, same cross section, flexible:	
with crimp connectors, without insulating sleeve	**0.25 - 1.00 mm² , 24 - 16 AWG** No. 777580, 777581, 777582, 777583
without crimp connectors or with TWIN crimp connectors	**0.20 - 1.50 mm² , 24 - 16 AWG** No. 777580, 777581, 777582, 777583
Torque setting with screw terminals	**0.50 Nm** No. 777580, 777581, 777582, 777583
Cross section of external conductors with spring-loaded terminals: Flexible with/without crimp connectors	**0.20 - 1.50 mm² , 24 - 16 AWG** No. 787580, 787581, 787582, 787583
Spring-loaded terminals: Terminal points per connection	**2** No. 787580, 787581, 787582, 787583
Stripping length	**8 mm** No. 787580, 787581, 787582, 787583
Dimensions	
Height	**101.0 mm** No. 787580, 787581, 787582, 787583 **94.0 mm** No. 777580, 777581, 777582, 777583
Width	**22.5 mm**
Depth	**121.0 mm**
Weight	**180 g** No. 777580, 787580 **185 g** No. 777581, 787581 **195 g** No. 777582, 787582 **200 g** No. 777583, 787583

No. stands for order number.

It is essential to consider the relay's service life graphs. The relay outputs' safety-related characteristic data is only valid if the values in the service life graphs are met.

The PFH value depends on the switching frequency and the load on the relay output.
If the service life graphs are not accessible, the stated PFH value can be used irrespective of the switching frequency and the load, as the PFH value already considers the relay's B10d value as well as the failure rates of the other components.

All the units used within a safety function must be considered when calculating the safety characteristic data.

INFORMATION
A safety function's SIL/PL values are **not** identical to the SIL/PL values of the units that are used and may be different. We recommend that you use the PAScal software tool to calculate the safety function's SIL/PL values.

The standards current on **2006-06** apply.

Pilz GmbH & Co. KG, Felix-Wankel-Straße 2, 73760 Ostfildern, Germany
Telephone: +49 711 3409-0, Telefax: +49 711 3409-133, E-Mail: pilz.gmbh@pilz.de

Up to PL d of EN ISO 13849-1
PZE X4VP

Conventional thermal current while loading several contacts

Number of contacts	I_{th} per contact at U_B DC
1	**6.00 A**
2	**5.00 A**
3	**4.50 A**
4	**4.00 A**

Order reference

Type	Features			Terminals	Order no.
PZE X4VP C		24 VDC	0.5 s fixed	Spring-loaded terminals	787 580
PZE X4VP		24 VDC	0.5 s fixed	Screw terminals	777 580
PZE X4VP C		24 VDC	1 s fixed	Spring-loaded terminals	787 581
PZE X4VP		24 VDC	1 s fixed	Screw terminals	777 581
PZE X4VP C		24 VDC	2 s fixed	Spring-loaded terminals	787 582
PZE X4VP		24 VDC	2 s fixed	Screw terminals	777 582
PZE X4VP C		24 VDC	3 s fixed	Spring-loaded terminals	787 583
PZE X4VP		24 VDC	3 s fixed	Screw terminals	777 583

Up to PL d of EN ISO 13849-1
PZE X4VP4



Contact expansion module for increasing the number of available contacts

Approvals

	PZE X4VP4
c UL us LISTED	◆
TÜV SÜD	◆
CCC	◆

Unit features

- Positive-guided relay outputs:
- 4 safety contacts (N/O), delay-on de-energisation
- LED indicator for:
  – Switch status channel 1/2
- Plug-in connection terminals (either spring-loaded terminal or screw terminal)
- See order reference for unit types

Unit description

The unit meets the requirements of EN 60947-5-1, EN 60204-1 and VDE 0113-1. The contact expansion module is used to increase the number of instantaneous safety contacts available on a base unit. Base units are all safety relays with feedback loop monitoring.
The category that can be achieved in accordance with EN 954-1 and EN ISO 13849-1 depends on the category of the base unit. The contact expansion module may not exceed this. The delay-on de-energisation safety contacts may only be used up to category 3.

Safety features

The unit meets the following safety requirements:

- The contact expansion module expands an existing circuit. As the output relays are monitored via the base unit's feedback loop, the safety functions on the existing circuit are transferred to the contact expansion module.
- The safety function remains effective in the case of a component failure.
- Earth fault in the feedback loop: Detected, depending on the base unit that is used.
- Earth fault in the input circuit: The output relays de-energise and the safety contacts open.

Block diagram

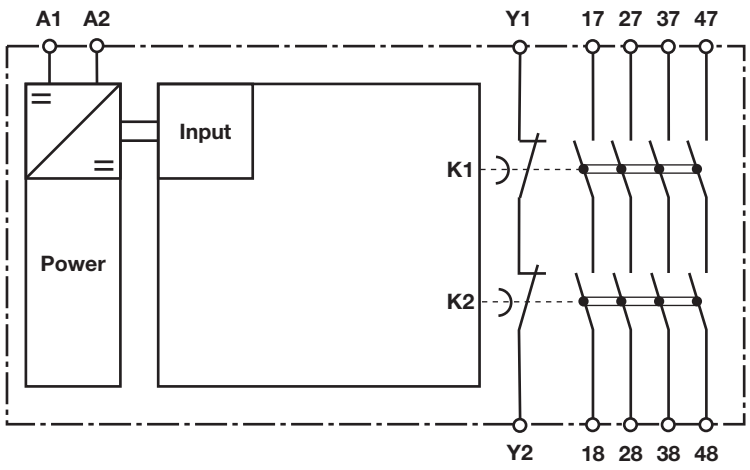

Pilz GmbH & Co. KG, Felix-Wankel-Straße 2, 73760 Ostfildern, Germany
Telephone: +49 711 3409-0, Telefax: +49 711 3409-133, E-Mail: pilz.gmbh@pilz.de

Up to PL d of EN ISO 13849-1
PZE X4VP4

Function description

- Single-channel operation: one input circuit affects both output relays

Timing diagram

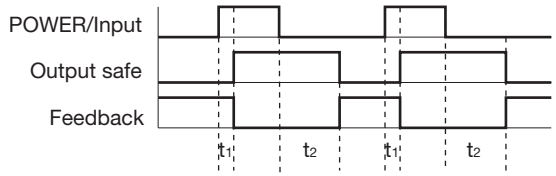

Key

- Power: Supply voltage
- Input: Input circuits A1
- Output safe: Safety contacts 17-18, 27-28, 37-38, 47-48
- Feedback: Feedback loop Y1-Y2
- t_1: Switch-on delay
- t_2: Delay-on de-energisation

Wiring

Please note:

- Information given in the “Technical details” must be followed.
- Outputs 17-18, 27-28, 37-38, 47-48 are delay-on de-energisation safety contacts.
- To prevent contact welding, a fuse should be connected before the output contacts (see technical details).
- Calculation of the max. cable runs I_{max} in the input circuit:

$$I_{max} = \frac{R_{lmax}}{R_l / km}$$

R_{lmax} = max. overall cable resistance (see technical details)
R_l / km = cable resistance/km

- Use copper wire that can withstand 60/75 °C.
- Sufficient fuse protection must be provided on all output contacts with capacitive and inductive loads.

Up to PL d of EN ISO 13849-1
PZE X4VP4

Preparing for operation

- Supply voltage

Supply voltage	AC	DC
		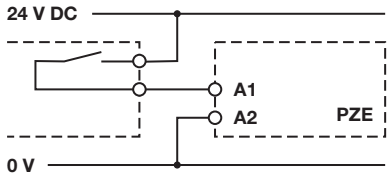

- Input circuit

Input circuit	Single-channel	Dual-channel
Base unit: PNOZ X safety relay Driven via safety contacts	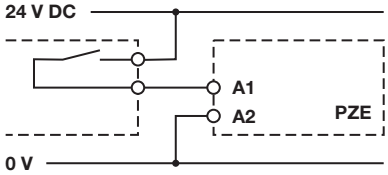	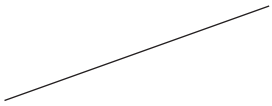
Base unit: PNOZelog safety relay Driven via semiconductor outputs (24 VDC)	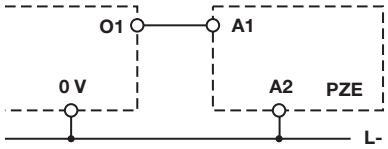	

- Feedback loop

Feedback loop	Base unit: Safety relay PNOZ X	Base unit: Safety relay PNOZelog
Y1, Y2 and Input are inputs on the base unit; they evaluate the feedback loop	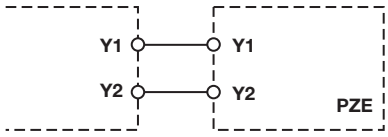	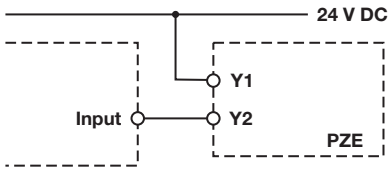

Pilz GmbH & Co. KG, Felix-Wankel-Straße 2, 73760 Ostfildern, Germany
Telephone: +49 711 3409-0, Telefax: +49 711 3409-133, E-Mail: pilz.gmbh@pilz.de

Up to PL d of EN ISO 13849-1
PZE X4VP4

- Setting the delay time

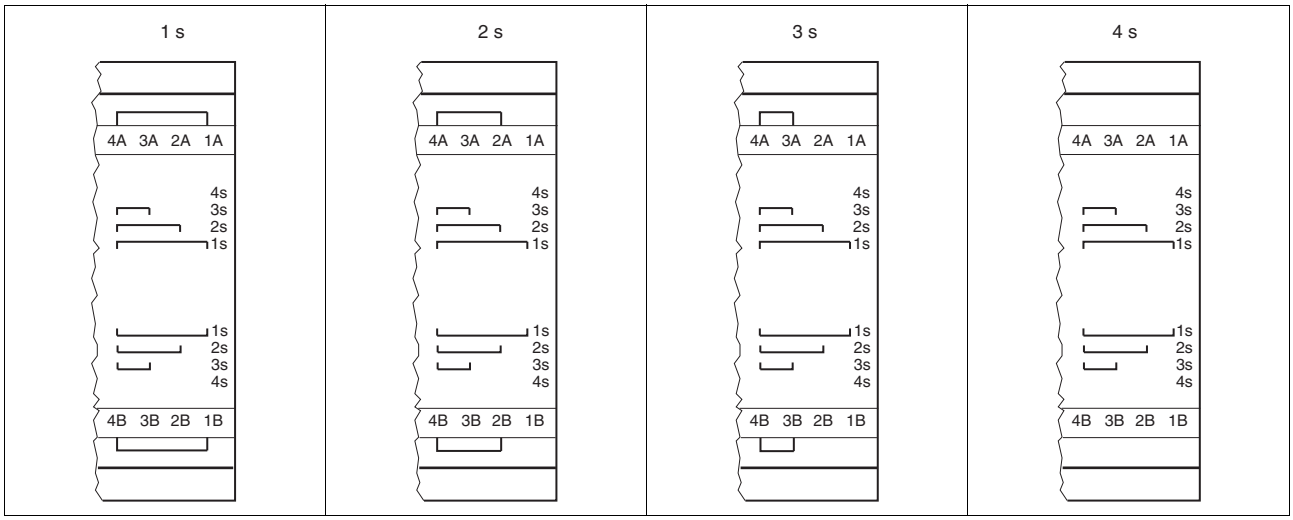

Up to PL d of EN ISO 13849-1
PZE X4VP4

Terminal configuration

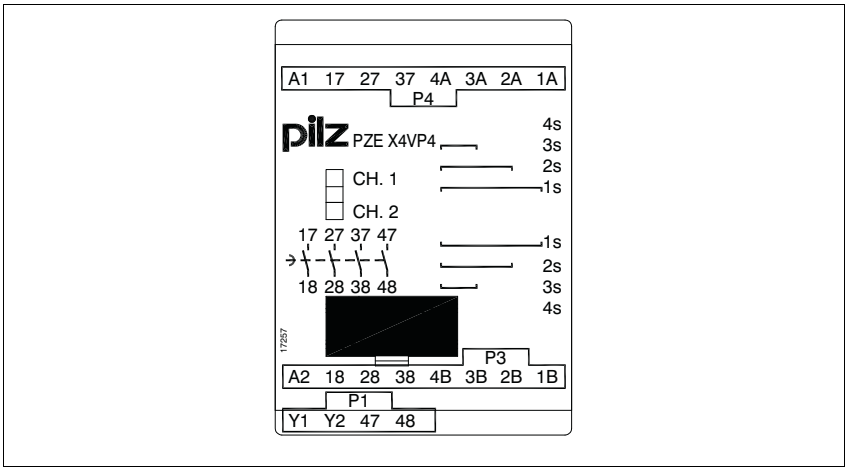

Installation

- The safety relay should be installed in a control cabinet with a protection type of at least IP54.
- Use the notch on the rear of the unit to attach it to a DIN rail.
- Ensure the unit is mounted securely on a vertical DIN rail (35 mm) by using a fixing element (e.g. retaining bracket or an end angle).

Dimensions

* with spring-loaded terminals

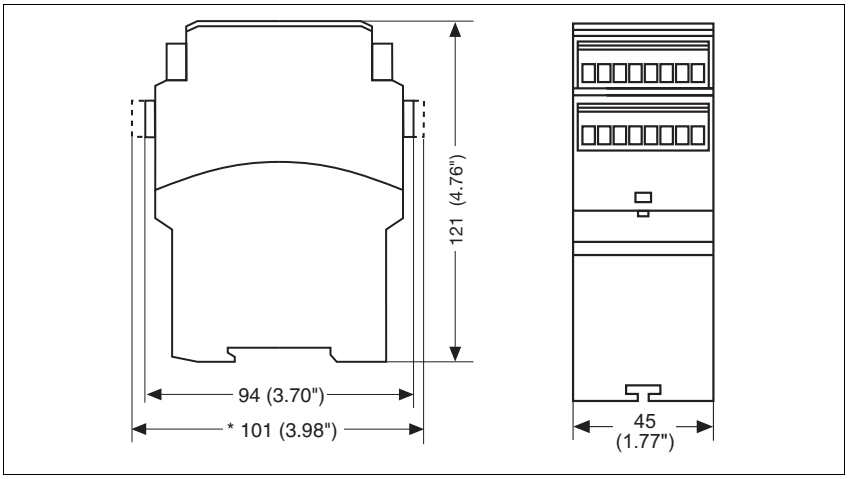

Pilz GmbH & Co. KG, Felix-Wankel-Straße 2, 73760 Ostfildern, Germany
Telephone: +49 711 3409-0, Telefax: +49 711 3409-133, E-Mail: pilz.gmbh@pilz.de

Up to PL d of EN ISO 13849-1
PZE X4VP4

Notice

This data sheet is only intended for use during configuration. Please refer to the operating manual for installation and operation.

Service life graph

The service life graphs indicate the number of cycles from which failures due to wear must be expected. The wear is mainly caused by the electrical load; the mechanical load is negligible.

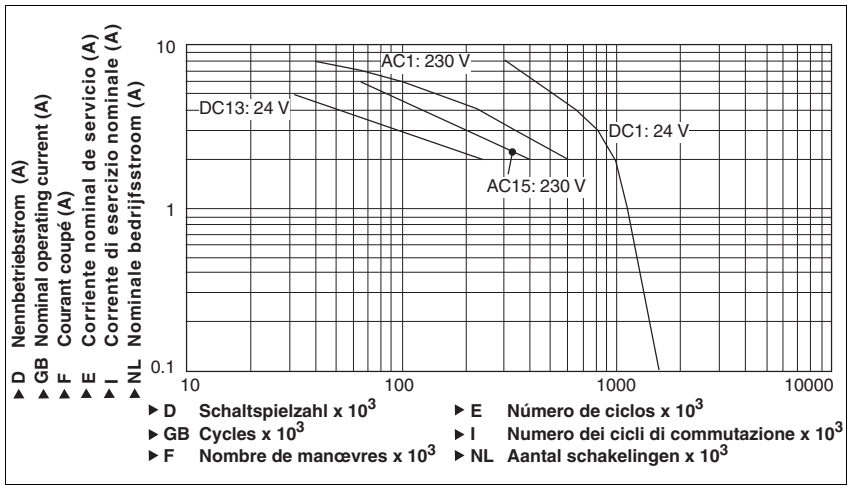

Example
- Inductive load: 2 A
- Utilisation category: AC15
- Contact service life: 400 000 cycles

Provided the application requires fewer than 400 000 cycles, the PFH value (see technical details) can be used in the calculation.

To increase the service life, sufficient spark suppression must be provided on all output contacts. With capacitive loads, any power surges that occur must be noted. With contactors, use freewheel diodes for spark suppression.

Technical details	
Electrical data	
Supply voltage	
Supply voltage U_B DC	**24 V**
Voltage tolerance	**-15 %/+10 %**
Power consumption at U_B DC	**2.5 W**
Residual ripple DC	**20 %**
Voltage and current at	
Input circuit DC: **24.0 V**	**70.0 mA**
Number of output contacts	
Safety contacts (N/O), delayed:	**4**
Utilisation category in accordance with **EN 60947-4-1**	
Safety contacts, delayed: AC1 at **240 V**	I_{min}: **0.01 A** , I_{max}: **5.0 A** P_{max}: **1200 VA**
Safety contacts, delayed: DC1 at **24 V**	I_{min}: **0.01 A** , I_{max}: **5.0 A** P_{max}: **120 W**
Utilisation category in accordance with **EN 60947-5-1**	
Safety contacts, delayed: AC15 at **230 V**	I_{max}: **5.0 A**
Safety contacts, delayed: DC13 at **24 V** (6 cycles/min)	I_{max}: **4.0 A**
Conventional thermal current	**5.0 A**

Up to PL d of EN ISO 13849-1
PZE X4VP4

Electrical data	
Contact material	**AgSnO2 + 0.2 µm Au**
External contact fuse protection (I_K = 1 kA) to **EN 60947-5-1**	
Blow-out fuse, quick	
Safety contacts:	**6 A**
Blow-out fuse, slow	
Safety contacts:	**4 A**
Circuit breaker 24 VAC/DC, characteristic B/C	
Safety contacts:	**4 A**
Max. overall cable resistance R_{lmax} per input circuit	
single-channel at U_B DC	**30 Ohm**
Safety-related characteristic data	
PL in accordance with **EN ISO 13849-1: 2006**	**PL d** (**Cat. 3**)
Category in accordance with **EN 954-1**	**Cat. 3**
SIL CL in accordance with **EN IEC 62061**	**SIL CL 2**
PFH in accordance with **EN IEC 62061**	**2.48E-09**
SIL in accordance with **IEC 61511**	**SIL 2**
PFD in accordance with **IEC 61511**	**1.47E-05**
T_M [year] in accordance with **EN ISO 13849-1: 2006**	**20**
Times	
Switch-on delay	
with automatic reset after power on typ.	**230 ms**
with automatic reset after power on max.	**400 ms**
Delay time t_V: selectable	**1,00 s**; **2,00 s**; **3,00 s**; **4,00 s** No. 777586 **1,00 s**; **2,00 s**; **3,00 s**; **4,00 s** No. 787586
Time accuracy	**-50 %/+50 %**
Supply interruption before de-energisation	**20 ms**
Environmental data	
EMC	**EN 60947-5-1**, **EN 61000-6-2**
Vibration to **EN 60068-2-6**	
Frequency	**10 - 55 Hz**
Amplitude	**0.35 mm**
Climatic suitability	**EN 60068-2-78**
Airgap creepage in accordance with **EN 60947-1**	
Pollution degree	**2**
Overvoltage category	**III**
Rated insulation voltage	**250 V**
Rated impulse withstand voltage	**4.00 kV**
Ambient temperature	**-10 - 55 °C**
Storage temperature	**-40 - 85 °C**
Protection type	
Mounting (e.g. cabinet)	**IP54**
Housing	**IP40**
Terminals	**IP20**
Mechanical data	
Housing material	
Housing	**PPO UL 94 V0**
Front	**ABS UL 94 V0**
Cross section of external conductors with screw terminals	
1 core flexible	**0.25 - 2.50 mm² , 24 - 12 AWG** No. 777586
2 core, same cross section, flexible:	
with crimp connectors, without insulating sleeve	**0.25 - 1.00 mm² , 24 - 16 AWG** No. 777586
without crimp connectors or with TWIN crimp connectors	**0.20 - 1.50 mm² , 24 - 16 AWG** No. 777586
Torque setting with screw terminals	**0.50 Nm** No. 777586
Cross section of external conductors with spring-loaded terminals: Flexible with/without crimp connectors	**0.20 - 1.50 mm² , 24 - 16 AWG** No. 787586
Spring-loaded terminals: Terminal points per connection	**2** No. 787586
Stripping length	**8 mm** No. 787586

Pilz GmbH & Co. KG, Felix-Wankel-Straße 2, 73760 Ostfildern, Germany
Telephone: +49 711 3409-0, Telefax: +49 711 3409-133, E-Mail: pilz.gmbh@pilz.de

Up to PL d of EN ISO 13849-1
PZE X4VP4

Mechanical data	
Dimensions	
Height	**101.0 mm** No. 787586 **94.0 mm** No. 777586
Width	**45.0 mm**
Depth	**121.0 mm**
Weight	**300 g** No. 787586 **305 g** No. 777586

No. stands for order number.

It is essential to consider the relay's service life graphs. The relay outputs' safety-related characteristic data is only valid if the values in the service life graphs are met.

The PFH value depends on the switching frequency and the load on the relay output.
If the service life graphs are not accessible, the stated PFH value can be used irrespective of the switching frequency and the load, as the PFH value already considers the relay's B10d value as well as the failure rates of the other components.

All the units used within a safety function must be considered when calculating the safety characteristic data.

INFORMATION
A safety function's SIL/PL values are **not** identical to the SIL/PL values of the units that are used and may be different. We recommend that you use the PAScal software tool to calculate the safety function's SIL/PL values.

The standards current on **2009-03** apply.

Order reference

Type	Features			Terminals	Order no.
PZE X4VP4 C		24 VDC	4 s selectable	Spring-loaded terminals	787 586
PZE X4VP4		24 VDC	4 s selectable	Screw terminals	777 586

Up to PL d of EN ISO 13849-1
PZE X4VP8



Contact expansion module for increasing the number of available contacts

Approvals

	PZE X4VP8
c UL us LISTED	◆
TÜV SÜD	◆
CCC	◆

Unit features

- Positive-guided relay outputs:
  - 4 safety contacts (N/O), delay-on de-energisation
- LED indicator for:
  - Switch status channel 1/2
- Plug-in connection terminals (either spring-loaded terminal or screw terminal)
- See order reference for unit types

Unit description

The unit meets the requirements of EN 60947-5-1, EN 60204-1 and VDE 0113-1. The contact expansion module is used to increase the number of instantaneous safety contacts available on a base unit. Base units are all safety relays with feedback loop monitoring.
The category that can be achieved in accordance with EN 954-1 and EN ISO 13849-1 depends on the category of the base unit. The contact expansion module may not exceed this. The delay-on de-energisation safety contacts may only be used up to category 3.

Safety features

The unit meets the following safety requirements:

- The contact expansion module expands an existing circuit. As the output relays are monitored via the base unit's feedback loop, the safety functions on the existing circuit are transferred to the contact expansion module.
- The safety function remains effective in the case of a component failure.
- Earth fault in the feedback loop: Detected, depending on the base unit that is used.
- Earth fault in the input circuit: The output relays de-energise and the safety contacts open.

Block diagram

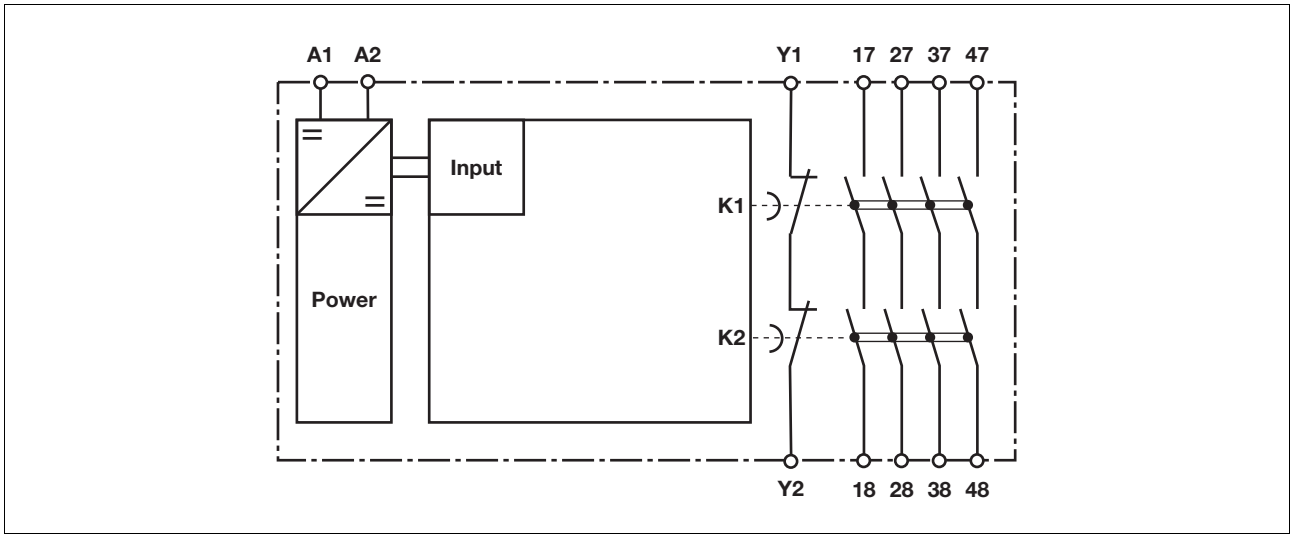

Pilz GmbH & Co. KG, Felix-Wankel-Straße 2, 73760 Ostfildern, Germany
Telephone: +49 711 3409-0, Telefax: +49 711 3409-133, E-Mail: pilz.gmbh@pilz.de

Up to PL d of EN ISO 13849-1
PZE X4VP8

Function description

- Single-channel operation: one input circuit affects both output relays

Timing diagram

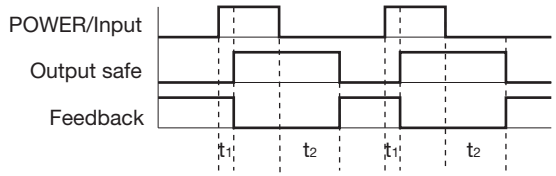

Key

- Power: Supply voltage
- Input: Input circuits A1
- Output safe: Safety contacts 17-18, 27-28, 37-38, 47-48
- Feedback: Feedback loop Y1-Y2
- t_1: Switch-on delay
- t_2: Delay-on de-energisation

Wiring

Please note:

- Information given in the “Technical details” must be followed.
- Outputs 17-18, 27-28, 37-38, 47-48 are delay-on de-energisation safety contacts.
- To prevent contact welding, a fuse should be connected before the output contacts (see technical details).
- Calculation of the max. cable runs I_{max} in the input circuit:

$$I_{max} = \frac{R_{lmax}}{R_l / km}$$

R_{lmax} = max. overall cable resistance (see technical details)
R_l / km = cable resistance/km

- Use copper wire that can withstand 60/75 °C.
- Sufficient fuse protection must be provided on all output contacts with capacitive and inductive loads.

Up to PL d of EN ISO 13849-1
PZE X4VP8

Preparing for operation

- Supply voltage

Supply voltage	AC	DC
		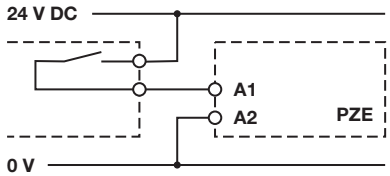

- Input circuit

Input circuit	Single-channel	Dual-channel
Base unit: PNOZ X safety relay Driven via safety contacts	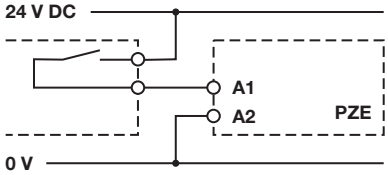	
Base unit: PNOZelog safety relay Driven via semiconductor outputs (24 VDC)	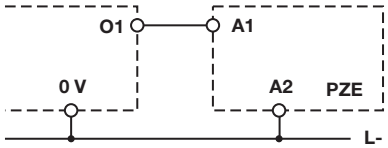	

- Feedback loop

Feedback loop	Automatic reset	Monitored reset
Y1, Y2 and Input are inputs on the base unit; they evaluate the feedback loop	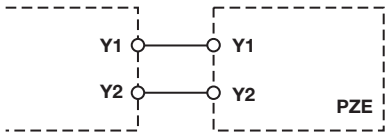	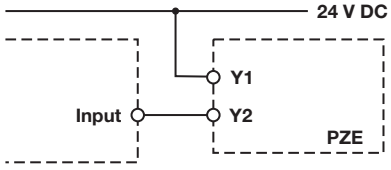

Pilz GmbH & Co. KG, Felix-Wankel-Straße 2, 73760 Ostfildern, Germany
Telephone: +49 711 3409-0, Telefax: +49 711 3409-133, E-Mail: pilz.gmbh@pilz.de

Up to PL d of EN ISO 13849-1
PZE X4VP8

- Setting the delay time

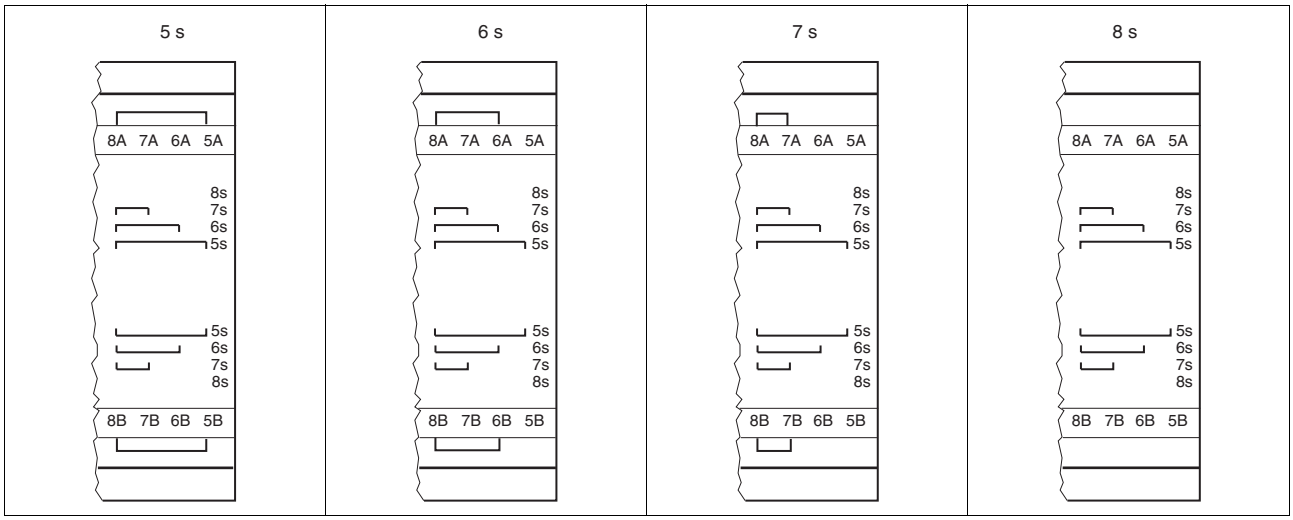

Up to PL d of EN ISO 13849-1
PZE X4VP8

Terminal configuration

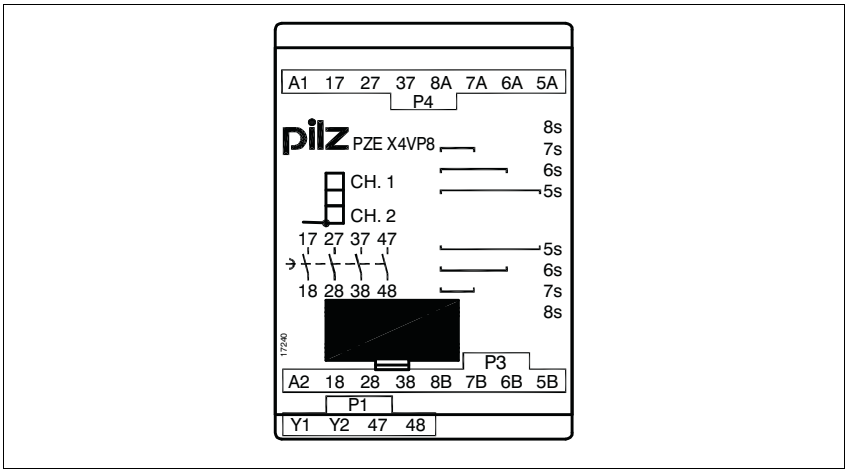

Installation

- The safety relay should be installed in a control cabinet with a protection type of at least IP54.
- Use the notch on the rear of the unit to attach it to a DIN rail.
- Ensure the unit is mounted securely on a vertical DIN rail (35 mm) by using a fixing element (e.g. retaining bracket or an end angle).

Dimensions

* with spring-loaded terminals

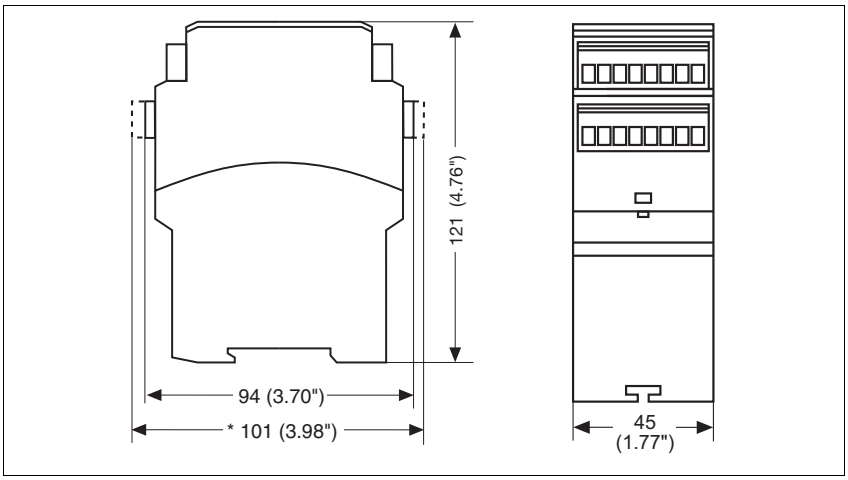

Pilz GmbH & Co. KG, Felix-Wankel-Straße 2, 73760 Ostfildern, Germany
Telephone: +49 711 3409-0, Telefax: +49 711 3409-133, E-Mail: pilz.gmbh@pilz.de

Up to PL d of EN ISO 13849-1
PZE X4VP8

Notice

This data sheet is only intended for use during configuration. Please refer to the operating manual for installation and operation.

Service life graph

The service life graphs indicate the number of cycles from which failures due to wear must be expected. The wear is mainly caused by the electrical load; the mechanical load is negligible.

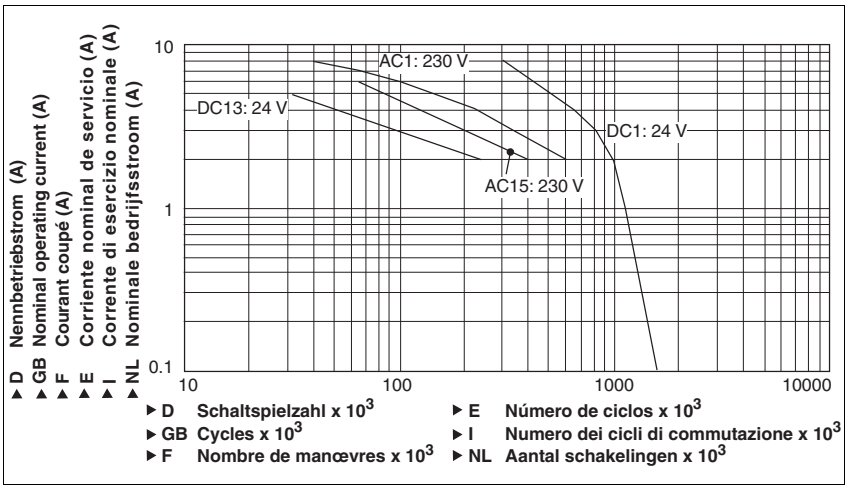

Example
- Inductive load: 2 A
- Utilisation category: AC15
- Contact service life: 400 000 cycles

Provided the application requires fewer than 400 000 cycles, the PFH value (see technical details) can be used in the calculation.

To increase the service life, sufficient spark suppression must be provided on all output contacts. With capacitive loads, any power surges that occur must be noted. With contactors, use freewheel diodes for spark suppression.

Technical details

Electrical data	
Supply voltage	
Supply voltage U_B DC	**24 V**
Voltage tolerance	**-15 %/+10 %**
Power consumption at U_B DC	**2.5 W**
Residual ripple DC	**20 %**
Voltage and current at	
Input circuit DC: **24.0 V**	**70.0 mA**
Number of output contacts	
Safety contacts (N/O), delayed:	**4**
Utilisation category in accordance with **EN 60947-4-1**	
Safety contacts, delayed: AC1 at **240 V**	I_{min}: **0.01 A** , I_{max}: **5.0 A** P_{max}: **1200 VA**
Safety contacts, delayed: DC1 at **24 V**	I_{min}: **0.01 A** , I_{max}: **5.0 A** P_{max}: **120 W**
Utilisation category in accordance with **EN 60947-5-1**	
Safety contacts, delayed: AC15 at **230 V**	I_{max}: **5.0 A**
Safety contacts, delayed: DC13 at **24 V** (6 cycles/min)	I_{max}: **4.0 A**
Conventional thermal current	**5.0 A**

Up to PL d of EN ISO 13849-1
PZE X4VP8

Electrical data	
Contact material	**AgSnO2 + 0.2 µm Au**
External contact fuse protection (I_K = 1 kA) to **EN 60947-5-1**	
Blow-out fuse, quick	
Safety contacts:	**6 A**
Blow-out fuse, slow	
Safety contacts:	**4 A**
Circuit breaker 24 VAC/DC, characteristic B/C	
Safety contacts:	**4 A**
Max. overall cable resistance R_{lmax} per input circuit	
single-channel at U_B DC	**30 Ohm**
Safety-related characteristic data	
PL in accordance with **EN ISO 13849-1: 2006**	**PL d** (**Cat. 3**)
Category in accordance with **EN 954-1**	**Cat. 3**
SIL CL in accordance with **EN IEC 62061**	**SIL CL 2**
PFH in accordance with **EN IEC 62061**	**2.48E-09**
SIL in accordance with **IEC 61511**	**SIL 2**
PFD in accordance with **IEC 61511**	**1.47E-05**
T_M [year] in accordance with **EN ISO 13849-1: 2006**	**20**
Times	
Switch-on delay	
with automatic reset after power on typ.	**320 ms**
with automatic reset after power on max.	**500 ms**
Delay time t_V: selectable	**5,00 s**; **6,00 s**; **7,00 s**; **8,00 s** No. 777584 **5,00 s**; **6,00 s**; **7,00 s**; **8,00 s** No. 787584
Time accuracy	**-50 %/+50 %**
Supply interruption before de-energisation	**20 ms**
Environmental data	
EMC	**EN 60947-5-1**, **EN 61000-6-2**
Vibration to **EN 60068-2-6**	
Frequency	**10 - 55 Hz**
Amplitude	**0.35 mm**
Climatic suitability	**EN 60068-2-78**
Airgap creepage in accordance with **EN 60947-1**	
Pollution degree	**2**
Overvoltage category	**III**
Rated insulation voltage	**250 V**
Rated impulse withstand voltage	**4.00 kV**
Ambient temperature	**-10 - 55 °C**
Storage temperature	**-40 - 85 °C**
Protection type	
Mounting (e.g. cabinet)	**IP54**
Housing	**IP40**
Terminals	**IP20**
Mechanical data	
Housing material	
Housing	**PPO UL 94 V0**
Front	**ABS UL 94 V0**
Cross section of external conductors with screw terminals	
1 core flexible	**0.25 - 2.50 mm² , 24 - 12 AWG** No. 777584
2 core, same cross section, flexible:	
with crimp connectors, without insulating sleeve	**0.25 - 1.00 mm² , 24 - 16 AWG** No. 777584
without crimp connectors or with TWIN crimp connectors	**0.20 - 1.50 mm² , 24 - 16 AWG** No. 777584
Torque setting with screw terminals	**0.50 Nm** No. 777584
Cross section of external conductors with spring-loaded terminals: Flexible with/without crimp connectors	**0.20 - 1.50 mm² , 24 - 16 AWG** No. 787584
Spring-loaded terminals: Terminal points per connection	**2** No. 787584
Stripping length	**8 mm** No. 787584

Pilz GmbH & Co. KG, Felix-Wankel-Straße 2, 73760 Ostfildern, Germany
Telephone: +49 711 3409-0, Telefax: +49 711 3409-133, E-Mail: pilz.gmbh@pilz.de

Up to PL d of EN ISO 13849-1
PZE X4VP8

Mechanical data	
Dimensions	
Height	**101.0 mm** No. 787584 **94.0 mm** No. 777584
Width	**45.0 mm**
Depth	**121.0 mm**
Weight	**325 g** No. 787584 **330 g** No. 777584

No. stands for order number.

It is essential to consider the relay's service life graphs. The relay outputs' safety-related characteristic data is only valid if the values in the service life graphs are met.

The PFH value depends on the switching frequency and the load on the relay output.
If the service life graphs are not accessible, the stated PFH value can be used irrespective of the switching frequency and the load, as the PFH value already considers the relay's B10d value as well as the failure rates of the other components.

All the units used within a safety function must be considered when calculating the safety characteristic data.

INFORMATION
A safety function's SIL/PL values are **not** identical to the SIL/PL values of the units that are used and may be different. We recommend that you use the PAScal software tool to calculate the safety function's SIL/PL values.

The standards current on **2009-03** apply.

Order reference

Type	Features			Terminals	Order no.
PZE X4VP8 C		24 VDC	8 s selectable	Spring-loaded terminals	787 584
PZE X4VP8		24 VDC	8 s selectable	Screw terminals	777 584

Up to PL e of EN ISO 13849-1
PZE X5P



Contact expansion module for increasing the number of available contacts

Approvals

	PZE X5P
cULus LISTED	◆
TÜV	◆
CCC	◆

Unit features

- Positive-guided relay outputs:
  - 5 safety contacts (N/O), instantaneous
- 2 semiconductor outputs
- LED indicator for:
  - Switch status channel 1/2
  - Supply voltage
- Semiconductor outputs signal:
  - Switch status channel 1/2
  - Supply voltage is present
- Plug-in connection terminals (either spring-loaded terminal or screw terminal)
- See order reference for unit types

Unit description

The unit meets the requirements of EN 60947-5-1, EN 60204-1 and VDE 0113-1. The contact expansion module is used to increase the number of instantaneous safety contacts available on a base unit. Base units are all safety relays with feedback loop monitoring.
The category that can be achieved in accordance with EN 954-1 and EN ISO 13849-1 depends on the category of the base unit. The contact expansion module may not exceed this.

Safety features

The unit meets the following safety requirements:

- The contact expansion module expands an existing circuit. As the output relays are monitored via the base unit's feedback loop, the safety functions on the existing circuit are transferred to the contact expansion module.
- The safety function remains effective in the case of a component failure.
- Earth fault in the feedback loop: Detected, depending on the base unit that is used.
- Earth fault in the input circuit: The output relays de-energise and the safety contacts open.

Block diagram

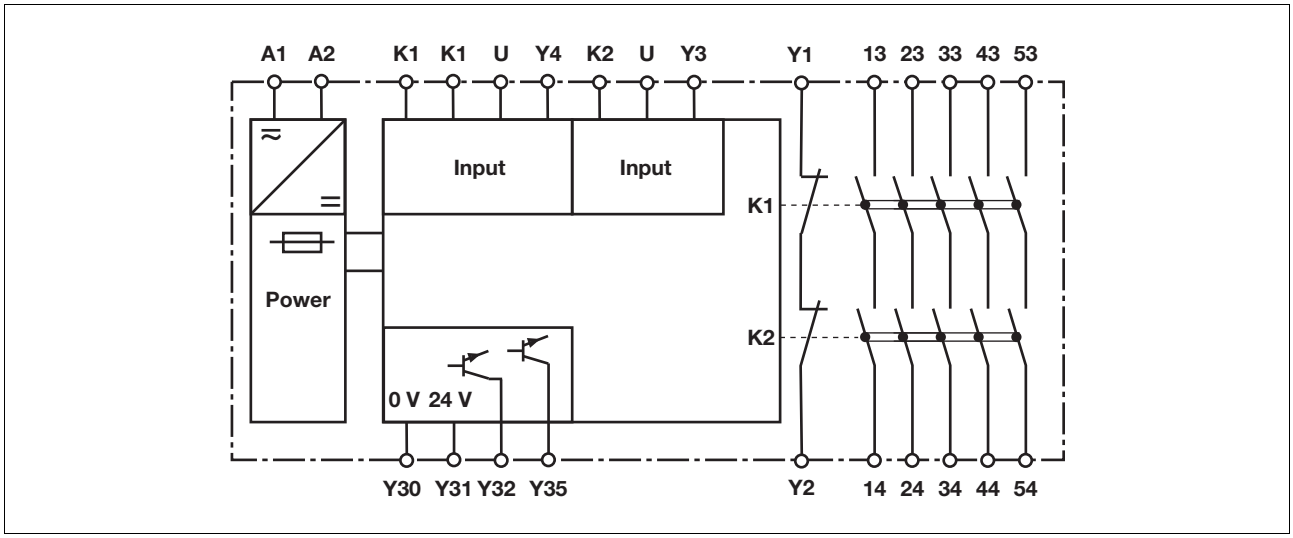

Pilz GmbH & Co. KG, Felix-Wankel-Straße 2, 73760 Ostfildern, Germany
Telephone: +49 711 3409-0, Telefax: +49 711 3409-133, E-Mail: pilz.gmbh@pilz.de

Up to PL e of EN ISO 13849-1
PZE X5P

Function description

- Single-channel operation: one input circuit affects both output relays
- Dual-channel operation:
  - two redundant input circuits affect one output relay
  - Detection of shorts across contacts is also possible

Timing diagram

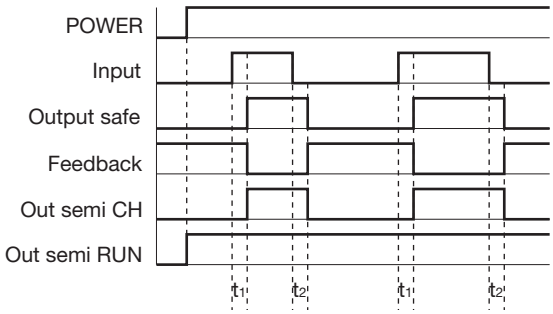

Key

- Power: Supply voltage
- Input: Input circuits K1, K2
- Output safe: Safety contacts 13-14, 23-24, 33-34, 43-44, 53-54
- Out semi CH: Semiconductor output switch status channel 1/2
- Out semi RUN: Semiconductor output supply voltage
- Feedback: Feedback loop Y1-Y2
- t_1: Switch-on delay
- t_2: Delay-on de-energisation

Wiring

Please note:

- Information given in the “Technical details” must be followed.
- Outputs 13-14, 23-24, 33-34, 43-44, 53-54 are safety contacts.
- To prevent contact welding, a fuse should be connected before the output contacts (see technical details).
- Calculation of the max. cable runs I_{max} in the input circuit:

$$I_{max} = \frac{R_{lmax}}{R_l / km}$$

R_{lmax} = max. overall cable resistance (see technical details)
R_l /km = cable resistance/km

- Use copper wire that can withstand 60/75 °C.
- Sufficient fuse protection must be provided on all output contacts with capacitive and inductive loads.

Pilz GmbH & Co. KG, Felix-Wankel-Straße 2, 73760 Ostfildern, Germany
Telephone: +49 711 3409-0, Telefax: +49 711 3409-133, E-Mail: pilz.gmbh@pilz.de

Up to PL e of EN ISO 13849-1
PZE X5P

Preparing for operation

- Supply voltage

Supply voltage	AC	DC
		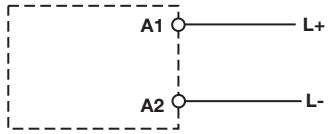

- Input circuit

Input circuit	Single-channel	Dual-channel
E-STOP **without** detection of shorts across contacts	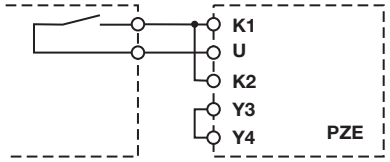	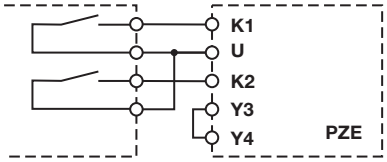
E-STOP **with** detection of shorts across contacts		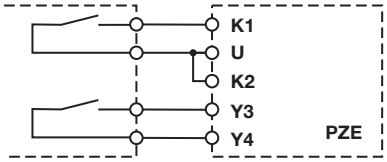

- Feedback circuit

Y1 and Y2 are feedback loop inputs on the base unit	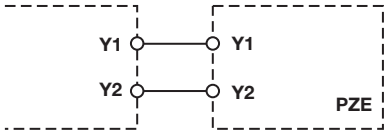

- Semiconductor output

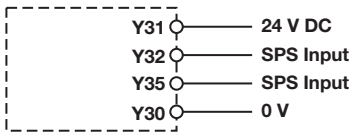

Pilz GmbH & Co. KG, Felix-Wankel-Straße 2, 73760 Ostfildern, Germany
Telephone: +49 711 3409-0, Telefax: +49 711 3409-133, E-Mail: pilz.gmbh@pilz.de

Up to PL e of EN ISO 13849-1
PZE X5P

Terminal configuration

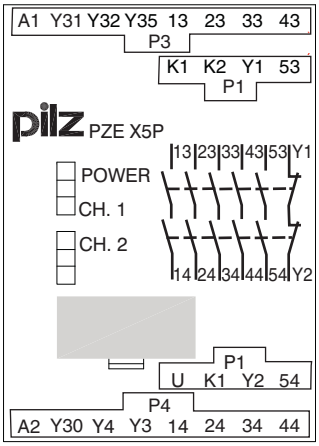

Installation

- The safety relay should be installed in a control cabinet with a protection type of at least IP54.
- Use the notch on the rear of the unit to attach it to a DIN rail.
- Ensure the unit is mounted securely on a vertical DIN rail (35 mm) by using a fixing element (e.g. retaining bracket or an end angle).

Dimensions in mm (")

* with spring-loaded terminals

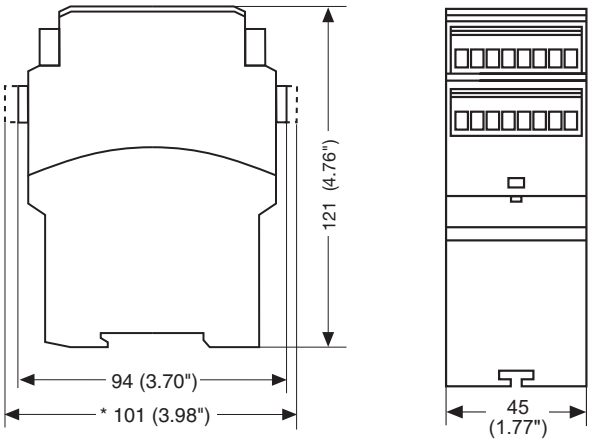

Up to PL e of EN ISO 13849-1
PZE X5P

Notice

This data sheet is only intended for use during configuration. Please refer to the operating manual for installation and operation.

Service life graph

The service life graphs indicate the number of cycles from which failures due to wear must be expected. The wear is mainly caused by the electrical load; the mechanical load is negligible.

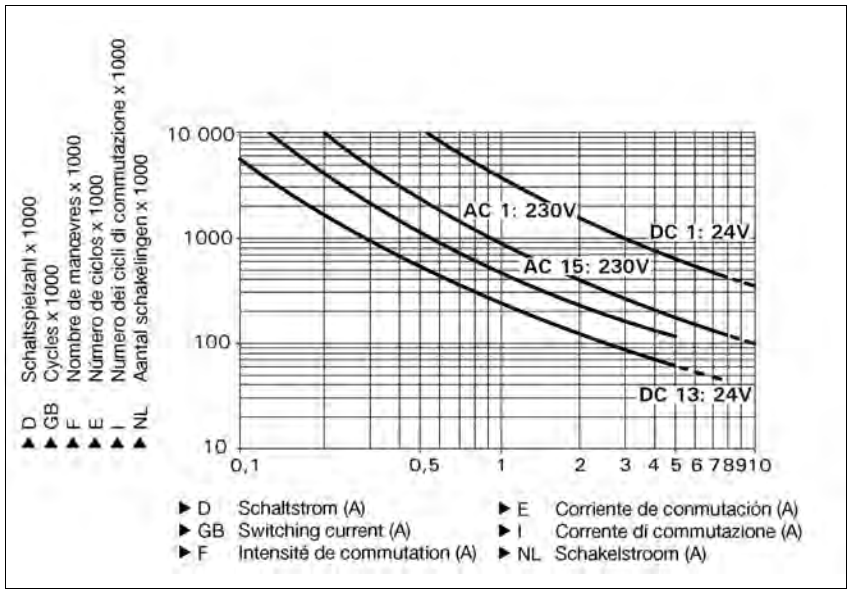

Example
- Inductive load: 0,2 A
- Utilisation category: AC15
- Contact service life: 4,000,000 cycles

Provided the application requires fewer than 4,000,000 cycles, the PFH value (see technical details) can be used in the calculation.

To increase the service life, sufficient spark suppression must be provided on all output contacts. With capacitive loads, any power surges that occur must be noted. With contactors, use freewheel diodes for spark suppression.

Technical details	

Electrical data	
Supply voltage	
Supply voltage U_B DC	**24 V**
Voltage tolerance	**-15 %/+10 %**
Power consumption at U_B DC	**3.5 W**
Residual ripple DC	**20 %**
Voltage and current at	
Input circuit DC: **24.0 V**	**40.0 mA**
Number of output contacts	
Safety contacts (S) instantaneous:	**5**

Pilz GmbH & Co. KG, Felix-Wankel-Straße 2, 73760 Ostfildern, Germany
Telephone: +49 711 3409-0, Telefax: +49 711 3409-133, E-Mail: pilz.gmbh@pilz.de

Up to PL e of EN ISO 13849-1
PZE X5P

Electrical data	
Utilisation category in accordance with **EN 60947-4-1**	
Safety contacts: AC1 at **240 V**	I_{min}: **0.01 A** , I_{max}: **8.0 A** P_{max}: **2000 VA**
Safety contacts: DC1 at **24 V**	I_{min}: **0.01 A** , I_{max}: **8.0 A** P_{max}: **200 W**
Utilisation category in accordance with **EN 60947-5-1**	
Safety contacts: AC15 at **230 V**	I_{max}: **5.0 A**
Safety contacts: DC13 at **24 V** (6 cycles/min)	I_{max}: **7.0 A**
Contact material	**AgSnO2 + 0.2 µm Au**
External contact fuse protection (I_K = 1 kA) to **EN 60947-5-1**	
Blow-out fuse, quick	
Safety contacts:	**10 A**
Blow-out fuse, slow	
Safety contacts:	**6 A**
Circuit breaker 24 VAC/DC, characteristic B/C	
Safety contacts:	**6 A**
Semiconductor outputs (short circuit proof)	**24.0 V** DC, **20 mA**
External supply voltage	**24.0 V** DC
Voltage tolerance	**-20 %/+20 %**
Max. overall cable resistance R_{lmax} per input circuit	
single-channel at U_B DC	**120 Ohm**
dual-channel without detect. of shorts across contacts at U_B DC	**240 Ohm**
dual-channel with detect. of shorts across contacts at U_B DC	**4 Ohm**
Safety-related characteristic data	
PL in accordance with **EN ISO 13849-1: 2006**	**PL e** (**Cat. 4**)
Category in accordance with **EN 954-1**	**Cat. 4**
SIL CL in accordance with **EN IEC 62061**	**SIL CL 3**
PFH in accordance with **EN IEC 62061**	**2.31E-09**
SIL in accordance with **IEC 61511**	**SIL 3**
PFD in accordance with **IEC 61511**	**2.03E-06**
T_M [year] in accordance with **EN ISO 13849-1: 2006**	**20**
Times	
Switch-on delay	
with automatic reset typ.	**16 ms**
with automatic reset max.	**30 ms**
with automatic reset after power on typ.	**15 ms**
with automatic reset after power on max.	**20 ms**
Delay-on de-energisation	
with E-STOP typ.	**13 ms**
with E-STOP max.	**30 ms**
with power failure typ.	**110 ms**
with power failure max.	**150 ms**
Supply interruption before de-energisation	**20 ms**
Supply interruption before de-energisation in the input circuit	**8.0 ms**
Environmental data	
EMC	**EN 60947-5-1**, **EN 61000-6-2**
Vibration to **EN 60068-2-6**	
Frequency	**10 - 55 Hz**
Amplitude	**0.35 mm**
Climatic suitability	**EN 60068-2-78**
Airgap creepage in accordance with **EN 60947-1**	
Pollution degree	**2**
Overvoltage category	**III**
Rated insulation voltage	**250 V**
Rated impulse withstand voltage	**4.00 kV**
Ambient temperature	**-10 - 55 °C**

Up to PL e of EN ISO 13849-1
PZE X5P

Environmental data	
Storage temperature	**-40 - 85 °C**
Protection type	
Mounting (e.g. cabinet)	**IP54**
Housing	**IP40**
Terminals	**IP20**
Mechanical data	
Housing material	
Housing	**PPO UL 94 V0**
Front	**ABS UL 94 V0**
Cross section of external conductors with screw terminals	
1 core flexible	**0.25 - 2.50 mm² , 24 - 12 AWG** No. 777150
2 core, same cross section, flexible:	
with crimp connectors, without insulating sleeve	**0.25 - 1.00 mm² , 24 - 16 AWG** No. 777150
without crimp connectors or with TWIN crimp connectors	**0.20 - 1.50 mm² , 24 - 16 AWG** No. 777150
Torque setting with screw terminals	**0.50 Nm** No. 777150
Cross section of external conductors with spring-loaded terminals: Flexible with/without crimp connectors	**0.20 - 1.50 mm² , 24 - 16 AWG** No. 787150
Spring-loaded terminals: Terminal points per connection	**2** No. 787150
Stripping length	**8 mm** No. 787150
Dimensions	
Height	**101.0 mm** No. 787150 **94.0 mm** No. 777150
Width	**45.0 mm**
Depth	**121.0 mm**
Weight	**255 g** No. 787150 **260 g** No. 777150

No. stands for order number.

It is essential to consider the relay's service life graphs. The relay outputs' safety-related characteristic data is only valid if the values in the service life graphs are met.

The PFH value depends on the switching frequency and the load on the relay output.
If the service life graphs are not accessible, the stated PFH value can be used irrespective of the switching frequency and the load, as the PFH value already considers the relay's B10d value as well as the failure rates of the other components.

All the units used within a safety function must be considered when calculating the safety characteristic data.

INFORMATION
A safety function's SIL/PL values are **not** identical to the SIL/PL values of the units that are used and may be different. We recommend that you use the PAScal software tool to calculate the safety function's SIL/PL values.

The standards current on **2007-09** apply.

Pilz GmbH & Co. KG, Felix-Wankel-Straße 2, 73760 Ostfildern, Germany
Telephone: +49 711 3409-0, Telefax: +49 711 3409-133, E-Mail: pilz.gmbh@pilz.de

Up to PL e of EN ISO 13849-1
PZE X5P

Conventional thermal current while loading several contacts

Number of contacts	I_{th} per contact at U_B DC
1	**8.00 A**
2	**8.00 A**
3	**6.50 A**
4	**5.60 A**
5	**5.00 A**

Order reference

Type	Features		Terminals	Order no.
PZE X5P C		24 VDC	Spring-loaded terminals	787 150
PZE X5P		24 VDC	Screw terminals	777 150

Up to PL e of EN ISO 13849-1
PZE 9P

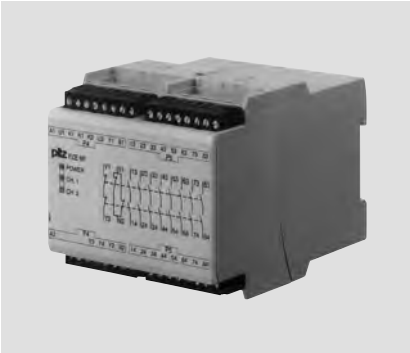

Contact expansion module for increasing the number of available contacts

Approvals

	PZE 9P
cULus LISTED	◆
TÜV SÜD	◆
CCC	◆

Unit features

- Positive-guided relay outputs:
  - 8 safety contacts (N/O), instantaneous
  - 1 auxiliary contact (N/C), instantaneous
- Safe separation of safety contacts 23-24 ... 83-84 from input circuits K1-U2, K2-U2, Y3-Y4, feedback loop Y1-Y2 and auxiliary contact 91-92.
- LED indicator for:
  - Switch status channel 1/2
  - Supply voltage
- Plug-in connection terminals (either spring-loaded terminal or screw terminal)
- See order reference for unit types

Unit description

The unit meets the requirements of EN 60204-1 and IEC 60204-1. The contact expansion module is used to increase the number of contacts available on a base unit. Base units are all

- Safety relays with feedback loop
- Programmable safety systems with feedback loop

The category that can be achieved in accordance with EN 954-1 and EN ISO 13849-1 depends on the category of the base unit. The contact expansion module may not exceed this.

Safety features

The unit meets the following safety requirements:

- The contact expansion module expands an existing circuit. As the output relays are monitored via the base unit's feedback loop, the safety functions on the existing circuit are transferred to the contact expansion module.
- The safety function remains effective in the case of a component failure.
- Earth fault in the feedback loop: Detected, depending on the base unit that is used.
- Earth fault in the input circuit: The output relays de-energise and the safety contacts open.

Block diagram

* Galvanic isolation in accordance with EN 60947-1, 6 kV (see unit features)

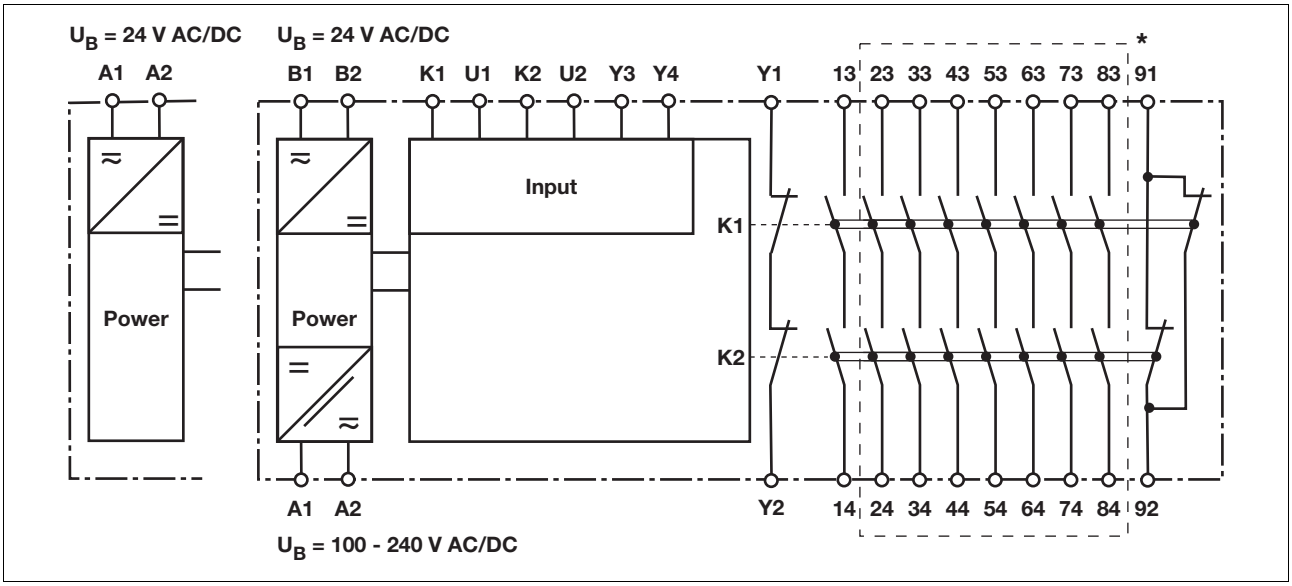

Pilz GmbH & Co. KG, Felix-Wankel-Straße 2, 73760 Ostfildern, Germany
Telephone: +49 711 3409-0, Telefax: +49 711 3409-133, E-Mail: pilz.gmbh@pilz.de

1002015-EN-02-2011-11

Up to PL e of EN ISO 13849-1
PZE 9P

Function description

- Single-channel operation: one input circuit affects both output relays
- Dual-channel operation:
  - two redundant input circuits affect one output relay
  - Detection of shorts across contacts is also possible

Timing diagram

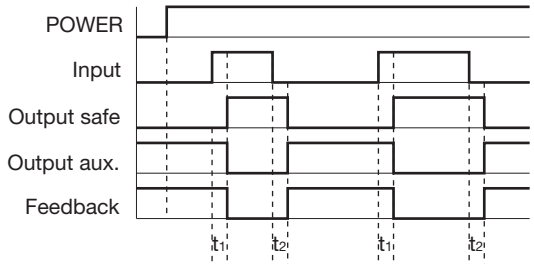

Key

- Power: Supply voltage
- Input: Input circuits K1-U1, K2-U2, Y3-Y4
- Output safe: Safety contacts 13-14, 23-24, 33-34, 43-44, 53-54, 63-64, 73-74, 83-84
- Output aux: Auxiliary contacts 91-92
- Feedback: Feedback loop Y1-Y2
- t_1: Switch-on delay
- t_2: Delay-on de-energisation

Wiring

Please note:

- Information given in the “Technical details” must be followed.
- Outputs 13-14, 23-24, 33-34, 43-44, 53-54, 63-64, 73-74, 83-84 are safety contacts, output 91-92 is an auxiliary contact (e.g. for display).
- To prevent contact welding, a fuse should be connected before the output contacts (see technical details).
- Calculation of the max. cable runs l_{max} in the input circuit:

$$l_{max} = \frac{R_{lmax}}{R_l / km}$$

R_{lmax} = max. overall cable resistance (see technical details)
R_l /km = cable resistance/km

- Use copper wire that can withstand 60/75 °C.
- Sufficient fuse protection must be provided on all output contacts with capacitive and inductive loads.

Up to PL e of EN ISO 13849-1
PZE 9P

Preparing for operation

- Supply voltage

Supply voltage	AC/DC	AC/DC
	Order no.: 777148, 787148 U_B = 100 - 240 V 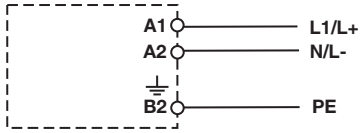	Order no. 777148, 787148 U_B = 24 V 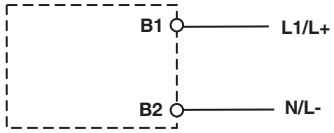
		Order no. 777140, 787140 U_B = 24 V 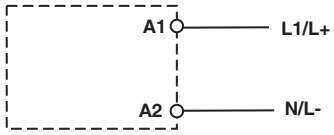

- Input circuit

Input circuit	Single-channel	Dual-channel
without detection of shorts across contacts	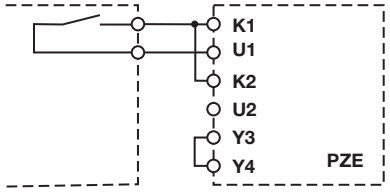	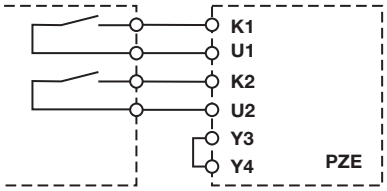
with detection of shorts across contacts		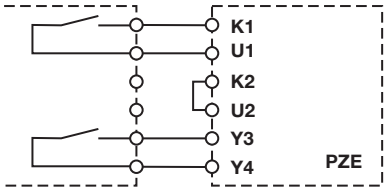

- Feedback loop

Y1 and Y2 are feedback loop inputs on the base unit	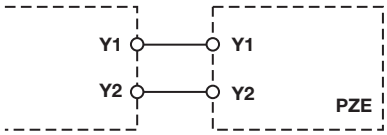

Pilz GmbH & Co. KG, Felix-Wankel-Straße 2, 73760 Ostfildern, Germany
Telephone: +49 711 3409-0, Telefax: +49 711 3409-133, E-Mail: pilz.gmbh@pilz.de

Up to PL e of EN ISO 13849-1
PZE 9P

Terminal configuration

U_B = 24 VAC/DC

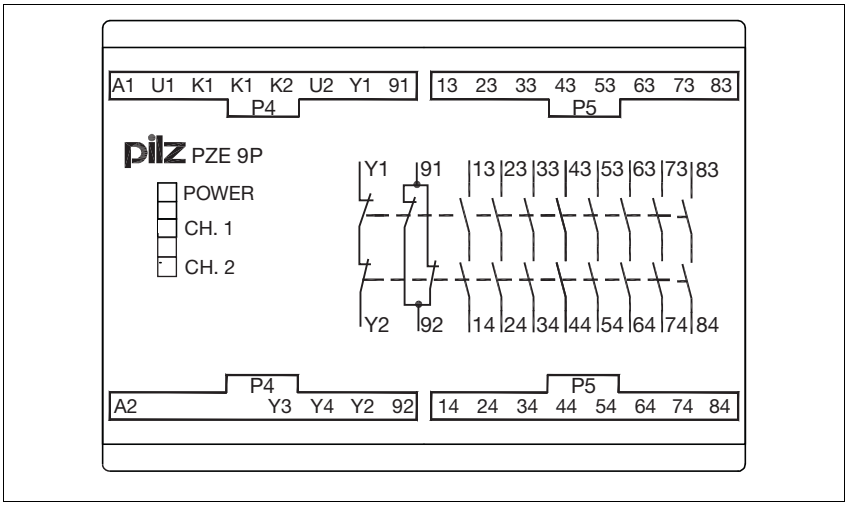

U_B = 24 VAC/DC, 100 – 240 VAC/DC

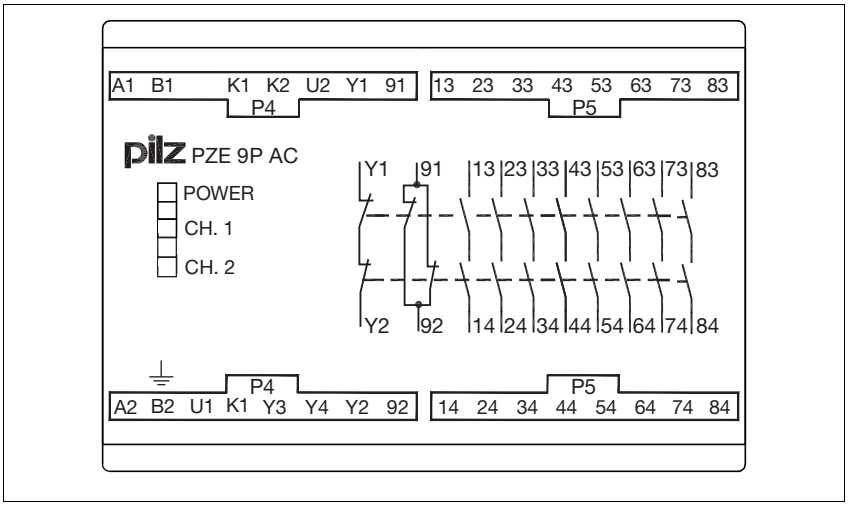

Installation

- The safety relay should be installed in a control cabinet with a protection type of at least IP54.
- Use the notch on the rear of the unit to attach it to a DIN rail.
- Ensure the unit is mounted securely on a vertical DIN rail (35 mm) by using a fixing element (e.g. retaining bracket or an end angle).

Dimensions

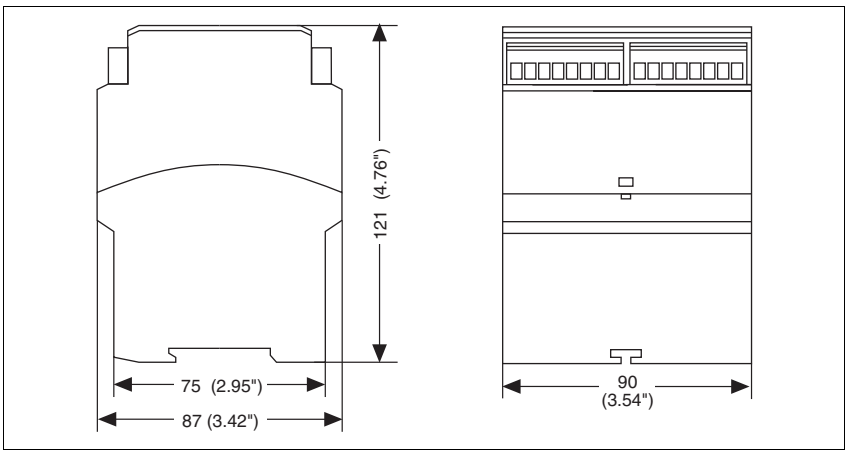

Up to PL e of EN ISO 13849-1
PZE 9P

Notice

This data sheet is only intended for use during configuration. Please refer to the operating manual for installation and operation.

Service life graph

The service life graphs indicate the number of cycles from which failures due to wear must be expected. The wear is mainly caused by the electrical load; the mechanical load is negligible.

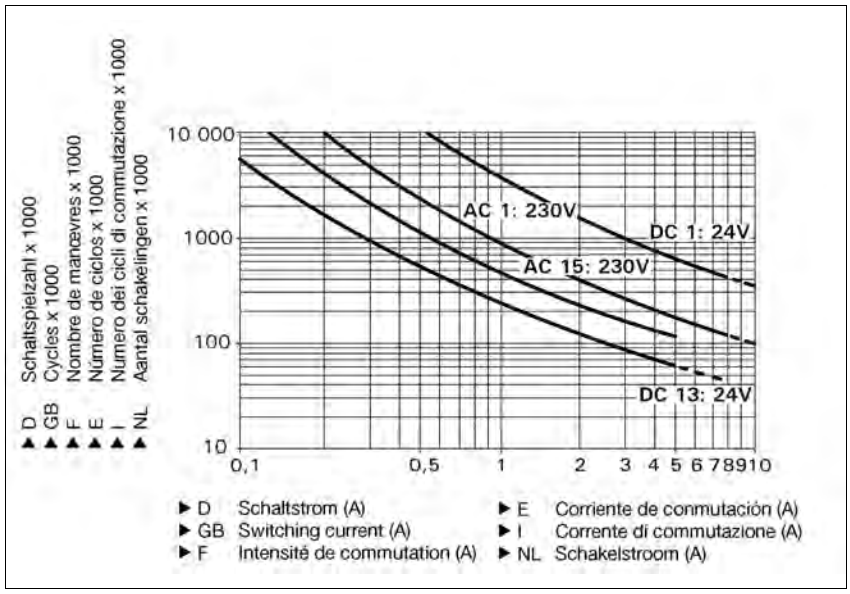

Example

- Inductive load: 0,2 A
- Utilisation category: AC15
- Contact service life: 4,000,000 cycles

Provided the application requires fewer than 4,000,000 cycles, the PFH value (see technical details) can be used in the calculation.

To increase the service life, sufficient spark suppression must be provided on all output contacts. With capacitive loads, any power surges that occur must be noted. With contactors, use freewheel diodes for spark suppression.

Technical details

Electrical data	
Supply voltage	
Supply voltage U_B AC/DC	**24 V**, **100 - 240 V**
Voltage tolerance	**-15 %/+10 %**
Power consumption at U_B AC	**6.0 VA** No. 777148, 787148 **9.5 VA** No. 777140, 787140
Power consumption at U_B DC	**3.5 W**
Frequency range AC	**50 - 60 Hz**
Residual ripple DC	**160 %**
Voltage and current at Input circuit DC: **24.0 V**	 **40.0 mA**
Number of output contacts	
Safety contacts (S) instantaneous:	**8**
Auxiliary contacts (N/C):	**1**

Pilz GmbH & Co. KG, Felix-Wankel-Straße 2, 73760 Ostfildern, Germany
Telephone: +49 711 3409-0, Telefax: +49 711 3409-133, E-Mail: pilz.gmbh@pilz.de

Up to PL e of EN ISO 13849-1
PZE 9P

Electrical data	
Utilisation category in accordance with **EN 60947-4-1**	
Safety contacts: AC1 at **240 V**	I_{min}: **0.01 A** , I_{max}: **8.0 A** P_{max}: **2000 VA**
Safety contacts: DC1 at **24 V**	I_{min}: **0.01 A** , I_{max}: **8.0 A** P_{max}: **200 W**
Auxiliary contacts: AC1 at **240 V**	I_{min}: **0.01 A** , I_{max}: **2.0 A** P_{max}: **500 VA**
Auxiliary contacts: DC1 at **24 V**	I_{min}: **0.01 A** , I_{max}: **2.0 A** P_{max}: **50 W**
Utilisation category in accordance with **EN 60947-5-1**	
Safety contacts: AC15 at **230 V**	I_{max}: **5.0 A**
Safety contacts: DC13 at **24 V** (6 cycles/min)	I_{max}: **7.0 A**
Auxiliary contacts: AC15 at **230 V**	I_{max}: **2.0 A**
Auxiliary contacts: DC13 at **24 V** (6 cycles/min)	I_{max}: **2.0 A**
Contact material	**AgSnO2 + 0.2 µm Au**
External contact fuse protection (I_K = 1 kA) to **EN 60947-5-1**	
Blow-out fuse, quick	
Safety contacts:	**10 A**
Auxiliary contacts:	**4 A**
Blow-out fuse, slow	
Safety contacts:	**6 A**
Auxiliary contacts:	**2 A**
Circuit breaker 24 VAC/DC, characteristic B/C	
Safety contacts:	**6 A**
Auxiliary contacts:	**2 A**
Max. overall cable resistance R_{lmax} per input circuit	
single-channel at U_B DC	**50 Ohm**
single-channel at U_B AC	**80 Ohm**
dual-channel without detect. of shorts across contacts at U_B DC	**100 Ohm**
dual-channel without detect. of shorts across contacts at U_B AC	**160 Ohm**
dual-channel with detect. of shorts across contacts at U_B DC	**3 Ohm** No. 777148, 787148 **5 Ohm** No. 777140, 787140
dual-channel with detect. of shorts across contacts at U_B AC	**10 Ohm** No. 777140, 787140 **8 Ohm** No. 777148, 787148
Safety-related characteristic data	
PL in accordance with **EN ISO 13849-1: 2006**	**PL e** (**Cat. 4**)
Category in accordance with **EN 954-1**	**Cat. 4**
SIL CL in accordance with **EN IEC 62061**	**SIL CL 3**
PFH in accordance with **EN IEC 62061**	**2.31E-09**
SIL in accordance with **IEC 61511**	**SIL 3**
PFD in accordance with **IEC 61511**	**2.03E-06**
T_M [year] in accordance with **EN ISO 13849-1: 2006**	**20**
Times	
Switch-on delay	
with automatic reset typ.	**25 ms** No. 777148, 787148 **30 ms** No. 777140, 787140
with automatic reset max.	**30 ms** No. 777148, 787148 **40 ms** No. 777140, 787140
with automatic reset after power on typ.	**30 ms** No. 777140, 787140 **40 ms** No. 777148, 787148
with automatic reset after power on max.	**40 ms** No. 777140, 787140 **50 ms** No. 777148, 787148

Up to PL e of EN ISO 13849-1
PZE 9P

Times	
Delay-on de-energisation	
with E-STOP typ.	**20 ms**
with E-STOP max.	**30 ms**
with power failure typ.	**110 ms** No. 777140, 787140 **125 ms** No. 777148, 787148
with power failure max.	**200 ms**
with power failure typ. U_B AC/DC: **100 V** No. 777148, 787148	**150 ms** No. 777148, 787148
with power failure max. U_B AC/DC: **100 V** No. 777148, 787148	**200 ms** No. 777148, 787148
with power failure typ. U_B AC : **240 V**	**270 ms** No. 777148, 787148
with power failure max. U_B AC : **240 V**	**400 ms** No. 777148, 787148
Supply interruption before de-energisation	**150 ms** No. 777148, 787148 **20 ms** No. 777140, 787140
Supply interruption before de-energisation in the input circuit	**10.0 ms**
Environmental data	
EMC	**EN 60947-5-1**, **EN 61000-6-2**
Vibration to **EN 60068-2-6**	
Frequency	**10 - 55 Hz**
Amplitude	**0.35 mm**
Climatic suitability	**EN 60068-2-78**
Airgap creepage in accordance with **EN 60947-1**	
Pollution degree	**2**
Overvoltage category	**III**
Rated insulation voltage	**250 V**
Rated impulse withstand voltage	**6.00 kV**
Ambient temperature	**-10 - 55 °C**
Storage temperature	**-40 - 85 °C**
Protection type	
Mounting (e.g. cabinet)	**IP54**
Housing	**IP40**
Terminals	**IP20**
Mechanical data	
Housing material	
Housing	**PPO UL 94 V0**
Front	**ABS UL 94 V0**
Cross section of external conductors with screw terminals	
1 core flexible	**0.25 - 2.50 mm² , 24 - 12 AWG** No. 777140, 777148
2 core, same cross section, flexible:	
with crimp connectors, without insulating sleeve	**0.25 - 1.00 mm² , 24 - 16 AWG** No. 777140, 777148
without crimp connectors or with TWIN crimp connectors	**0.20 - 1.50 mm² , 24 - 16 AWG** No. 777140, 777148
Torque setting with screw terminals	**0.50 Nm** No. 777140, 777148
Cross section of external conductors with spring-loaded terminals: Flexible with/without crimp connectors	**0.20 - 1.50 mm² , 24 - 16 AWG** No. 787140, 787148
Spring-loaded terminals: Terminal points per connection	**2** No. 787140, 787148
Stripping length	**8 mm** No. 787140, 787148
Dimensions	
Height	**87.0 mm**
Width	**90.0 mm**
Depth	**121.0 mm**
Weight	**425 g** No. 787140 **430 g** No. 777140 **445 g** No. 787148 **450 g** No. 777148

No. stands for order number.

Pilz GmbH & Co. KG, Felix-Wankel-Straße 2, 73760 Ostfildern, Germany
Telephone: +49 711 3409-0, Telefax: +49 711 3409-133, E-Mail: pilz.gmbh@pilz.de

Up to PL e of EN ISO 13849-1
PZE 9P

It is essential to consider the relay's service life graphs. The relay outputs' safety-related characteristic data is only valid if the values in the service life graphs are met.

The PFH value depends on the switching frequency and the load on the relay output.
If the service life graphs are not accessible, the stated PFH value can be used irrespective of the switching frequency and the load, as the PFH value already considers the relay's B10d value as well as the failure rates of the other components.

All the units used within a safety function must be considered when calculating the safety characteristic data.

INFORMATION
A safety function's SIL/PL values are **not** identical to the SIL/PL values of the units that are used and may be different. We recommend that you use the PAScal software tool to calculate the safety function's SIL/PL values.

The standards current on **2008-04** apply.

Conventional thermal current while loading several contacts

Number of contacts	I_{th} per contact at U_B DC	I_{th} at U_B AC
1	**8.00 A**	**8.00 A**
2	**8.00 A**	**8.00 A**
3	**8.00 A**	**8.00 A**
4	**7.10 A**	**7.10 A**
5	**6.30 A**	**6.30 A**
6	**5.80 A**	**5.80 A**
7	**5.40 A**	**5.40 A**
8	**5.00 A**	**5.00 A**

Order reference

Type	Features	Terminals	Order no.
PZE 9P C	24 VAC/DC	Spring-loaded terminals	787 140
PZE 9P	24 VAC/DC	Screw terminals	777 140
PZE 9P C	24 VAC/DC, 100 - 240 VAC/DC	Spring-loaded terminals	787 148
PZE 9P	24 VAC/DC, 100 - 240 VAC/DC	Screw terminals	777 148

Pilz GmbH & Co. KG, Felix-Wankel-Straße 2, 73760 Ostfildern, Germany
Telephone: +49 711 3409-0, Telefax: +49 711 3409-133, E-Mail: pilz.gmbh@pilz.de

Contents		Page
Safety relays PNOZsigma		
E-STOP relays, safety gate monitors		
	PNOZ s1	2.3-2
	PNOZ s2	2.3-10
	PNOZ s3	2.3-19
	PNOZ s4	2.3-28
	PNOZ s4.1	2.3-38
	PNOZ s5	2.3-47
Two-hand control devices		
	PNOZ s6	2.3-58
	PNOZ s6.1	2.3-67
Contact expansion		
	PNOZ s7	2.3-78
	PNOZ s7.1	2.3-86
	PNOZ s7.2	2.3-97
	PNOZ s8	2.3-107
	PNOZ s10	2.3-114
	PNOZ s11	2.3-122
	PNOZ s22	2.3-130
Safe timer relay/contact expansion modules		
	PNOZ s9	2.3-137
Speed monitoring		
	PNOZ s30	2.3-148

Up to PL c of EN ISO 13849-1
PNOZ s1



Safety relay for monitoring E-STOP pushbuttons and safety gates.

Approvals

	PNOZ s1
c UL us LISTED	◆
TÜV	◆
CCC	◆

Unit features

- Relay outputs:
  - 2 safety contacts (N/O), instantaneous
- 1 semiconductor output
- Connection options for:
  - E-STOP pushbutton
  - Safety gate limit switch
  - Reset button
- A connector can be used to connect 1 PNOZsigma contact expander module
- LED indicator for:
  - Supply voltage
  - Input status, channel 1
  - Input status, channel 2
  - Switch status, safety contacts
  - Reset circuit
  - Error
- Plug-in connection terminals (either spring-loaded terminal or screw terminal)

Unit description

The safety relay meets the requirements of EN 60947-5-1, EN 60204-1 and VDE 0113-1 and may be used in applications with

- E-STOP pushbuttons
- Safety gates

Safety features

The relay meets the following safety requirements:

- The circuit is redundant with built-in self-monitoring.
- The safety function remains effective in the case of a component failure.
- The correct opening and closing of the safety function relays is tested automatically in each on-off cycle.
- The unit has an electronic fuse.

Block diagram

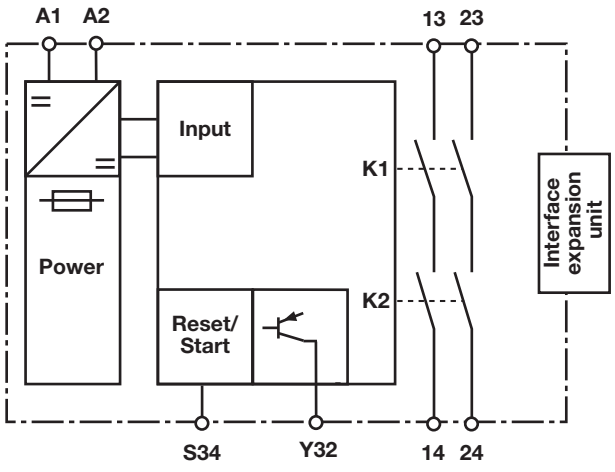

Pilz GmbH & Co. KG, Felix-Wankel-Straße 2, 73760 Ostfildern, Germany
Telephone: +49 711 3409-0, Telefax: +49 711 3409-133, E-Mail: pilz.gmbh@pilz.de

Up to PL c of EN ISO 13849-1
PNOZ s1

Function description

- Single-channel operation: no redundancy in the input circuit, earth faults in the reset and input circuit are detected.
- Automatic start: Unit is active once the input circuit has been closed.
- Manual reset: Unit is active once the input circuit is closed and then the reset circuit is closed.
- Increase in the number of available instantaneous safety contacts by connecting contact expander modules or external contactors/relays; A connector can be used to connect 1 PNOZsigma contact expander module.

Timing diagram

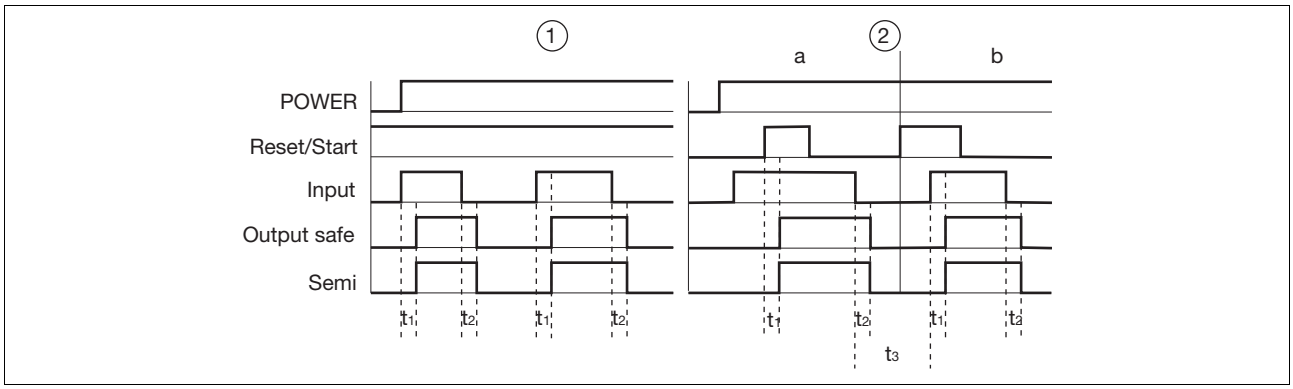

Key

- Power: Supply voltage
- Reset/Start: Reset circuit S34
- Input: Input circuits A1-A2
- Output safe: Safety contacts 13-14, 23-24
- Semi: Semiconductor outputY32
- ①: Automatic reset
- ②: Manual reset
- a: Input circuit closes before reset circuit
- b: Reset circuit closes before input circuit
- t_1: Switch-on delay
- t_2: Delay-on de-energisation
- t_3: Recovery time

Wiring

Please note:

- Information given in the “Technical details” must be followed.
- Outputs 13-14, 23-24 are safety contacts.
- To prevent contact welding, a fuse should be connected before the output contacts (see technical details).
- Calculation of the max. cable runs l_{max} in the input circuit:

$$l_{max} = \frac{R_{lmax}}{R_l / km}$$

R_{lmax} = max. overall cable resistance (see technical details)
R_l /km = cable resistance/km

- Use copper wire that can withstand 60/75 °C.
- Sufficient fuse protection must be provided on all output contacts with capacitive and inductive loads.

Up to PL c of EN ISO 13849-1
PNOZ s1

Preparing for operation

- Supply voltage

Supply voltage	AC	DC
		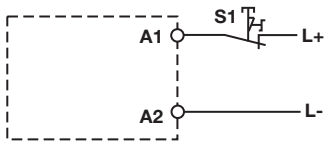

- Input circuit

Input circuit	Single-channel	Dual-channel
E-STOP **without** detection of shorts across contacts	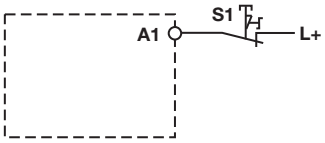	
Safety gate **without** detection of shorts across contacts	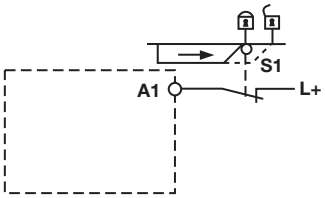	

- Reset circuit

Reset circuit	Reset circuit	Feedback circuit
Automatic reset	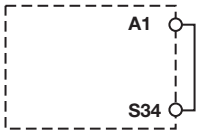	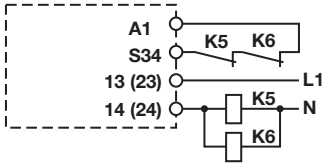
Manual reset	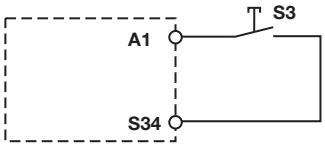	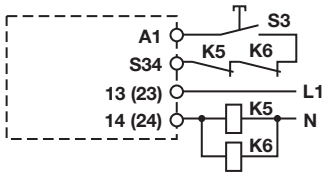

Pilz GmbH & Co. KG, Felix-Wankel-Straße 2, 73760 Ostfildern, Germany
Telephone: +49 711 3409-0, Telefax: +49 711 3409-133, E-Mail: pilz.gmbh@pilz.de

Up to PL c of EN ISO 13849-1
PNOZ s1

- Semiconductor output

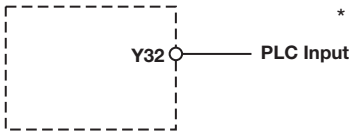

*Connect together the 0V connections on all the external power supplies

- Key

S1	E-STOP pushbutton
S3	Reset button
	Switch operated
	Gate open
	Gate closed

INFORMATION
If a base unit and a contact expansion module from the PNOZsigma range are linked via the connector, no additional wiring is necessary.

Up to PL c of EN ISO 13849-1
PNOZ s1

Terminal configuration

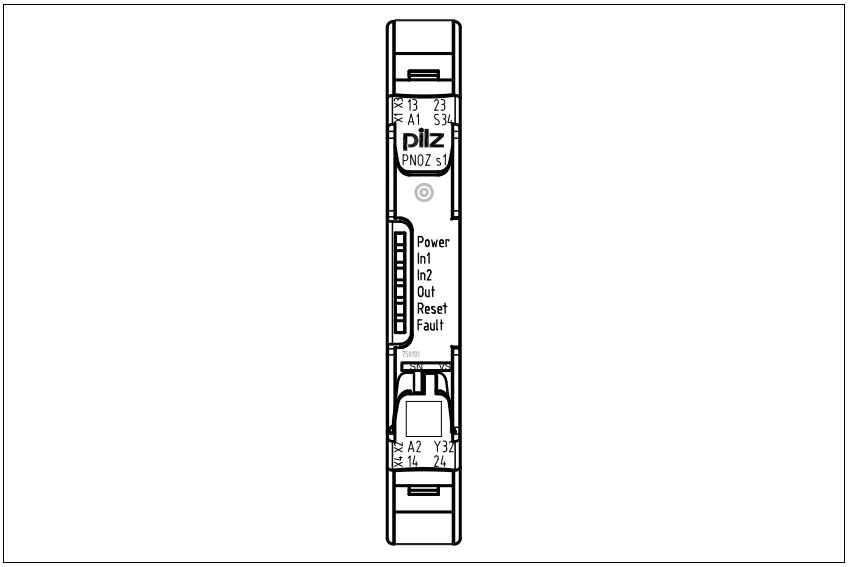

Installation

Install base unit without contact expander module:

- Ensure that the plug terminator is inserted at the side of the unit.

Connect base unit and PNOZsigma contact expander module:

- Remove the plug terminator at the side of the base unit and at the contact expander module.
- Connect the base unit and the contact expander module to the supplied connector before mounting the units to the DIN rail.

Installation in control cabinet

- The safety relay should be installed in a control cabinet with a protection type of at least IP54.
- Use the notch on the rear of the unit to attach it to a DIN rail (35 mm).
- When installed vertically: Secure the unit by using a fixing element (e.g. retaining brakket or end angle).
- Push the unit upwards or downwards before lifting it from the DIN rail.

Dimensions

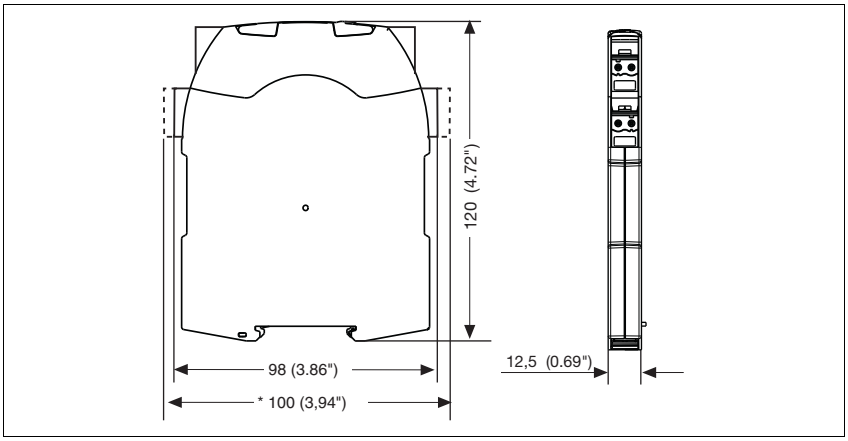

Pilz GmbH & Co. KG, Felix-Wankel-Straße 2, 73760 Ostfildern, Germany
Telephone: +49 711 3409-0, Telefax: +49 711 3409-133, E-Mail: pilz.gmbh@pilz.de

Up to PL c of EN ISO 13849-1
PNOZ s1

NOTICE

This data sheet is only intended for use during configuration. Please refer to the operating manual for installation and operation.

Technical details	
Electrical data	
Supply voltage	
Supply voltage U_B DC	**24 V**
Voltage tolerance	**-15 %/+10 %**
Power consumption at U_B DC	**2.0 W**
Residual ripple DC	**20 %**
Voltage and current at	
Input circuit DC: **24.0 V**	**60.0 mA**
Reset circuit DC: **24.0 V**	**20.0 mA**
Feedback loop DC: **24.0 V**	**20.0 mA**
Number of output contacts	
Safety contacts (S) instantaneous:	**2**
Utilisation category in accordance with **EN 60947-4-1**	
Safety contacts: AC1 at **240 V**	I_{min}: **0.02 A** , I_{max}: **3.0 A** P_{max}: **720 VA**
Safety contacts: DC1 at **24 V**	I_{min}: **0.02 A** , I_{max}: **3.0 A** P_{max}: **72 W**
Utilisation category in accordance with **EN 60947-5-1**	
Safety contacts: AC15 at **230 V**	I_{max}: **1.5 A**
Safety contacts: DC13 at **24 V** (6 cycles/min)	I_{max}: **1.5 A**
Contact material	**AgSnO2**
External contact fuse protection (I_K = 1 kA) to **EN 60947-5-1**	
Blow-out fuse, quick	
Safety contacts:	**4 A**
Blow-out fuse, slow	
Safety contacts:	**2 A**
Circuit breaker 24 VAC/DC, characteristic B/C	
Safety contacts:	**2 A**
Semiconductor outputs (short circuit proof)	**24.0 V** DC, **20 mA**
Max. overall cable resistance R_{lmax} input circuits, reset circuits	
single-channel at U_B DC	**30 Ohm**
Safety-related characteristic data	
PL in accordance with **EN ISO 13849-1: 2006**	**PL c** (**Cat. 3**)
Category in accordance with **EN 954-1**	**Cat. 3**
SIL CL in accordance with **EN IEC 62061**	**SIL CL 2**
PFH in accordance with **EN IEC 62061**	**2.00E-07**
SIL in accordance with **IEC 61511**	**SIL 2**
PFD in accordance with **IEC 61511**	**5.95E-03**
T_M [year] in accordance with **EN ISO 13849-1: 2006**	**20**
Times	
Switch-on delay	
with automatic reset typ.	**100 ms**
with automatic reset max.	**150 ms**
with automatic reset after power on typ.	**100 ms**
with automatic reset after power on max.	**150 ms**
with manual reset typ.	**50 ms**
with manual reset max.	**60 ms**

Up to PL c of EN ISO 13849-1
PNOZ s1

Times	
Delay-on de-energisation	
with E-STOP typ.	**30 ms**
with E-STOP max.	**40 ms**
with power failure typ.	**30 ms**
with power failure max.	**40 ms**
Recovery time at max. switching frequency 1/s	
after E-STOP	**100 ms**
after power failure	**100 ms**
Supply interruption before de-energisation	**10 ms**
Environmental data	
EMC	**EN 60947-5-1**, **EN 61000-6-2**, **EN 61000-6-4**
Vibration to **EN 60068-2-6**	
Frequency	**10 - 55 Hz**
Amplitude	**0.35 mm**
Climatic suitability	**EN 60068-2-78**
Airgap creepage in accordance with **EN 60947-1**	
Pollution degree	**2**
Overvoltage category	**III**
Rated insulation voltage	**250 V**
Rated impulse withstand voltage	**4.00 kV**
Ambient temperature	**-10 - 55 °C**
Storage temperature	**-40 - 85 °C**
Protection type	
Mounting (e.g. cabinet)	**IP54**
Housing	**IP40**
Terminals	**IP20**
Mechanical data	
Housing material	
Housing	**PC**
Front	**PC**
Cross section of external conductors with screw terminals	
1 core flexible	**0.25 - 2.50 mm² , 24 - 12 AWG** No. 750101
2 core, same cross section, flexible:	
with crimp connectors, without insulating sleeve	**0.25 - 1.00 mm² , 24 - 16 AWG** No. 750101
without crimp connectors or with TWIN crimp connectors	**0.20 - 1.50 mm² , 24 - 16 AWG** No. 750101
Torque setting with screw terminals	**0.50 Nm** No. 750101
Cross section of external conductors with spring-loaded terminals: Flexible with/without crimp connectors	**0.20 - 2.50 mm² , 24 - 12 AWG** No. 751101
Spring-loaded terminals: Terminal points per connection	**2** No. 751101
Stripping length	**9 mm** No. 751101
Dimensions	
Height	**100.0 mm** No. 751101 **98.0 mm** No. 750101
Width	**12.5 mm**
Depth	**120.0 mm**
Weight	**105 g**

No. stands for order number.

All the units used within a safety function must be considered when calculating the safety characteristic data.

Pilz GmbH & Co. KG, Felix-Wankel-Straße 2, 73760 Ostfildern, Germany
Telephone: +49 711 3409-0, Telefax: +49 711 3409-133, E-Mail: pilz.gmbh@pilz.de

Up to PL c of EN ISO 13849-1
PNOZ s1

INFORMATION
A safety function's SIL/PL values are **not** identical to the SIL/PL values of the units that are used and may be different. We recommend that you use the PAScal software tool to calculate the safety function's SIL/PL values.

The standards current on **2006-04** apply.

Conventional thermal current while loading several contacts

Number of contacts	I_{th} per contact at U_B DC
1	**3.00 A**
2	**3.00 A**

Order reference

Type	Features		Terminals	Order no.
PNOZ s1		24 VDC	With screw terminal	750 101
PNOZ s1 C		24 VDC	With spring-loaded terminal	751 101

Up to PL e of EN ISO 13849-1
PNOZ s2



Safety relay for monitoring E-STOP pushbuttons and safety gates.

Approvals

	PNOZ s2
cULus LISTED	◆
TÜV SÜD	◆
CCC	◆

Unit features

- Positive-guided relay outputs:
  - 3 safety contacts (N/O), instantaneous
  - 1 auxiliary contact (N/C), instantaneous
- Safe separation of safety contacts from all other circuits
- 1 semiconductor output
- Connection options for:
  - E-STOP pushbutton
  - Safety gate limit switch
  - Reset button
- A connector can be used to connect 1 PNOZsigma contact expander module
- Operating modes can be set via rotary switch
- LED indicator for:
- Supply voltage
- Input status, channel 1
- Input status, channel 2
- Switch status, safety contacts
- Reset circuit
- Error
- Plug-in connection terminals (either spring-loaded terminal or screw terminal)
- See order reference for unit types

Unit description

The safety relay meets the requirements of EN 60947-5-1, EN 60204-1 and VDE 0113-1 and may be used in applications with

- E-STOP pushbuttons
- Safety gates

Safety features

The relay meets the following safety requirements:

- The circuit is redundant with built-in self-monitoring.
- The safety function remains effective in the case of a component failure.
- The correct opening and closing of the safety function relays is tested automatically in each on-off cycle.
- The unit has an electronic fuse.

Block diagram

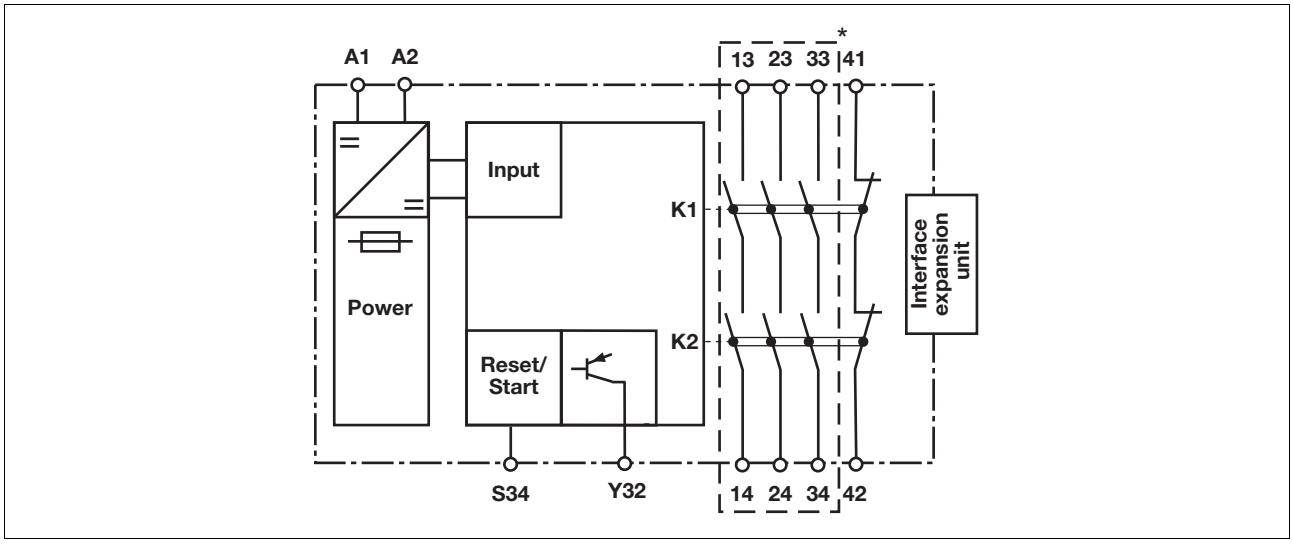

* Safe separation in accordance with EN 60947-1, 6 kV

Pilz GmbH & Co. KG, Felix-Wankel-Straße 2, 73760 Ostfildern, Germany
Telephone: +49 711 3409-0, Telefax: +49 711 3409-133, E-Mail: pilz.gmbh@pilz.de
1001968-EN-03-2011-11

Up to PL e of EN ISO 13849-1
PNOZ s2

Function description

- Single-channel operation: no redundancy in the input circuit, earth faults in the reset and input circuit are detected.
- Automatic start: Unit is active once the input circuit has been closed.
- Manual reset: Unit is active once the input circuit is closed and then the reset circuit is closed.
- Monitored reset with falling edge: Unit is active once
  - the input circuit is closed and then the reset circuit is closed and opened again.
  - the reset circuit is closed and then opened again once the input circuit is closed.
- Monitored reset with rising edge: Unit is active once the input circuit is closed and once the reset circuit is closed after the waiting period has elapsed (see technical details).
- Increase in the number of available instantaneous safety contacts by connecting contact expander modules or external contactors/relays; A connector can be used to connect 1 PNOZsigma contact expander module.

Timing diagram

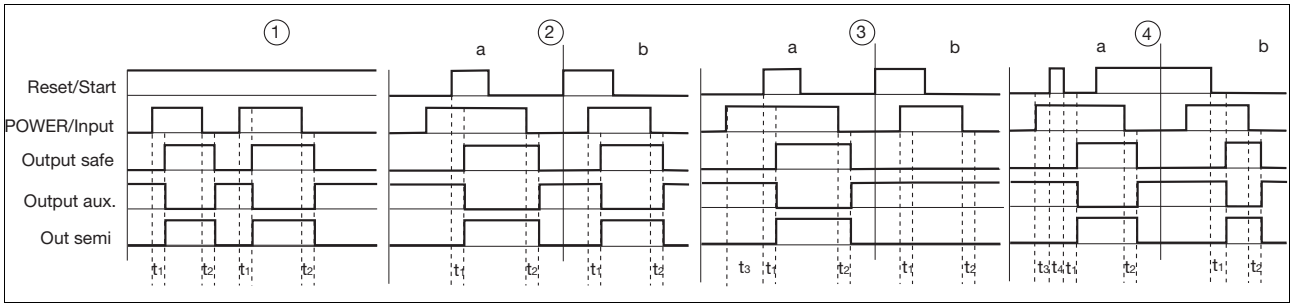

Key

- Power: Supply voltage
- Reset/Start: Reset circuit S34
- Input: Input circuits A1-A2
- Output safe: Safety contacts 13-14, 23-24, 33-34
- Output aux: Auxiliary contacts 41-42
- Out semi: Semiconductor outputY32
- ①: Automatic reset
- ②: Manual reset
- ③: Monitored reset with rising edge
- ④: Monitored reset with falling edge
- a: Input circuit closes before reset circuit
- b: Reset circuit closes before input circuit
- t_1: Switch-on delay
- t_2: Delay-on de-energisation
- t_3: Waiting period
- t_4: Waiting period reset circuit was closed

Wiring

Please note:

- Information given in the “Technical details” must be followed.
- Outputs 13-14, 23-24, 33-34 are safety contacts, output 41-42 is an auxiliary contact (e.g. for display).
- To prevent contact welding, a fuse should be connected before the output contacts (see technical details).
- Calculation of the max. cable runs I_{max} in the input circuit:

$$I_{max} = \frac{R_{lmax}}{R_l / km}$$

R_{lmax} = max. overall cable resistance (see technical details)
R_l /km = cable resistance/km

- Use copper wire that can withstand 60/75 °C.
- Sufficient fuse protection must be provided on all output contacts with capacitive and inductive loads.

Pilz GmbH & Co. KG, Felix-Wankel-Straße 2, 73760 Ostfildern, Germany
Telephone: +49 711 3409-0, Telefax: +49 711 3409-133, E-Mail: pilz.gmbh@pilz.de

Up to PL e of EN ISO 13849-1
PNOZ s2

Preparing for operation

- Supply voltage

Supply voltage	AC	DC
		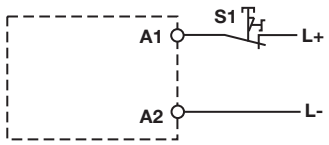

- Input circuit

Input circuit	Single-channel	Dual-channel
E-STOP **without** detection of shorts across contacts	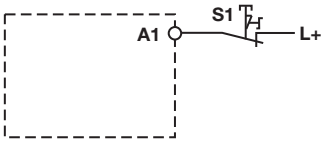	
Safety gate **without** detection of shorts across contacts	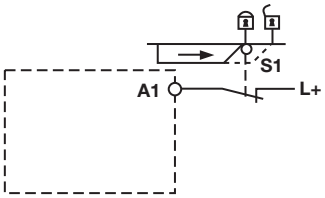	

- Reset circuit/feedback loop

Reset circuit/feedback loop	Reset circuit	Feedback circuit
Automatic reset	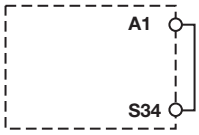	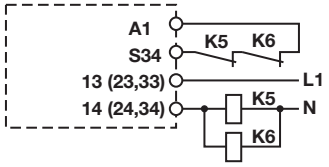
Manual/monitored reset	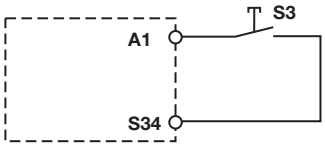	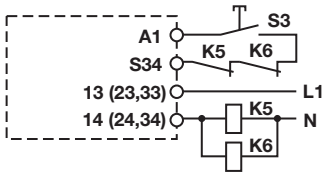

Pilz GmbH & Co. KG, Felix-Wankel-Straße 2, 73760 Ostfildern, Germany
Telephone: +49 711 3409-0, Telefax: +49 711 3409-133, E-Mail: pilz.gmbh@pilz.de

Up to PL e of EN ISO 13849-1
PNOZ s2

- Semiconductor output

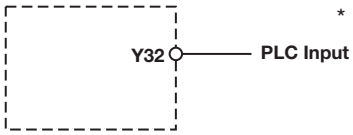

*Connect together the 0V connections on all the external power supplies

- Key

S1	E-STOP pushbutton
S3	Reset button
	Gate open
	Gate closed

INFORMATION
If a base unit and a contact expansion module from the PNOZsigma range are linked via the connector, no additional wiring is necessary.

Up to PL e of EN ISO 13849-1
PNOZ s2

Terminal configuration

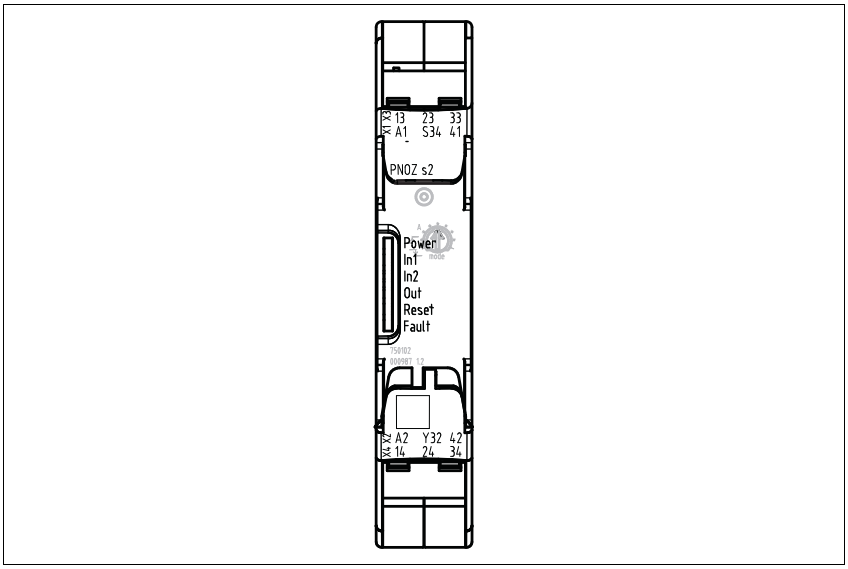

Installation

Install base unit without contact expander module:
- Ensure that the plug terminator is inserted at the side of the unit.

Connect base unit and PNOZsigma contact expander module:
- Remove the plug terminator at the side of the base unit and at the contact expander module.
- Connect the base unit and the contact expander module to the supplied connector before mounting the units to the DIN rail.

Installation in control cabinet
- The safety relay should be installed in a control cabinet with a protection type of at least IP54.
- Use the notch on the rear of the unit to attach it to a DIN rail (35 mm).
- When installed vertically: Secure the unit by using a fixing element (e.g. retaining brakket or end angle).
- Push the unit upwards or downwards before lifting it from the DIN rail.

Dimensions

*with spring-loaded terminals

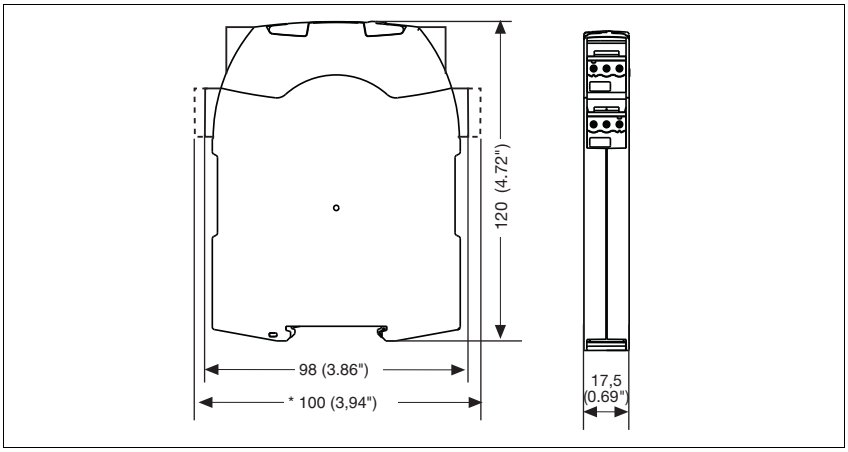

Pilz GmbH & Co. KG, Felix-Wankel-Straße 2, 73760 Ostfildern, Germany
Telephone: +49 711 3409-0, Telefax: +49 711 3409-133, E-Mail: pilz.gmbh@pilz.de

Up to PL e of EN ISO 13849-1
PNOZ s2

Notice

This data sheet is only intended for use during configuration. Please refer to the operating manual for installation and operation.

Service life graph

The service life graphs indicate the number of cycles from which failures due to wear must be expected. The wear is mainly caused by the electrical load; the mechanical load is negligible.

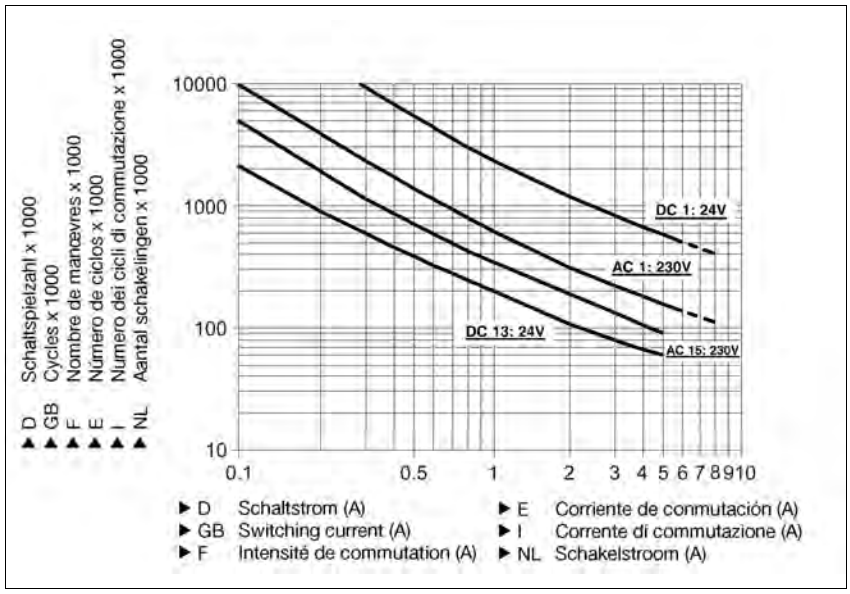

Example
- Inductive load: 0,2 A
- Utilisation category: AC15
- Contact service life: 2,000,000 cycles

Provided the application requires fewer than 2,000,000 cycles, the PFH value (see technical details) can be used in the calculation.

To increase the service life, sufficient spark suppression must be provided on all output contacts. With capacitive loads, any power surges that occur must be noted. With contactors, use freewheel diodes for spark suppression.

Technical details

Electrical data	
Supply voltage	
Supply voltage U_B DC	**24 V**
Voltage tolerance	**-15 %/+10 %**
Power consumption at U_B DC	**2.0 W**
Residual ripple DC	**20 %**
Voltage and current at	
Input circuit DC: **24.0 V**	**75.0 mA**
Reset circuit DC: **24.0 V**	**7.0 mA**
Feedback loop DC: **24.0 V**	**7.0 mA**
Number of output contacts	
Safety contacts (S) instantaneous:	**3**
Auxiliary contacts (N/C):	**1**

Pilz GmbH & Co. KG, Felix-Wankel-Straße 2, 73760 Ostfildern, Germany
Telephone: +49 711 3409-0, Telefax: +49 711 3409-133, E-Mail: pilz.gmbh@pilz.de

Up to PL e of EN ISO 13849-1
PNOZ s2

Electrical data	
Utilisation category in accordance with **EN 60947-4-1**	
Safety contacts: AC1 at **240 V**	I_{min}: **0.01 A** , I_{max}: **6.0 A** P_{max}: **1500 VA**
Safety contacts: DC1 at **24 V**	I_{min}: **0.01 A** , I_{max}: **6.0 A** P_{max}: **150 W**
Auxiliary contacts: AC1 at **240 V**	I_{min}: **0.01 A** , I_{max}: **6.0 A** P_{max}: **1500 VA**
Auxiliary contacts: DC1 at **24 V**	I_{min}: **0.01 A** , I_{max}: **6.0 A** P_{max}: **150 W**
Utilisation category in accordance with **EN 60947-5-1**	
Safety contacts: AC15 at **230 V**	I_{max}: **5.0 A**
Safety contacts: DC13 at **24 V** (6 cycles/min)	I_{max}: **5.0 A**
Auxiliary contacts: AC15 at **230 V**	I_{max}: **5.0 A**
Auxiliary contacts: DC13 at **24 V** (6 cycles/min)	I_{max}: **5.0 A**
Contact material	**AgCuNi + 0.2 µm Au**
External contact fuse protection (I_K = 1 kA) to **EN 60947-5-1**	
Blow-out fuse, quick	
Safety contacts:	**10 A**
Auxiliary contacts:	**10 A**
Blow-out fuse, slow	
Safety contacts:	**6 A**
Auxiliary contacts:	**6 A**
Circuit breaker 24 VAC/DC, characteristic B/C	
Safety contacts:	**6 A**
Auxiliary contacts:	**6 A**
Semiconductor outputs (short circuit proof)	**24.0 V** DC, **20 mA**
Max. overall cable resistance R_{lmax} input circuits, reset circuits	
single-channel at U_B DC	**30 Ohm**
Safety-related characteristic data	
PL in accordance with **EN ISO 13849-1: 2006**	**PL e** (**Cat. 4**)
Category in accordance with **EN 954-1**	**Cat. 4**
SIL CL in accordance with **EN IEC 62061**	**SIL CL 3**
PFH in accordance with **EN IEC 62061**	**2.50E-09**
SIL in accordance with **IEC 61511**	**SIL 3**
PFD in accordance with **IEC 61511**	**2.13E-05**
T_M [year] in accordance with **EN ISO 13849-1: 2006**	**20**
Times	
Switch-on delay	
with automatic reset typ.	**75 ms**
with automatic reset max.	**250 ms**
with automatic reset after power on typ.	**75 ms**
with automatic reset after power on max.	**250 ms**
with manual reset typ.	**75 ms**
with manual reset max.	**250 ms**
on monitored reset with rising edge typ.	**75 ms**
on monitored reset with rising edge max.	**250 ms**
on monitored reset with falling edge typ.	**55 ms**
on monitored reset with falling edge max.	**70 ms**
Delay-on de-energisation	
with E-STOP typ.	**50 ms**
with E-STOP max.	**70 ms**
with power failure typ.	**50 ms**
with power failure max.	**70 ms**
Recovery time at max. switching frequency 1/s	
after E-STOP	**100 ms**
after power failure	**100 ms**

Pilz GmbH & Co. KG, Felix-Wankel-Straße 2, 73760 Ostfildern, Germany
Telephone: +49 711 3409-0, Telefax: +49 711 3409-133, E-Mail: pilz.gmbh@pilz.de

Up to PL e of EN ISO 13849-1
PNOZ s2

Times	
Waiting period with a monitored reset	
with rising edge	**100 ms**
with falling edge	**110 ms**
Min. start pulse duration with a monitored reset	
with rising edge	**100 ms**
with falling edge	**100 ms**
Supply interruption before de-energisation	**10 ms**
Environmental data	
EMC	**EN 60947-5-1**, **EN 61000-6-2**, **EN 61000-6-4**
Vibration to **EN 60068-2-6**	
Frequency	**10 - 55 Hz**
Amplitude	**0.35 mm**
Climatic suitability	**EN 60068-2-78**
Airgap creepage in accordance with **EN 60947-1**	
Pollution degree	**2**
Overvoltage category	**III**
Rated insulation voltage	**250 V**
Rated impulse withstand voltage	**6.00 kV**
Ambient temperature	**-10 - 55 °C**
Storage temperature	**-40 - 85 °C**
Protection type	
Mounting (e.g. cabinet)	**IP54**
Housing	**IP40**
Terminals	**IP20**
Mechanical data	
Housing material	
Housing	**PC**
Front	**PC**
Cross section of external conductors with screw terminals	
1 core flexible	**0.25 - 2.50 mm² , 24 - 12 AWG** No. 750102
2 core, same cross section, flexible:	
with crimp connectors, without insulating sleeve	**0.25 - 1.00 mm² , 24 - 16 AWG** No. 750102
without crimp connectors or with TWIN crimp connectors	**0.20 - 1.50 mm² , 24 - 16 AWG** No. 750102
Torque setting with screw terminals	**0.50 Nm** No. 750102
Cross section of external conductors with spring-loaded terminals: Flexible with/without crimp connectors	**0.20 - 2.50 mm² , 24 - 12 AWG** No. 751102
Spring-loaded terminals: Terminal points per connection	**2** No. 751102
Stripping length	**9 mm** No. 751102
Dimensions	
Height	**102.0 mm** No. 751102 **96.0 mm** No. 750102
Width	**17.5 mm**
Depth	**120.0 mm**
Weight	**170 g**

No. stands for order number.

It is essential to consider the relay's service life graphs. The relay outputs' safety-related characteristic data is only valid if the values in the service life graphs are met.

The PFH value depends on the switching frequency and the load on the relay output.
If the service life graphs are not accessible, the stated PFH value can be used irrespective of the switching frequency and the load, as the PFH value already considers the relay's B10d value as well as the failure rates of the other components.

All the units used within a safety function must be considered when calculating the safety characteristic data.

Pilz GmbH & Co. KG, Felix-Wankel-Straße 2, 73760 Ostfildern, Germany
Telephone: +49 711 3409-0, Telefax: +49 711 3409-133, E-Mail: pilz.gmbh@pilz.de

Up to PL e of EN ISO 13849-1
PNOZ s2

INFORMATION
A safety function's SIL/PL values are **not** identical to the SIL/PL values of the units that are used and may be different. We recommend that you use the PAScal software tool to calculate the safety function's SIL/PL values.

The standards current on **2006-04** apply.

Conventional thermal current while loading several contacts

Number of contacts	I_{th} per contact at U_B DC
1	**6.00 A**
2	**6.00 A**
3	**5.00 A**

Order reference

Type	Features		Terminals	Order no.
PNOZ s2		24 VDC	With screw terminal	750 102
PNOZ s2 C		24 VDC	With spring-loaded terminal	751 102

Pilz GmbH & Co. KG, Felix-Wankel-Straße 2, 73760 Ostfildern, Germany
Telephone: +49 711 3409-0, Telefax: +49 711 3409-133, E-Mail: pilz.gmbh@pilz.de

Up to PL e of EN ISO 13849-1
PNOZ s3



Safety relay for monitoring E-STOP pushbuttons, safety gates and light beam devices

Approvals

	PNOZ s3
cULus LISTED	◆
TÜV SÜD	◆
CCC	◆

Unit features

- Positive-guided relay outputs:
  - 2 safety contacts (N/O), instantaneous
- 1 semiconductor output
- Connection options for:
  - E-STOP pushbutton
  - Safety gate limit switch
  - Reset button
  - Light barriers
  - PSEN
- A connector can be used to connect 1 PNOZsigma contact expander module
- Operating modes can be set via rotary switch
- LED indicator for:
  - Supply voltage
  - Input status, channel 1
  - Input status, channel 2
  - Switch status channel 1/2
  - Reset circuit
  - Error
- Plug-in connection terminals (either spring-loaded terminal or screw terminal)

Unit description

The safety relay meets the requirements of EN 60947-5-1, EN 60204-1 and VDE 0113-1 and may be used in applications with

- E-STOP pushbuttons
- Safety gates
- Light beam devices

Safety features

The relay meets the following safety requirements:

- The circuit is redundant with built-in self-monitoring.
- The safety function remains effective in the case of a component failure.
- The correct opening and closing of the safety function relays is tested automatically in each on-off cycle.
- The unit has an electronic fuse.

Block diagram

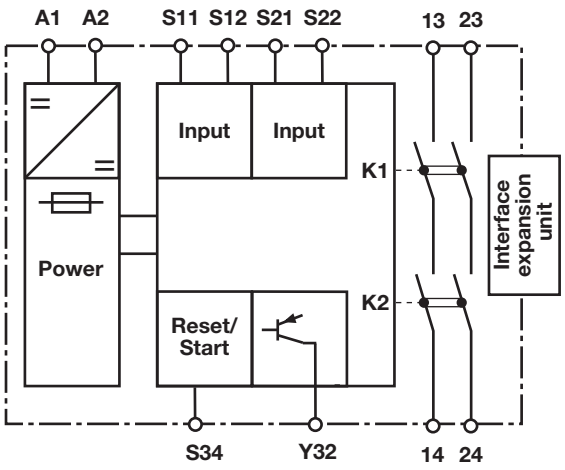

Pilz GmbH & Co. KG, Felix-Wankel-Straße 2, 73760 Ostfildern, Germany
Telephone: +49 711 3409-0, Telefax: +49 711 3409-133, E-Mail: pilz.gmbh@pilz.de

Up to PL e of EN ISO 13849-1
PNOZ s3

Function description

- Single-channel operation: no redundancy in the input circuit, earth faults in the reset circuit and input circuit are detected.
- Dual-channel operation without detection of shorts across contacts: redundant input circuit, detects
  - earth faults in the reset and input circuit,
  - short circuits in the input circuit and, with a monitored reset, in the reset circuit too.
- Dual-channel operation with detection of shorts across contacts: redundant input circuit, detects
  - earth faults in the reset and input circuit,
  - short circuits in the input circuit and, with a monitored reset, in the reset circuit too,
  - shorts between contacts in the input circuit.
- Automatic reset: Unit is active once the input circuit has been closed.
- Manual reset: Unit is active once the input circuit is closed and then the reset circuit is closed.
- Monitored reset with falling edge: Unit is active once
  - the input circuit is closed and then the reset circuit is closed and opened again.
  - the reset circuit is closed and then opened again once the input circuit is closed.
- Monitored reset with rising edge: Unit is active once the input circuit is closed and once the reset circuit is closed after the waiting period has elapsed (see technical details).
- Reset with start-up test: The unit checks whether safety gates that are closed are opened and then closed again when supply voltage is applied.
- Increase in the number of available instantaneous safety contacts by connecting contact expander modules or external contactors/relays; A connector can be used to connect 1 PNOZsigma contact expander module.

Timing diagram

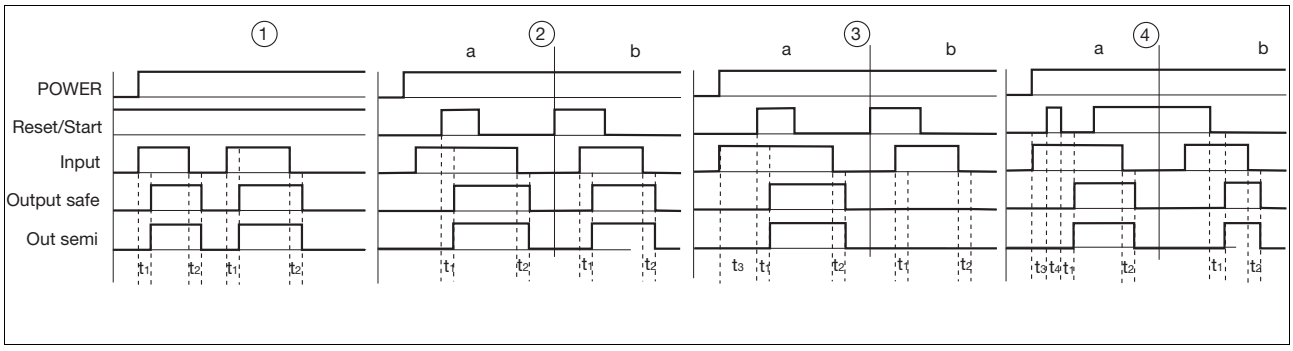

Key

- Power: Supply voltage
- Reset/Start: Reset circuit S12-S34
- Input: Input circuits S11-S12, S21-S22
- Output safe: Safety contacts 13-14, 23-24
- Out semi: Semiconductor outputY32
- ①: Automatic reset
- ②: Manual reset
- ③: Monitored reset with rising edge
- ④: Monitored reset with falling edge
- a: Input circuit closes before reset circuit
- b: Reset circuit closes before input circuit
- t_1: Switch-on delay
- t_2: Delay-on de-energisation
- t_3: Waiting period
- t_4: Waiting period reset circuit was closed

Wiring

Please note:

- Information given in the “Technical details” must be followed.
- Outputs 13-14, 23-24 are safety contacts.
- To prevent contact welding, a fuse should be connected before the output contacts (see technical details).
- Calculation of the max. cable runs I_{max} in the input circuit:

$$I_{max} = \frac{R_{lmax}}{R_l / km}$$

R_{lmax} = max. overall cable resistance (see technical details)
R_l /km = cable resistance/km

- Use copper wire that can withstand 60/75 °C.
- Sufficient fuse protection must be provided on all output contacts with capacitive and inductive loads.

Pilz GmbH & Co. KG, Felix-Wankel-Straße 2, 73760 Ostfildern, Germany
Telephone: +49 711 3409-0, Telefax: +49 711 3409-133, E-Mail: pilz.gmbh@pilz.de

1001969-EN-04-2011-09

Up to PL e of EN ISO 13849-1
PNOZ s3

Preparing for operation

- Supply voltage

Supply voltage	AC	DC
		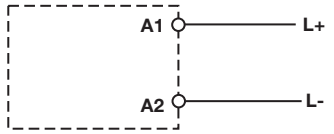

- Input circuit

Input circuit	Single-channel	Dual-channel
E-STOP **without** detection of shorts across contacts	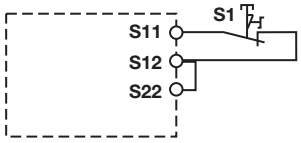	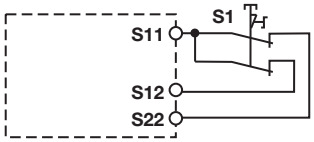
E-STOP **with** detection of shorts across contacts		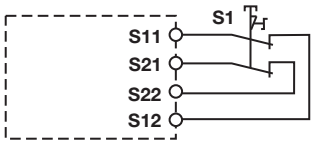
Safety gate **without** detection of shorts across contacts	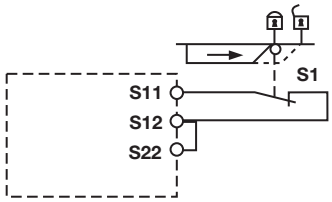	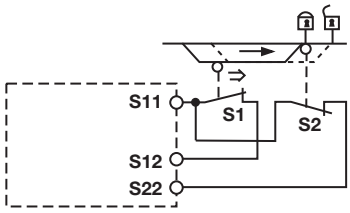
Safety gate **with** detection of shorts across contacts		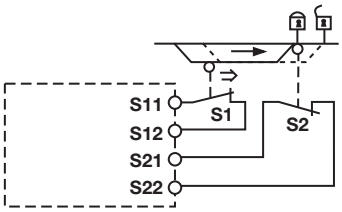
Light beam device or safety switch **with** detection of shorts across contacts via ESPE		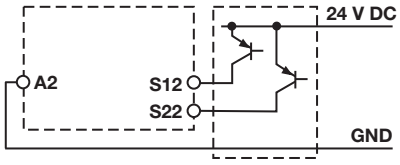

Up to PL e of EN ISO 13849-1
PNOZ s3

- Reset circuit/feedback loop

Reset circuit/feedback loop	Reset circuit	Feedback circuit
Automatic reset		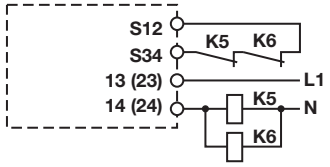
Manual/monitored reset	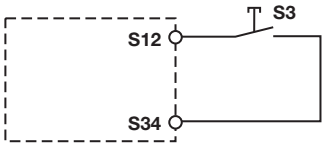	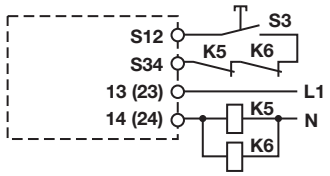

- Semiconductor output

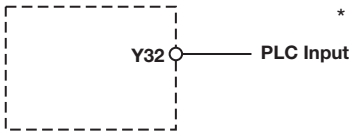

*Connect together the 0V connections on all the external power supplies

- Key

S1/S2	E-STOP/safety gate switch
S3	Reset button
	Switch operated
	Gate open
	Gate closed

Pilz GmbH & Co. KG, Felix-Wankel-Straße 2, 73760 Ostfildern, Germany
Telephone: +49 711 3409-0, Telefax: +49 711 3409-133, E-Mail: pilz.gmbh@pilz.de

Up to PL e of EN ISO 13849-1
PNOZ s3

Terminal configuration

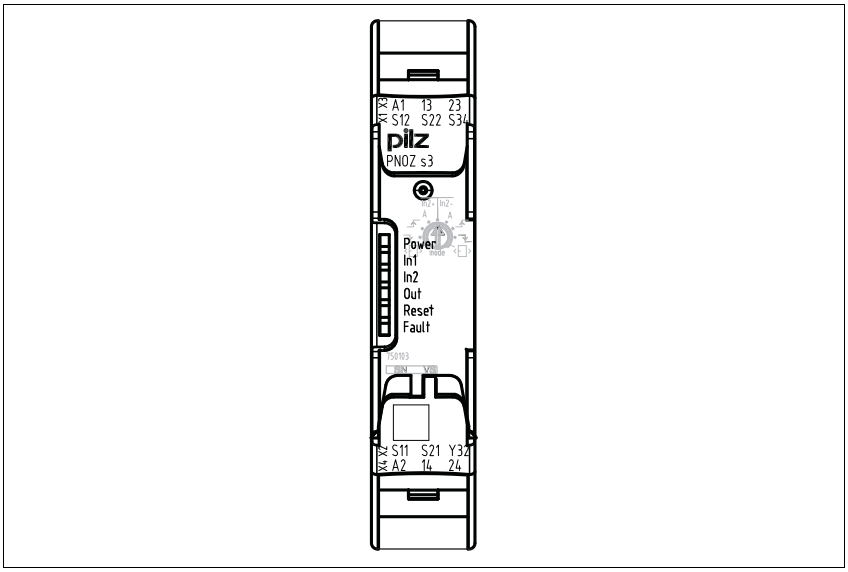

Installation

Install base unit without contact expander module:
- Ensure that the plug terminator is inserted at the side of the unit.

Connect base unit and PNOZsigma contact expander module:
- Remove the plug terminator at the side of the base unit and at the contact expander module.
- Connect the base unit and the contact expander module to the supplied connector before mounting the units to the DIN rail.

Installation in control cabinet
- The safety relay should be installed in a control cabinet with a protection type of at least IP54.
- Use the notch on the rear of the unit to attach it to a DIN rail (35 mm).
- When installed vertically: Secure the unit by using a fixing element (e.g. retaining brakket or end angle).
- Push the unit upwards or downwards before lifting it from the DIN rail.

Dimensions

*with spring-loaded terminals

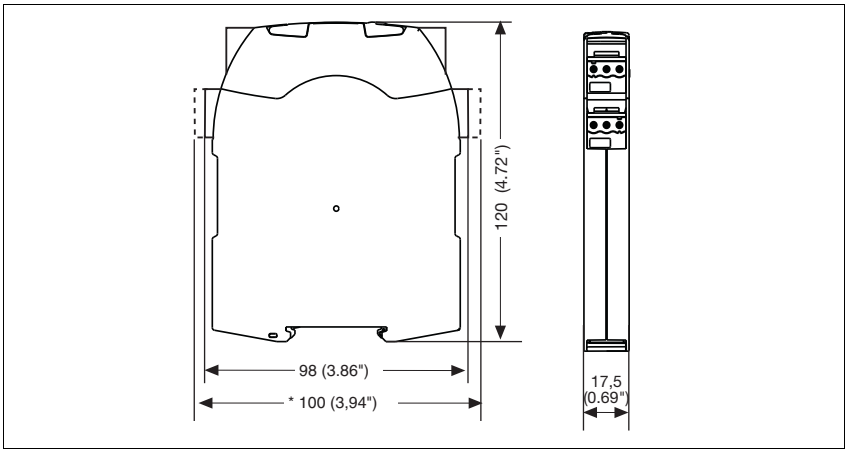

Up to PL e of EN ISO 13849-1
PNOZ s3

Notice

This data sheet is only intended for use during configuration. Please refer to the operating manual for installation and operation.

Service life graph

The service life graphs indicate the number of cycles from which failures due to wear must be expected. The wear is mainly caused by the electrical load; the mechanical load is negligible.

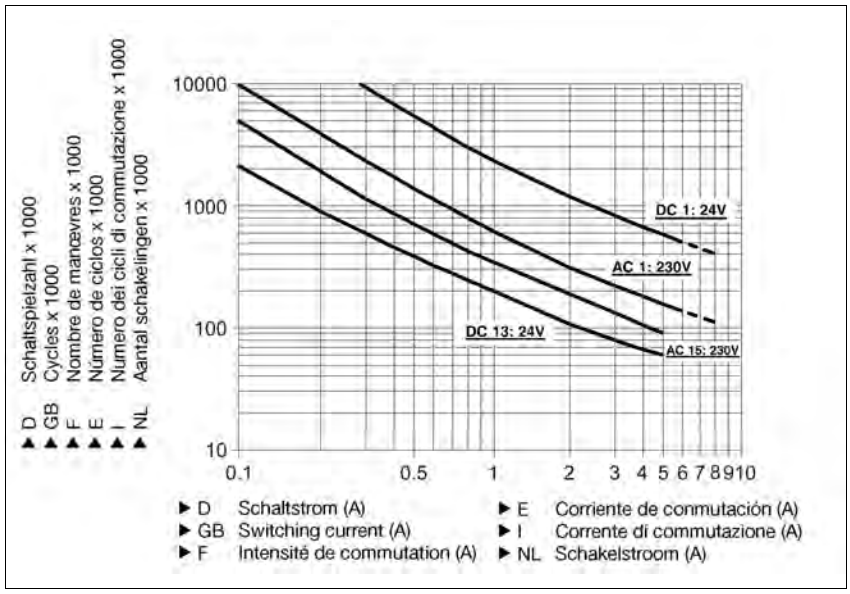

Example
- Inductive load: 0,2 A
- Utilisation category: AC15
- Contact service life: 2,000,000 cycles

Provided the application requires fewer than 2,000,000 cycles, the PFH value (see technical details) can be used in the calculation.

To increase the service life, sufficient spark suppression must be provided on all output contacts. With capacitive loads, any power surges that occur must be noted. With contactors, use freewheel diodes for spark suppression.

Technical details

Electrical data	
Supply voltage	
Supply voltage U_B DC	**24 V**
Voltage tolerance	**-15 %/+10 %**
Power consumption at U_B DC	**2.5 W**
Residual ripple DC	**20 %**
Voltage and current at	
Input circuit DC: **24.0 V**	**50.0 mA**
Reset circuit DC: **24.0 V**	**50.0 mA**
Feedback loop DC: **24.0 V**	**50.0 mA**
Number of output contacts	
Safety contacts (S) instantaneous:	**2**

Pilz GmbH & Co. KG, Felix-Wankel-Straße 2, 73760 Ostfildern, Germany
Telephone: +49 711 3409-0, Telefax: +49 711 3409-133, E-Mail: pilz.gmbh@pilz.de

Up to PL e of EN ISO 13849-1
PNOZ s3

Electrical data	
Utilisation category in accordance with **EN 60947-4-1**	
Safety contacts: AC1 at **240 V**	I_{min}: **0.01 A** , I_{max}: **6.0 A** P_{max}: **1500 VA**
Safety contacts: DC1 at **24 V**	I_{min}: **0.01 A** , I_{max}: **6.0 A** P_{max}: **150 W**
Utilisation category in accordance with **EN 60947-5-1**	
Safety contacts: AC15 at **230 V**	I_{max}: **5.0 A**
Safety contacts: DC13 at **24 V** (6 cycles/min)	I_{max}: **5.0 A**
Conventional thermal current	**6.0 A**
Contact material	**AgCuNi + 0.2 µm Au**
External contact fuse protection (I_K = 1 kA) to **EN 60947-5-1**	
Blow-out fuse, quick	
Safety contacts:	**10 A**
Blow-out fuse, slow	
Safety contacts:	**6 A**
Circuit breaker 24 VAC/DC, characteristic B/C	
Safety contacts:	**6 A**
Semiconductor outputs (short circuit proof)	**24.0 V** DC, **20 mA**
Max. overall cable resistance R_{lmax} input circuits, reset circuits	
single-channel at U_B DC	**30 Ohm**
dual-channel without detect. of shorts across contacts at U_B DC	**60 Ohm**
dual-channel with detect. of shorts across contacts at U_B DC	**30 Ohm**
Min. input resistance when switching on	**110 Ohm**
Safety-related characteristic data	
PL in accordance with **EN ISO 13849-1: 2006**	**PL e** (**Cat. 4**)
Category in accordance with **EN 954-1**	**Cat. 4**
SIL CL in accordance with **EN IEC 62061**	**SIL CL 3**
PFH in accordance with **EN IEC 62061**	**2.31E-09**
SIL in accordance with **IEC 61511**	**SIL 3**
PFD in accordance with **IEC 61511**	**2.03E-06**
T_M [year] in accordance with **EN ISO 13849-1: 2006**	**20**
Times	
Switch-on delay	
with automatic reset typ.	**170 ms**
with automatic reset max.	**300 ms**
with automatic reset after power on typ.	**350 ms**
with automatic reset after power on max.	**600 ms**
with manual reset typ.	**40 ms**
on monitored reset with rising edge typ.	**35 ms**
on monitored reset with rising edge max.	**50 ms**
on monitored reset with falling edge typ.	**55 ms**
on monitored reset with falling edge max.	**70 ms**
Delay-on de-energisation	
with E-STOP typ.	**10 ms**
with E-STOP max.	**20 ms**
with power failure typ.	**40 ms**
with power failure max.	**60 ms**
Recovery time at max. switching frequency 1/s	
after E-STOP	**100 ms**
after power failure	**100 ms**
Waiting period with a monitored reset	
with rising edge	**120 ms**
with falling edge	**250 ms**

Up to PL e of EN ISO 13849-1
PNOZ s3

Times	
Min. start pulse duration with a monitored reset	
with rising edge	**30 ms**
with falling edge	**100 ms**
Simultaneity, channel 1 and 2	∞
Supply interruption before de-energisation	**20 ms**
Environmental data	
EMC	**EN 60947-5-1**, **EN 61000-6-2**, **EN 61000-6-4**
Vibration to **EN 60068-2-6**	
Frequency	**10 - 55 Hz**
Amplitude	**0.35 mm**
Climatic suitability	**EN 60068-2-78**
Airgap creepage in accordance with **EN 60947-1**	
Pollution degree	**2**
Overvoltage category	**III / II**
Rated insulation voltage	**250 V**
Rated impulse withstand voltage	**4.00 kV**
Ambient temperature	**-10 - 55 °C**
Storage temperature	**-40 - 85 °C**
Protection type	
Mounting (e.g. cabinet)	**IP54**
Housing	**IP40**
Terminals	**IP20**
Mechanical data	
Housing material	
Housing	**PC**
Front	**PC**
Cross section of external conductors with screw terminals	
1 core flexible	**0.25 - 2.50 mm² , 24 - 12 AWG** No. 750103
2 core, same cross section, flexible:	
with crimp connectors, without insulating sleeve	**0.25 - 1.00 mm² , 24 - 16 AWG** No. 750103
without crimp connectors or with TWIN crimp connectors	**0.20 - 1.50 mm² , 24 - 16 AWG** No. 750103
Torque setting with screw terminals	**0.50 Nm** No. 750103
Cross section of external conductors with spring-loaded terminals: Flexible with/without crimp connectors	**0.20 - 2.50 mm² , 24 - 12 AWG** No. 751103
Spring-loaded terminals: Terminal points per connection	**2** No. 751103
Stripping length	**9 mm** No. 751103
Dimensions	
Height	**102.0 mm** No. 751103 **96.0 mm** No. 750103
Width	**17.5 mm**
Depth	**120.0 mm**
Weight	**140 g**

No. stands for order number.

It is essential to consider the relay's service life graphs. The relay outputs' safety-related characteristic data is only valid if the values in the service life graphs are met.

The PFH value depends on the switching frequency and the load on the relay output.
If the service life graphs are not accessible, the stated PFH value can be used irrespective of the switching frequency and the load, as the PFH value already considers the relay's B10d value as well as the failure rates of the other components.

All the units used within a safety function must be considered when calculating the safety characteristic data.

Pilz GmbH & Co. KG, Felix-Wankel-Straße 2, 73760 Ostfildern, Germany
Telephone: +49 711 3409-0, Telefax: +49 711 3409-133, E-Mail: pilz.gmbh@pilz.de

Up to PL e of EN ISO 13849-1
PNOZ s3

INFORMATION
A safety function's SIL/PL values are **not** identical to the SIL/PL values of the units that are used and may be different. We recommend that you use the PAScal software tool to calculate the safety function's SIL/PL values.

The standards current on **2006-04** apply.

Order reference

Type	Features		Terminals	Order no.
PNOZ s3		24 VDC	With screw terminals	750 103
PNOZ s3 C		24 VDC	With spring-loaded terminals	751 103

Up to PL e of EN ISO 13849-1
PNOZ s4



Safety relay for monitoring E-STOP pushbuttons, safety gates and light beam devices

Approvals

	PNOZ s4
c UL us LISTED	◆
TÜV	◆
CCC	◆

Unit features

- Positive-guided relay outputs:
  - 3 safety contacts (N/O), instantaneous
  - 1 auxiliary contact (N/C), instantaneous
- 1 semiconductor output
- Connection options for:
  - E-STOP pushbutton
  - Safety gate limit switch
  - Reset button
  - Light barriers
  - PSEN
- A connector can be used to connect 1 PNOZsigma contact expander module
- Operating modes can be set via rotary switch
- LED indicator for:
  - Supply voltage
  - Input status, channel 1
  - Input status, channel 2
  - Switch status, safety contacts
  - Reset circuit
  - Error
- Plug-in connection terminals (either spring-loaded terminal or screw terminal)

Unit description

The safety relay meets the requirements of EN 60947-5-1, EN 60204-1 and VDE 0113-1 and may be used in applications with

- E-STOP pushbuttons
- Safety gates
- Light beam devices

Safety features

The relay meets the following safety requirements:

- The circuit is redundant with built-in self-monitoring.
- The safety function remains effective in the case of a component failure.
- The correct opening and closing of the safety function relays is tested automatically in each on-off cycle.
- The unit has an electronic fuse.

Block diagram

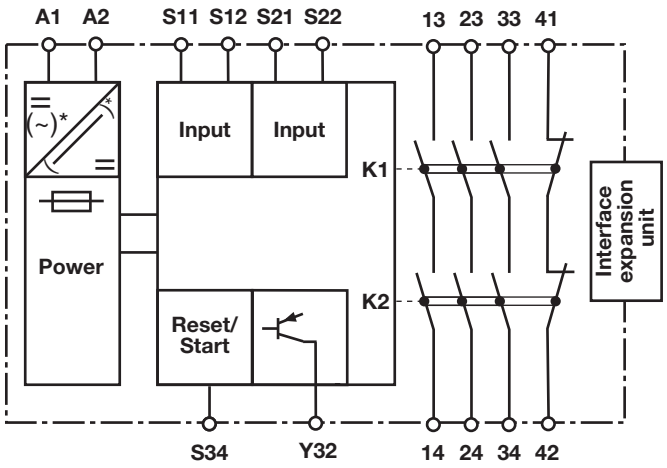

*only with U_B = 48 – 240 V AC/DC

Pilz GmbH & Co. KG, Felix-Wankel-Straße 2, 73760 Ostfildern, Germany
Telephone: +49 711 3409-0, Telefax: +49 711 3409-133, E-Mail: pilz.gmbh@pilz.de

Up to PL e of EN ISO 13849-1
PNOZ s4

Function description

- Single-channel operation: no redundancy in the input circuit, earth faults in the reset and input circuit are detected.
- Dual-channel operation without detection of shorts across contacts: redundant input circuit, detects
  - earth faults in the reset and input circuit,
  - short circuits in the input circuit and, with a monitored reset, in the reset circuit too.
- Dual-channel operation with detection of shorts across contacts: redundant input circuit, detects
  - earth faults in the reset and input circuit,
  - short circuits in the input circuit and, with a monitored reset, in the reset circuit too,
  - shorts between contacts in the input circuit.
- Automatic start: Unit is active once the input circuit has been closed.
- Manual reset: Unit is active once the input circuit is closed and then the reset circuit is closed.
- Monitored reset with falling edge: Unit is active once
  - the input circuit is closed and then the reset circuit is closed and opened again.
  - the reset circuit is closed and then opened again once the input circuit is closed.
- Monitored reset with rising edge: Unit is active once the input circuit is closed and once the reset circuit is closed after the waiting period has elapsed (see technical details).
- Reset with start-up test: The unit checks whether safety gates that are closed are opened and then closed again when supply voltage is applied.
- Increase in the number of available instantaneous safety contacts by connecting contact expander modules or external contactors/relays; A connector can be used to connect 1 PNOZsigma contact expander module.

Timing diagram

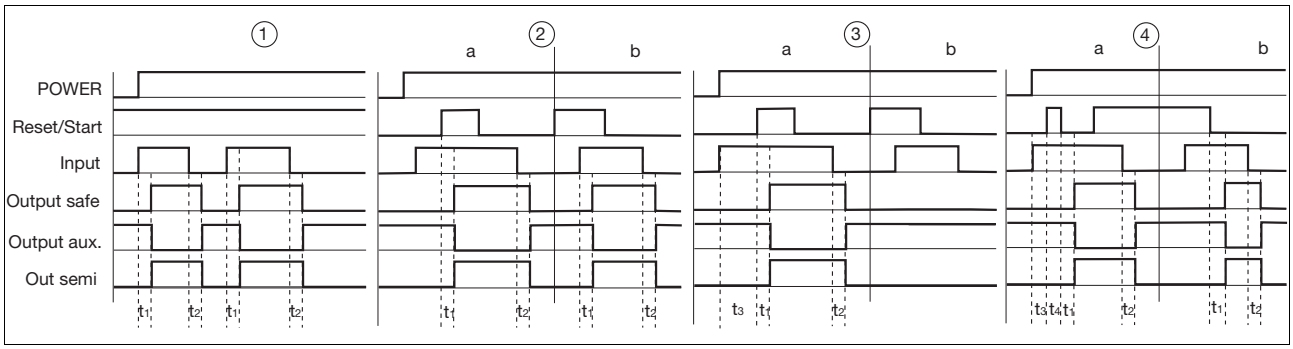

Key

- Power: Supply voltage
- Reset/start: Reset circuit S34 S34
- Input: Input circuits S11-S12, S21-S22
- Output safe: Safety contacts 13-14, 23-24, 33-34
- Output aux: Auxiliary contacts 41-42
- Out semi: Semiconductor output Y32
- ①: Automatic reset
- ②: Manual reset
- ③: Monitored reset with rising edge
- ④: Monitored reset with falling edge
- a: Input circuit closes before reset circuit
- b: Reset circuit closes before input circuit
- t_1: Switch-on delay
- t_2: Delay-on de-energisation
- t_3: Waiting period
- t_4: Waiting period reset circuit was closed

Wiring

Please note:

- Information given in the “Technical details” must be followed.
- Outputs 13-14, 23-24, 33-34 are safety contacts, output 41-42 is an auxiliary contact (e.g. for display).
- To prevent contact welding, a fuse should be connected before the output contacts (see technical details).
- Calculation of the max. cable runs I_{max} in the input circuit:

$$I_{max} = \frac{R_{lmax}}{R_l / km}$$

  R_{lmax} = max. overall cable resistance (see technical details)
  R_l /km = cable resistance/km
- Use copper wire that can withstand 60/75 °C.
- Sufficient fuse protection must be provided on all output contacts with capacitive and inductive loads.

Pilz GmbH & Co. KG, Felix-Wankel-Straße 2, 73760 Ostfildern, Germany
Telephone: +49 711 3409-0, Telefax: +49 711 3409-133, E-Mail: pilz.gmbh@pilz.de

Up to PL e of EN ISO 13849-1
PNOZ s4

Preparing for operation

- Supply voltage

Supply voltage	AC	DC
	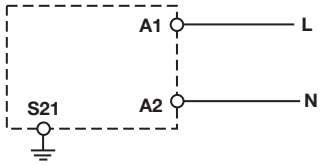	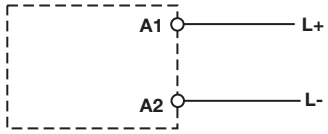

- Input circuit

Input circuit	Single-channel	Dual-channel
E-STOP **without** detection of shorts across contacts	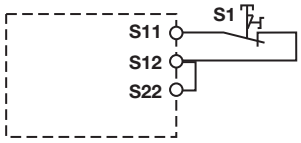	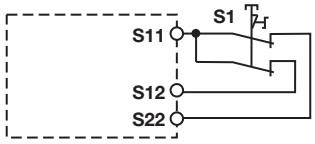
E-STOP **with** detection of shorts across contacts	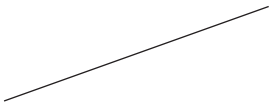	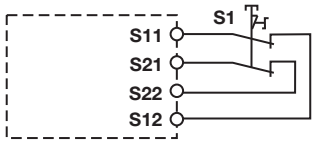
Safety gate **without** detection of shorts across contacts	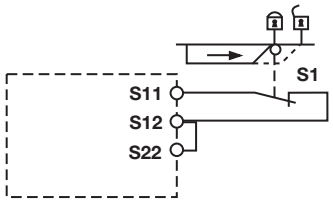	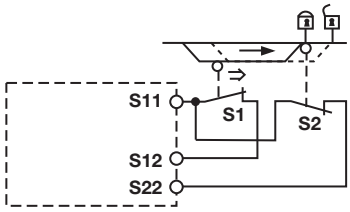
Safety gate **with** detection of shorts across contacts	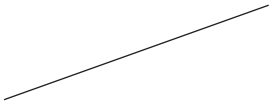	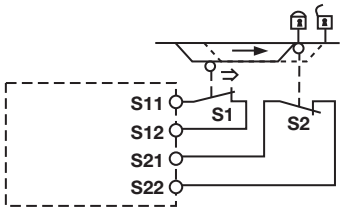
Light beam device or safety switch **with** detection of shorts across contacts via ESPE (only when U_B = 24 VDC)	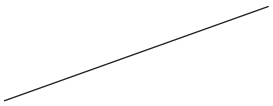	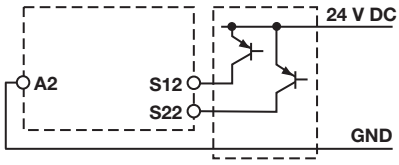

Pilz GmbH & Co. KG, Felix-Wankel-Straße 2, 73760 Ostfildern, Germany
Telephone: +49 711 3409-0, Telefax: +49 711 3409-133, E-Mail: pilz.gmbh@pilz.de

Up to PL e of EN ISO 13849-1
PNOZ s4

▸ Reset circuit/feedback loop

Reset circuit/feedback loop	Reset circuit	Feedback circuit
Automatic reset		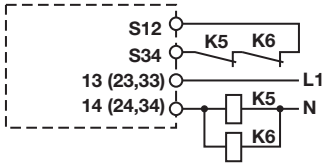
Manual/monitored reset	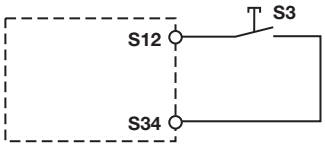	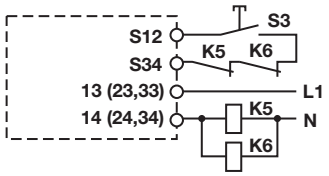

▸ Semiconductor output

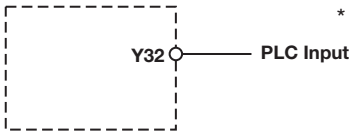

*Connect together the 0V connections on all the external power supplies

▸ Key

S1/S2	E-STOP/safety gate switch
S3	Reset button
	Switch operated
	Gate open
	Gate closed

Up to PL e of EN ISO 13849-1
PNOZ s4

Terminal configuration

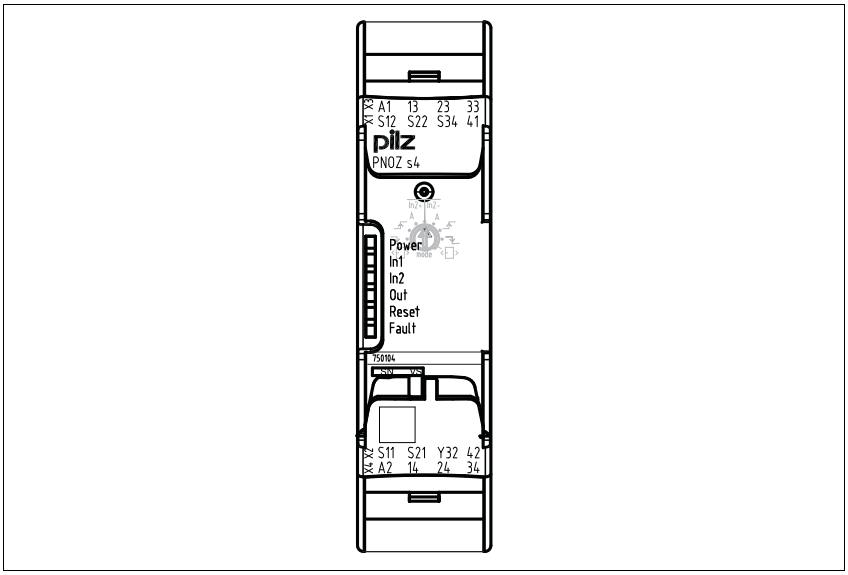

Installation

Install base unit without contact expander module:

- Ensure that the plug terminator is inserted at the side of the unit.

Connect base unit and PNOZsigma contact expander module:

- Remove the plug terminator at the side of the base unit and at the contact expander module.
- Connect the base unit and the contact expander module to the supplied connector before mounting the units to the DIN rail.

Installation in control cabinet

- The safety relay should be installed in a control cabinet with a protection type of at least IP54.
- Use the notch on the rear of the unit to attach it to a DIN rail (35 mm).
- When installed vertically: Secure the unit by using a fixing element (e.g. retaining brakket or end angle).
- Push the unit upwards or downwards before lifting it from the DIN rail.

Dimensions

*with spring-loaded terminals

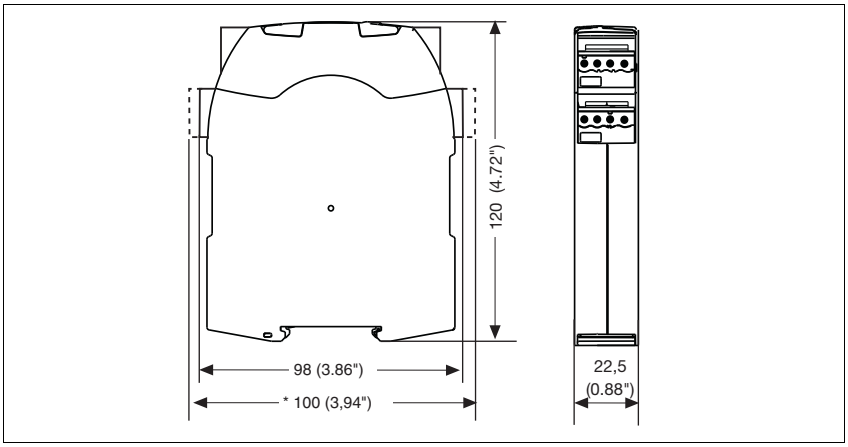

Pilz GmbH & Co. KG, Felix-Wankel-Straße 2, 73760 Ostfildern, Germany
Telephone: +49 711 3409-0, Telefax: +49 711 3409-133, E-Mail: pilz.gmbh@pilz.de
1001742-EN-04-2011-08

Up to PL e of EN ISO 13849-1
PNOZ s4

Notice

This data sheet is only intended for use during configuration. Please refer to the operating manual for installation and operation.

Service life graph

The service life graphs indicate the number of cycles from which failures due to wear must be expected. The wear is mainly caused by the electrical load; the mechanical load is negligible.

U_B 24 VDC

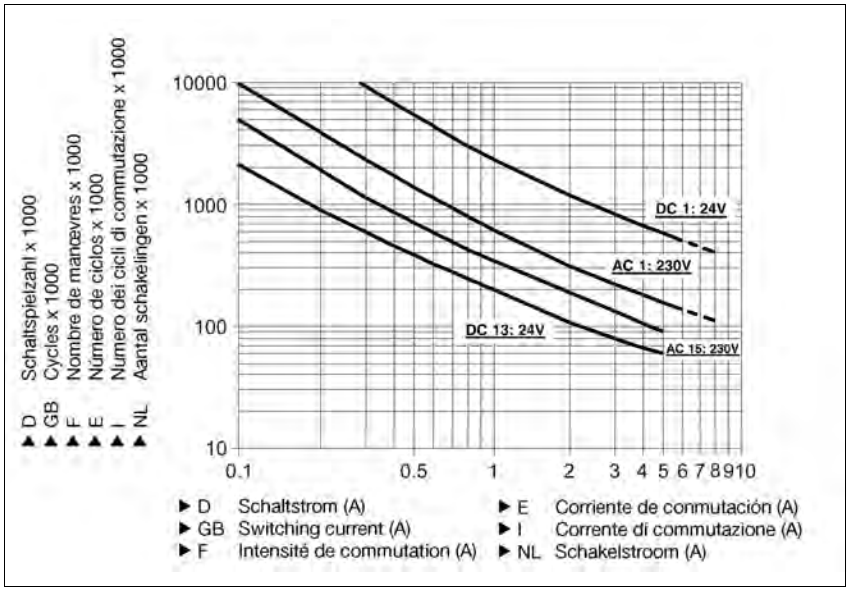

Example

- Inductive load: 0,2 A
- Utilisation category: AC15
- Contact service life: 2,000,000 cycles

Provided the application requires fewer than 2,000,000 cycles, the PFH value (see technical details) can be used in the calculation.
To increase the service life, sufficient spark suppression must be provided on all output contacts. With capacitive loads, any power surges that occur must be noted. With contactors, use freewheel diodes for spark suppression.

Up to PL e of EN ISO 13849-1
PNOZ s4

U_B 48-240 VAC/DC

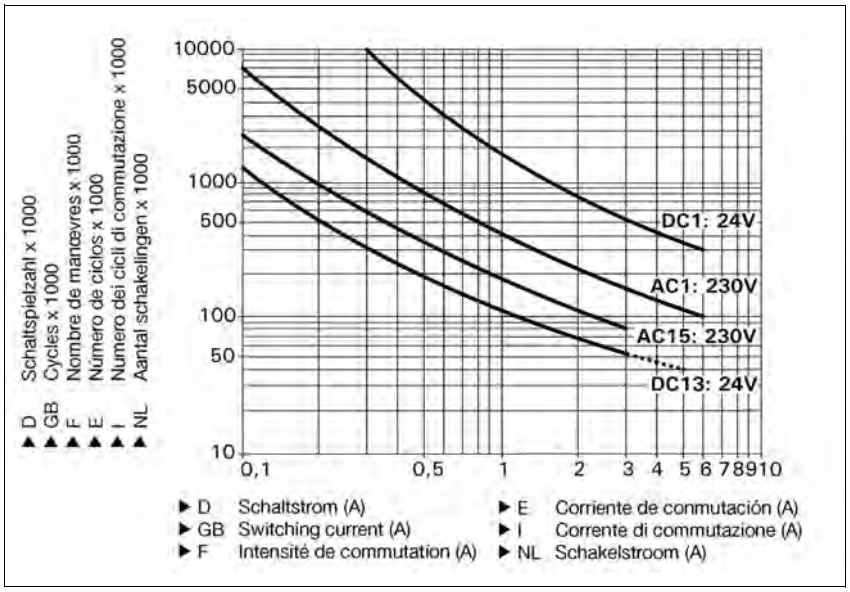

Example
- Inductive load: 0,2 A
- Utilisation category: AC15
- Contact service life: 1,000,000 cycles

Provided the application requires fewer than 1,000,000 cycles, the PFH value (see technical details) can be used in the calculation.

To increase the service life, sufficient spark suppression must be provided on all output contacts. With capacitive loads, any power surges that occur must be noted. With contactors, use freewheel diodes for spark suppression.

Technical details

Electrical data	
Supply voltage	
Supply voltage U_B DC	**24 V**
Supply voltage U_B AC/DC	**48 - 240 V**
Voltage tolerance	**-15 %/+10 %**
Power consumption at U_B AC	**5.0 VA** No. 750134, 751134
Power consumption at U_B DC	**2.5 W**
Frequency range AC	**50 - 60 Hz**
Residual ripple DC	**20 %, 160 %**
Voltage and current at	
Input circuit DC: **24.0 V**	**50.0 mA**
Reset circuit DC: **24.0 V**	**50.0 mA**
Feedback loop DC: **24.0 V**	**50.0 mA**
Number of output contacts	
Safety contacts (S) instantaneous:	**3**
Auxiliary contacts (N/C):	**1**

Pilz GmbH & Co. KG, Felix-Wankel-Straße 2, 73760 Ostfildern, Germany
Telephone: +49 711 3409-0, Telefax: +49 711 3409-133, E-Mail: pilz.gmbh@pilz.de

Up to PL e of EN ISO 13849-1
PNOZ s4

Electrical data	
Utilisation category in accordance with **EN 60947-4-1**	
Safety contacts: AC1 at **240 V**	I_{min}: **0.01 A** , I_{max}: **6.0 A** P_{max}: **1500 VA**
Safety contacts: DC1 at **24 V**	I_{min}: **0.01 A** , I_{max}: **6.0 A** P_{max}: **150 W**
Auxiliary contacts: AC1 at **240 V**	I_{min}: **0.01 A** , I_{max}: **6.0 A** P_{max}: **1500 VA**
Auxiliary contacts: DC1 at **24 V**	I_{min}: **0.01 A** , I_{max}: **6.0 A** P_{max}: **150 W**
Utilisation category in accordance with **EN 60947-5-1**	
Safety contacts: AC15 at **230 V**	I_{max}: **3.0 A** No. 750134, 751134 **5.0 A** No. 750104, 751104
Safety contacts: DC13 at **24 V** (6 cycles/min)	I_{max}: **4.0 A** No. 750134, 751134 **5.0 A** No. 750104, 751104
Auxiliary contacts: AC15 at **230 V**	I_{max}: **3.0 A** No. 750134, 751134 **5.0 A** No. 750104, 751104
Auxiliary contacts: DC13 at **24 V** (6 cycles/min)	I_{max}: **4.0 A** No. 750134, 751134 **5.0 A** No. 750104, 751104
Contact material	**AgCuNi + 0.2 µm Au**
External contact fuse protection (I_K = 1 kA) to **EN 60947-5-1**	
Blow-out fuse, quick	
Safety contacts:	**10 A** No. 750104, 751104 **6 A** No. 750134, 751134
Auxiliary contacts:	**10 A** No. 750104, 751104 **6 A** No. 750134, 751134
Blow-out fuse, slow	
Safety contacts:	**4 A** No. 750134, 751134 **6 A** No. 750104, 751104
Auxiliary contacts:	**4 A** No. 750134, 751134 **6 A** No. 750104, 751104
Circuit breaker 24 VAC/DC, characteristic B/C	
Safety contacts:	**4 A** No. 750134, 751134 **6 A** No. 750104, 751104
Auxiliary contacts:	**4 A** No. 750134, 751134 **6 A** No. 750104, 751104
Semiconductor outputs (short circuit proof)	**24.0 V** DC, **20 mA**
Max. overall cable resistance R_{lmax} input circuits, reset circuits	
single-channel at U_B DC	**30 Ohm**
single-channel at U_B AC	**30 Ohm** No. 750134, 751134
dual-channel without detect. of shorts across contacts at U_B DC	**30 Ohm** No. 750134, 751134 **60 Ohm** No. 750104, 751104
dual-channel without detect. of shorts across contacts at U_B AC	**30 Ohm** No. 750134, 751134
dual-channel with detect. of shorts across contacts at U_B DC	**30 Ohm**
dual-channel with detect. of shorts across contacts at U_B AC	**30 Ohm** No. 750134, 751134
Min. input resistance when switching on	**110 Ohm**
Safety-related characteristic data	
PL in accordance with **EN ISO 13849-1: 2006**	**PL e** (**Cat. 4**)
Category in accordance with **EN 954-1**	**Cat. 4**
SIL CL in accordance with **EN IEC 62061**	**SIL CL 3**
PFH in accordance with **EN IEC 62061**	**2.31E-09**
SIL in accordance with **IEC 61511**	**SIL 3**
PFD in accordance with **IEC 61511**	**2.03E-06**
T_M [year] in accordance with **EN ISO 13849-1: 2006**	**20**

Up to PL e of EN ISO 13849-1
PNOZ s4

Times	
Switch-on delay	
with automatic reset typ.	**170 ms**
with automatic reset max.	**300 ms**
with automatic reset after power on typ.	**350 ms**
with automatic reset after power on max.	**600 ms**
with manual reset typ.	**40 ms**
on monitored reset with rising edge typ.	**35 ms**
on monitored reset with rising edge max.	**50 ms**
on monitored reset with falling edge typ.	**55 ms**
on monitored reset with falling edge max.	**70 ms**
Delay-on de-energisation	
with E-STOP typ.	**10 ms**
with E-STOP max.	**20 ms**
with power failure typ.	**40 ms**
with power failure max.	**80 ms**
Recovery time at max. switching frequency 1/s	
after E-STOP	**100 ms** No. 750104, 751104 **50 ms** No. 750134, 751134
after power failure	**100 ms**
Waiting period with a monitored reset	
with rising edge	**120 ms**
with falling edge	**150 ms** No. 750134, 751134 **250 ms** No. 750104, 751104
Min. start pulse duration with a monitored reset	
with rising edge	**30 ms**
with falling edge	**100 ms**
Simultaneity, channel 1 and 2	∞
Supply interruption before de-energisation	**20 ms**
Environmental data	
EMC	**EN 60947-5-1**, **EN 61000-6-2**, **EN 61000-6-4**
Vibration to **EN 60068-2-6**	
Frequency	**10 - 55 Hz**
Amplitude	**0.35 mm**
Climatic suitability	**EN 60068-2-78**
Airgap creepage in accordance with **EN 60947-1**	
Pollution degree	**2**
Overvoltage category	**III / II**
Rated insulation voltage	**250 V**
Rated impulse withstand voltage	**4.00 kV**
Ambient temperature	**-10 - 55 °C**
Storage temperature	**-40 - 85 °C**
Protection type	
Mounting (e.g. cabinet)	**IP54**
Housing	**IP40**
Terminals	**IP20**
Mechanical data	
Housing material	
Housing	**PC**
Front	**PC**
Cross section of external conductors with screw terminals	
1 core flexible	**0.25 - 2.50 mm² , 24 - 12 AWG** No. 750104, 750134
2 core, same cross section, flexible:	
with crimp connectors, without insulating sleeve	**0.25 - 1.00 mm² , 24 - 16 AWG** No. 750104, 750134
without crimp connectors or with TWIN crimp connectors	**0.20 - 1.50 mm² , 24 - 16 AWG** No. 750104, 750134
Torque setting with screw terminals	**0.50 Nm** No. 750104, 750134
Cross section of external conductors with spring-loaded terminals: Flexible with/without crimp connectors	**0.20 - 2.50 mm² , 24 - 12 AWG** No. 751104, 751134

Pilz GmbH & Co. KG, Felix-Wankel-Straße 2, 73760 Ostfildern, Germany
Telephone: +49 711 3409-0, Telefax: +49 711 3409-133, E-Mail: pilz.gmbh@pilz.de

Up to PL e of EN ISO 13849-1
PNOZ s4

Mechanical data	
Spring-loaded terminals: Terminal points per connection	**2** No. 751104, 751134
Stripping length	**9 mm** No. 751104, 751134
Dimensions	
Height	**102.0 mm** No. 751104, 751134 **96.0 mm** No. 750104, 750134
Width	**22.5 mm**
Depth	**120.0 mm**
Weight	**190 g** No. 7501040, 751104 **210 g** No. 751134, 750134

No. stands for order number.

It is essential to consider the relay's service life graphs. The relay outputs' safety-related characteristic data is only valid if the values in the service life graphs are met.

The PFH value depends on the switching frequency and the load on the relay output.
If the service life graphs are not accessible, the stated PFH value can be used irrespective of the switching frequency and the load, as the PFH value already considers the relay's B10d value as well as the failure rates of the other components.

All the units used within a safety function must be considered when calculating the safety characteristic data.

INFORMATION
A safety function's SIL/PL values are **not** identical to the SIL/PL values of the units that are used and may be different. We recommend that you use the PAScal software tool to calculate the safety function's SIL/PL values.

The standards current on **2006-04** apply.

Conventional thermal current while loading several contacts

Number of contacts	I_{th} per contact at U_B DC	I_{th} at U_B AC
1	**6.00 A**	**6.00 A** No. 750134, 751134
2	**6.00 A**	**6.00 A** No. 750134, 751134
3	**4.50 A** No. 750134, 751134 **5.00 A** No. 750104, 751104	**4.50 A** No. 750134, 751134

Order reference

Type	Features		Terminals	Order no.
PNOZ s4		24 VDC	With screw terminals	750 104
PNOZ s4 C		24 VDC	With spring-loaded terminals	751 104
PNOZ s4	48 – 240 VAC/DC		With screw terminals	750 134
PNOZ s4 C	48 – 240 VAC/DC		With spring-loaded terminals	751 134

Pilz GmbH & Co. KG, Felix-Wankel-Straße 2, 73760 Ostfildern, Germany
Telephone: +49 711 3409-0, Telefax: +49 711 3409-133, E-Mail: pilz.gmbh@pilz.de

Up to PL e of EN ISO 13849-1
PNOZ s4.1



Safety relay suitable for use on burner managements systems to monitor E-STOP pushbuttons, safety gates and light beam devices

Approvals

	PNOZ s4.1
c UL us LISTED	◆
TÜV SÜD	◆
CCC	◆

Unit features

- Positive-guided relay outputs:
  - 3 safety contacts (N/O), instantaneous
  - 1 auxiliary contact (N/C), instantaneous
- 1 semiconductor output
- Connection options for:
  - E-STOP pushbutton
  - Safety gate limit switch
  - Reset button
  - Light beam devices
  - PSEN
  - Safety valves for furnaces
- A connector can be used to connect 1 PNOZsigma contact expansion module
  Operating modes can be set via rotary switch
- LED for:
  - Supply voltage
  - Input status, channel 1
  - Input status, channel 2
  - Switch status, safety contacts
  - Reset circuit
  - Error
- Plug-in connection terminals (either spring-loaded terminal or screw terminal)

Unit description

The safety relay meets the requirements of EN 60947-5-1, EN 60204-1 and VDE 0113-1 and may be used in applications with

- E-STOP pushbuttons
- Safety gates
- Light beam devices

It is designed for use in furnaces in accordance with EN 50156-1.

Safety features

The relay meets the following safety requirements:

- The circuit is redundant with built-in self-monitoring.
- The safety function remains effective in the case of a component failure.
- The correct opening and closing of the safety function relays is tested automatically in each on-off cycle.
- The unit has an electronic fuse.

Block diagram

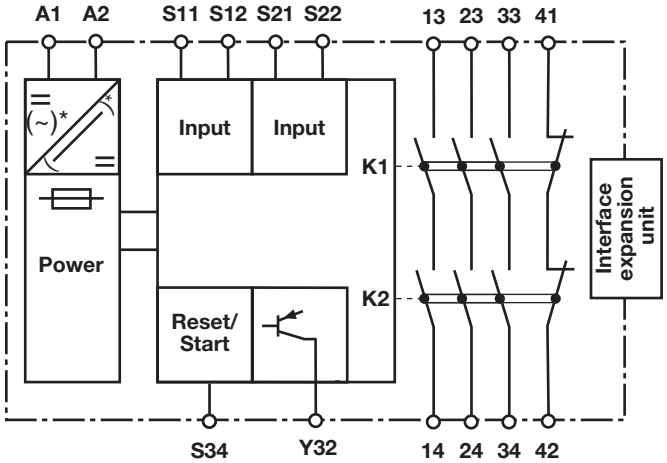

*only when U_B = 48 – 240 V AC/DC

Pilz GmbH & Co. KG, Felix-Wankel-Straße 2, 73760 Ostfildern, Germany
Telephone: +49 711 3409-0, Telefax: +49 711 3409-133, E-Mail: pilz.gmbh@pilz.de

1001746-EN-02-2011-11

Up to PL e of EN ISO 13849-1
PNOZ s4.1

Function description

- Single-channel operation: no redundancy in the input circuit, earth faults in the reset and input circuit are detected.
- Dual-channel operation without detection of shorts across contacts: redundant input circuit, detects
  - earth faults in the reset and input circuit,
  - short circuits in the input circuit and, with a monitored reset, in the reset circuit too.
- Dual-channel operation with detection of shorts across contacts: redundant input circuit, detects
  - earth faults in the reset and input circuit,
  - short circuits in the input circuit and, with a monitored reset, in the reset circuit too,
  - shorts between contacts in the input circuit.
- Automatic start: Unit is active once the input circuit has been closed.
- Manual reset: Unit is active once the input circuit is closed and then the reset circuit is closed.
- Monitored reset with falling edge: Unit is active once
  - the input circuit is closed and then the reset circuit is closed and opened again.
  - the reset circuit is closed and then opened again once the input circuit is closed.
- Monitored reset with rising edge: Unit is active once the input circuit is closed and once the reset circuit is closed after the waiting period has elapsed (see technical details).
- Reset with start-up test: The unit checks whether safety gates that are closed are opened and then closed again when supply voltage is applied.
- Increase in the number of available instantaneous safety contacts by connecting contact expander modules or external contactors/relays; A connector can be used to connect 1 PNOZsigma contact expander module.

2.3

Timing diagram

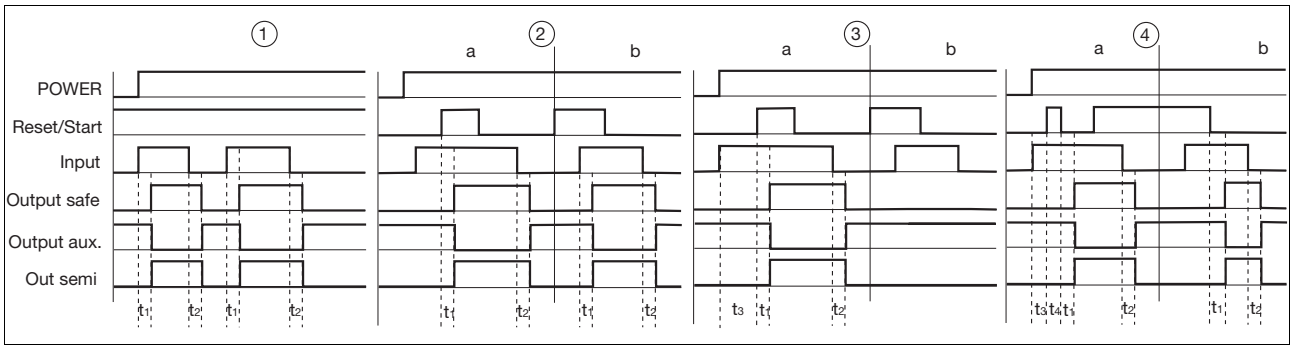

Key

- Power: Supply voltage
- Reset/start: Reset circuit S34 S34
- Input: Input circuits S11-S12, S21-S22
- Output safe: Safety contacts 13-14, 23-24, 33-34
- Output aux: Auxiliary contacts 41-42
- Out semi: Semiconductor output Y32
- ①: Automatic reset
- ②: Manual reset
- ③: Monitored reset with rising edge
- ④: Monitored reset with falling edge
- a: Input circuit closes before reset circuit
- b: Reset circuit closes before input circuit
- t_1: Switch-on delay
- t_2: Delay-on de-energisation
- t_3: Waiting period
- t_4: Waiting period reset circuit was closed

Wiring

Please note:

- Information given in the “Technical details” must be followed.
- Outputs 13-14, 23-24, 33-34 are safety contacts, output 41-42 is an auxiliary contact (e.g. for display).
- To prevent contact welding, a fuse should be connected before the output contacts (see technical details).
- Calculation of the max. cable runs l_{max} in the input circuit:

$$l_{max} = \frac{R_{lmax}}{R_l / km}$$

R_{lmax} = max. overall cable resistance (see technical details)
R_l /km = cable resistance/km

- Use copper wire that can withstand 60/75 °C.
- Sufficient fuse protection must be provided on all output contacts with capacitive and inductive loads.

Up to PL e of EN ISO 13849-1
PNOZ s4.1

Preparing for operation

- Supply voltage

Supply voltage	AC	DC
	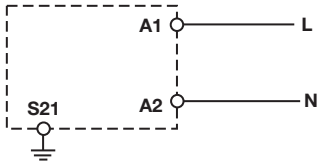	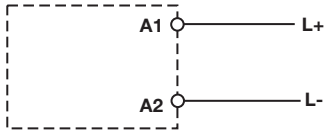

- Input circuit

Input circuit	Single-channel	Dual-channel
E-STOP **without** detection of shorts across contacts	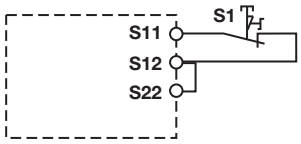	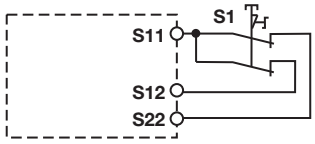
E-STOP **with** detection of shorts across contacts	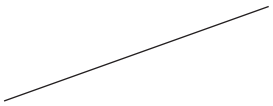	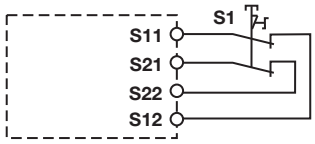
Safety gate **without** detection of shorts across contacts	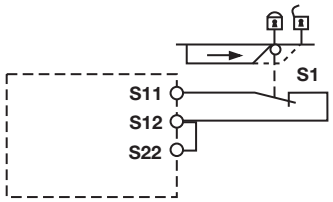	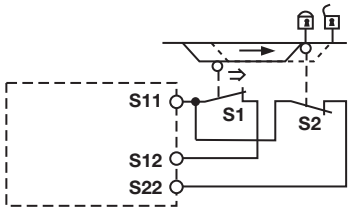
Safety gate **with** detection of shorts across contacts	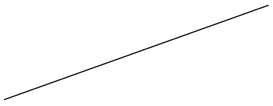	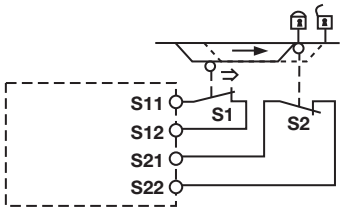
Light beam device or safety switch **with** detection of shorts across contacts via ESPE (only when U_B = 24 VDC)	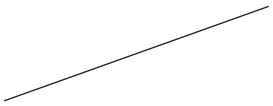	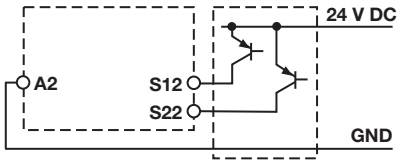

Pilz GmbH & Co. KG, Felix-Wankel-Straße 2, 73760 Ostfildern, Germany
Telephone: +49 711 3409-0, Telefax: +49 711 3409-133, E-Mail: pilz.gmbh@pilz.de

Up to PL e of EN ISO 13849-1
PNOZ s4.1

- Reset circuit/feedback loop

Reset circuit/feedback loop	Reset circuit	Feedback circuit
Automatic reset		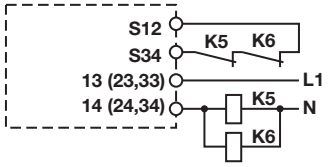
Manual/monitored reset	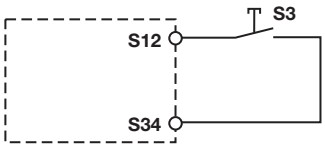	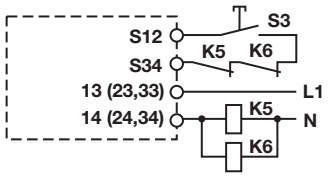

- Semiconductor output

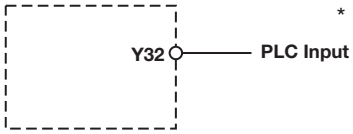

*Connect together the 0V connections on all the external power supplies

- Key

S1/S2	E-STOP/safety gate switch
S3	Reset button
	Switch operated
	Gate open
	Gate closed

INFORMATION
If a base unit and a contact expansion module from the PNOZsigma range are linked via the connector, no additional wiring is necessary.

Up to PL e of EN ISO 13849-1
PNOZ s4.1

Terminal configuration

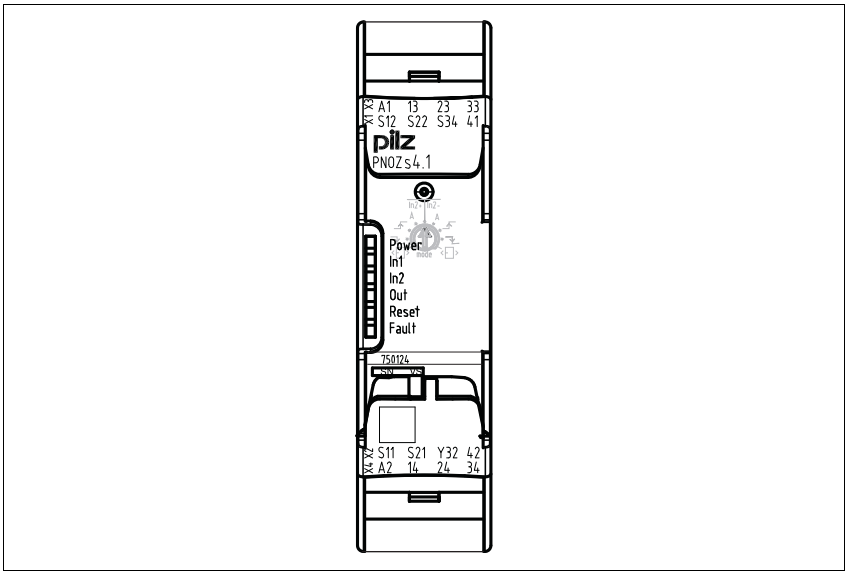

Installation

Install base unit without contact expander module:

- Ensure that the plug terminator is inserted at the side of the unit.

Connect base unit and PNOZsigma contact expander module:

- Remove the plug terminator at the side of the base unit and at the contact expander module.
- Connect the base unit and the contact expander module to the supplied connector before mounting the units to the DIN rail.

Installation in control cabinet

- The safety relay should be installed in a control cabinet with a protection type of at least IP54.
- Use the notch on the rear of the unit to attach it to a DIN rail (35 mm).
- When installed vertically: Secure the unit by using a fixing element (e.g. retaining brakket or end angle).
- Push the unit upwards or downwards before lifting it from the DIN rail.

Dimensions

*with spring-loaded terminals

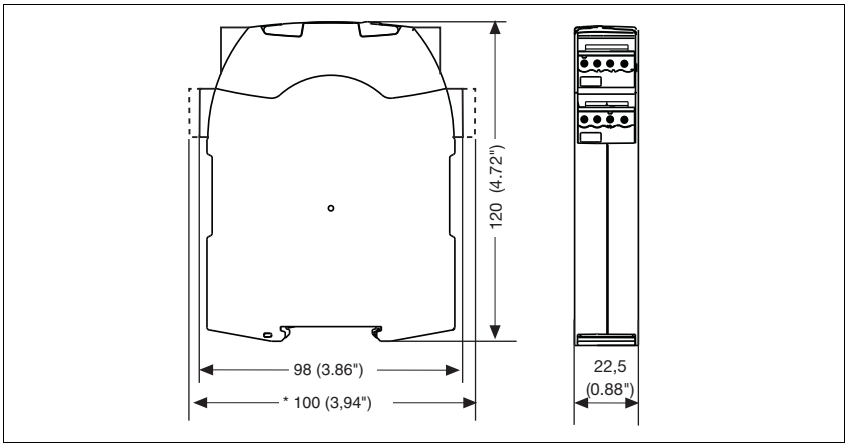

Pilz GmbH & Co. KG, Felix-Wankel-Straße 2, 73760 Ostfildern, Germany
Telephone: +49 711 3409-0, Telefax: +49 711 3409-133, E-Mail: pilz.gmbh@pilz.de
1001746-EN-02-2011-11

Up to PL e of EN ISO 13849-1
PNOZ s4.1

Notice

This data sheet is only intended for use during configuration. Please refer to the operating manual for installation and operation.

Service life graph

The service life graphs indicate the number of cycles from which failures due to wear must be expected. The wear is mainly caused by the electrical load; the mechanical load is negligible.

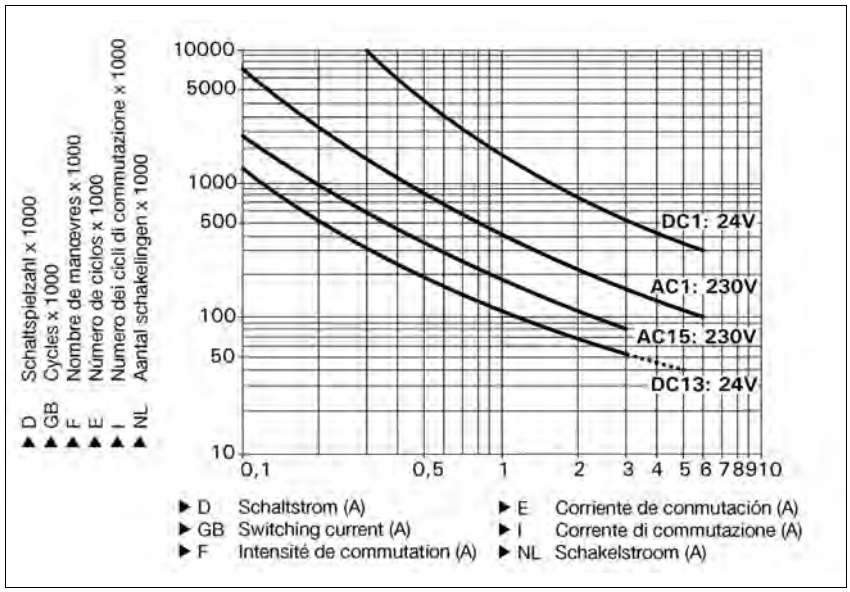

Example
- Inductive load: 0,2 A
- Utilisation category: AC15
- Contact service life: 1,000,000 cycles

Provided the application requires fewer than 1,000,000 cycles, the PFH value (see technical details) can be used in the calculation.

To increase the service life, sufficient spark suppression must be provided on all output contacts. With capacitive loads, any power surges that occur must be noted. With contactors, use freewheel diodes for spark suppression.

Technical details

Electrical data	
Supply voltage	
Supply voltage U_B DC	**24 V**
Supply voltage U_B AC/DC	**48 - 240 V**
Voltage tolerance	**-15 %/+10 %**
Power consumption at U_B AC	**5.0 VA** No. 750154, 751154
Power consumption at U_B DC	**2.5 W**
Frequency range AC	**50 - 60 Hz**
Residual ripple DC	**20 %**, **160 %**
Voltage and current at	
Input circuit DC: **24.0 V**	**50.0 mA**
Reset circuit DC: **24.0 V**	**50.0 mA**
Feedback loop DC: **24.0 V**	**50.0 mA**

Up to PL e of EN ISO 13849-1
PNOZ s4.1

Electrical data	
Number of output contacts	
Safety contacts (S) instantaneous:	**3**
Auxiliary contacts (N/C):	**1**
Utilisation category in accordance with **EN 60947-4-1**	
Safety contacts: AC1 at **240 V**	I_{min}: **0.01 A** , I_{max}: **1.5 A** P_{max}: **375 VA**
Safety contacts: DC1 at **24 V**	I_{min}: **0.01 A** , I_{max}: **6.0 A** P_{max}: **150 W**
Auxiliary contacts: AC1 at **240 V**	I_{min}: **0.01 A** , I_{max}: **1.5 A** P_{max}: **375 VA**
Auxiliary contacts: DC1 at **24 V**	I_{min}: **0.01 A** , I_{max}: **6.0 A** P_{max}: **150 W**
Utilisation category in accordance with **EN 60947-5-1**	
Safety contacts: AC15 at **230 V**	I_{max}: **0.6 A**
Safety contacts: DC13 at **24 V** (6 cycles/min)	I_{max}: **0.4 A**
Auxiliary contacts: AC15 at **230 V**	I_{max}: **0.6 A**
Auxiliary contacts: DC13 at **24 V** (6 cycles/min)	I_{max}: **0.4 A**
Contact material	**AgCuNi + 0.2 µm Au**
External contact fuse protection (I_K = 1 kA) to **EN 60947-5-1**	
Blow-out fuse, quick	
Safety contacts:	**6 A**
Auxiliary contacts:	**6 A**
Blow-out fuse, slow	
Safety contacts:	**4 A**
Auxiliary contacts:	**4 A**
Circuit breaker 24 VAC/DC, characteristic B/C	
Safety contacts:	**4 A**
Auxiliary contacts:	**4 A**
Semiconductor outputs (short circuit proof)	**24.0 V** DC, **20 mA**
Max. overall cable resistance R_{lmax} input circuits, reset circuits	
single-channel at U_B DC	**30 Ohm**
single-channel at U_B AC	**30 Ohm** No. 750154, 751154
dual-channel without detect. of shorts across contacts at U_B DC	**60 Ohm**
dual-channel without detect. of shorts across contacts at U_B AC	**60 Ohm** No. 750154, 751154
dual-channel with detect. of shorts across contacts at U_B DC	**30 Ohm**
dual-channel with detect. of shorts across contacts at U_B AC	**30 Ohm** No. 750154, 751154
Safety-related characteristic data	
PL in accordance with **EN ISO 13849-1: 2006**	**PL e** (**Cat. 4**)
Category in accordance with **EN 954-1**	**Cat. 4**
SIL CL in accordance with **EN IEC 62061**	**SIL CL 3**
PFH in accordance with **EN IEC 62061**	**2.31E-09**
SIL in accordance with **IEC 61511**	**SIL 3**
PFD in accordance with **IEC 61511**	**2.03E-06**
T_M [year] in accordance with **EN ISO 13849-1: 2006**	**20**
Times	
Switch-on delay	
with automatic reset typ.	**170 ms**
with automatic reset max.	**300 ms**
with automatic reset after power on typ.	**350 ms**
with automatic reset after power on max.	**600 ms**
with manual reset typ.	**40 ms**
with manual reset max.	**300 ms**
on monitored reset with rising edge typ.	**35 ms**
on monitored reset with rising edge max.	**50 ms**
on monitored reset with falling edge typ.	**55 ms**
on monitored reset with falling edge max.	**70 ms**

Pilz GmbH & Co. KG, Felix-Wankel-Straße 2, 73760 Ostfildern, Germany
Telephone: +49 711 3409-0, Telefax: +49 711 3409-133, E-Mail: pilz.gmbh@pilz.de

Up to PL e of EN ISO 13849-1
PNOZ s4.1

Times	
Delay-on de-energisation	
with E-STOP typ.	**10 ms**
with E-STOP max.	**20 ms**
with power failure typ.	**40 ms**
with power failure max.	**80 ms**
Recovery time at max. switching frequency 1/s	
after E-STOP	**50 ms**
after power failure	**100 ms**
Waiting period with a monitored reset	
with rising edge	**120 ms**
with falling edge	**150 ms** No. 750154, 751154 **250 ms** No. 750124, 751124
Min. start pulse duration with a monitored reset	
with rising edge	**30 ms**
with falling edge	**100 ms**
Simultaneity, channel 1 and 2	∞
Supply interruption before de-energisation	**20 ms**
Environmental data	
EMC	**EN 60947-5-1**, **EN 61000-6-2**, **EN 61000-6-4**
Vibration to **EN 60068-2-6**	
Frequency	**10 - 150 Hz**
Amplitude	**0.35 mm**
Climatic suitability	**EN 60068-2-78**
Airgap creepage in accordance with **EN 60947-1**	
Pollution degree	**2**
Overvoltage category	**III**
Rated insulation voltage	**250 V**
Rated impulse withstand voltage	**4.00 kV**
Ambient temperature	**-10 - 60 °C**
Storage temperature	**-40 - 85 °C**
Protection type	
Mounting (e.g. cabinet)	**IP54**
Housing	**IP40**
Terminals	**IP20**
Mechanical data	
Housing material	
Housing	**PC**
Front	**PC**
Cross section of external conductors with screw terminals	
1 core flexible	**0.25 - 2.50 mm² , 24 - 12 AWG** No. 750124, 750154
2 core, same cross section, flexible:	
with crimp connectors, without insulating sleeve	**0.25 - 1.00 mm² , 24 - 16 AWG** No. 750124, 750154
without crimp connectors or with TWIN crimp connectors	**0.20 - 1.50 mm² , 24 - 16 AWG** No. 750124, 750154
Torque setting with screw terminals	**0.50 Nm** No. 750124, 750154
Cross section of external conductors with spring-loaded terminals: Flexible with/without crimp connectors	**0.20 - 2.50 mm² , 24 - 12 AWG** No. 751124, 751154
Spring-loaded terminals: Terminal points per connection	**2** No. 751124, 751154
Stripping length	**9 mm** No. 751124, 751154
Dimensions	
Height	**102.0 mm** No. 751124, 751154 **96.0 mm** No. 750124, 750154
Width	**22.5 mm**
Depth	**120.0 mm**
Weight	**190 g** No. 750124, 751124 **210 g** No. 750154, 751154

No. stands for order number.

Up to PL e of EN ISO 13849-1
PNOZ s4.1

It is essential to consider the relay's service life graphs. The relay outputs' safety-related characteristic data is only valid if the values in the service life graphs are met.

The PFH value depends on the switching frequency and the load on the relay output.
If the service life graphs are not accessible, the stated PFH value can be used irrespective of the switching frequency and the load, as the PFH value already considers the relay's B10d value as well as the failure rates of the other components.

All the units used within a safety function must be considered when calculating the safety characteristic data.

INFORMATION
A safety function's SIL/PL values are **not** identical to the SIL/PL values of the units that are used and may be different. We recommend that you use the PAScal software tool to calculate the safety function's SIL/PL values.

The standards current on **2008-04** apply.

Conventional thermal current while loading several contacts

Number of contacts	I_{th} per contact at U_B DC	I_{th} at U_B AC
1	**6.00 A**	**6.00 A** No. 750154, 751154
2	**6.00 A**	**6.00 A** No. 750154, 751154
3	**4.50 A**	**4.50 A** No. 750154, 751154

Order reference

Type	Features		Terminals	Order no.
PNOZ s4.1		24 V DC	with screw terminals	750 124
PNOZ s4.1 C		24 V DC	with spring-loaded terminals	751 124
PNOZ s4.1	48 - 240 V AC/DC		with screw terminals	750 154
PNOZ s4.1 C	48 - 240 V AC/DC		with spring-loaded terminals	751 154

Pilz GmbH & Co. KG, Felix-Wankel-Straße 2, 73760 Ostfildern, Germany
Telephone: +49 711 3409-0, Telefax: +49 711 3409-133, E-Mail: pilz.gmbh@pilz.de

Up to PL e of EN ISO 13849-1
PNOZ s5



Safety relay for monitoring E-STOP pushbuttons, safety gates and light beam devices

Approvals

	PNOZ s5
c UL us LISTED	◆
TÜV SÜD	◆
CCC	◆

Unit features

- Positive-guided relay outputs:
  - 2 safety contacts (N/O), instantaneous
  - 2 safety contacts (N/O), delay-on de-energisation
- 1 semiconductor output
- Connection options for:
  - E-STOP pushbutton
  - Safety gate limit switch
  - Reset button
  - Light barriers
  - PSEN
- A connector can be used to connect 1 PNOZsigma contact expander module
- Delay-on de-energisation selectable
- Operating modes and delay times can be selected via rotary switches
- LED indicator for:
  - Supply voltage
  - Input status, channel 1
  - Input status, channel 2
  - Switch status channel 1/2
  - Reset circuit
  - Error
- Plug-in connection terminals (either spring-loaded terminal or screw terminal)
- See order reference for unit types

Unit description

The safety relay meets the requirements of EN 60947-5-1, EN 60204-1 and VDE 0113-1 and may be used in applications with

- E-STOP pushbuttons
- Safety gates
- Light beam devices

Safety features

The relay meets the following safety requirements:

- The circuit is redundant with built-in self-monitoring.
- The safety function remains effective in the case of a component failure.
- The correct opening and closing of the safety function relays is tested automatically in each on-off cycle.
- The unit has an electronic fuse.

Block diagram

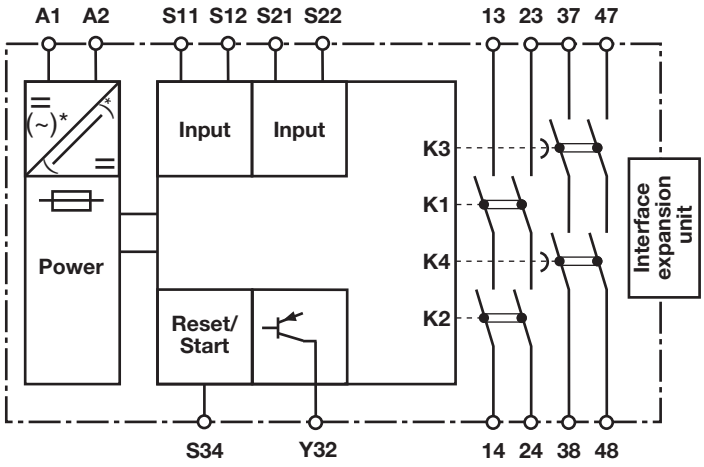

*only with U_B = 48 – 240 V AC/DC

Pilz GmbH & Co. KG, Felix-Wankel-Straße 2, 73760 Ostfildern, Germany
Telephone: +49 711 3409-0, Telefax: +49 711 3409-133, E-Mail: pilz.gmbh@pilz.de

1001972-EN-04-2011-09

Up to PL e of EN ISO 13849-1
PNOZ s5

Function description

- Single-channel operation: no redundancy in the input circuit, earth faults in the reset and input circuit are detected.
- Dual-channel operation without detection of shorts across contacts: redundant input circuit, detects
  - earth faults in the reset and input circuit,
  - short circuits in the input circuit and, with a monitored reset, in the reset circuit too.
- Dual-channel operation with detection of shorts across contacts: redundant input circuit, detects
  - earth faults in the reset and input circuit,
  - short circuits in the input circuit and, with a monitored reset, in the reset circuit too,
  - shorts between contacts in the input circuit.
- Automatic start: Unit is active once the input circuit has been closed.
- Manual reset: Unit is active once the input circuit is closed and then the reset circuit is closed.
- Monitored reset with falling edge: Unit is active once
  - the input circuit is closed and then the reset circuit is closed and opened again.
  - the reset circuit is closed and then opened again once the input circuit is closed.
- Monitored reset with rising edge: Unit is active once the input circuit is closed and once the reset circuit is closed after the waiting period has elapsed (see technical details).
- Reset with start-up test: The unit checks whether safety gates that are closed are opened and then closed again when supply voltage is applied.
- Ability to increase the number of contacts available on the
  - instantaneous safety contacts by using connectors to link to a PNOZsigma contact expansion module
  - delayed/instantaneous safety contacts by connecting contact expansion modules or external contactors

Pilz GmbH & Co. KG, Felix-Wankel-Straße 2, 73760 Ostfildern, Germany
Telephone: +49 711 3409-0, Telefax: +49 711 3409-133, E-Mail: pilz.gmbh@pilz.de

Up to PL e of EN ISO 13849-1
PNOZ s5

Timing diagram

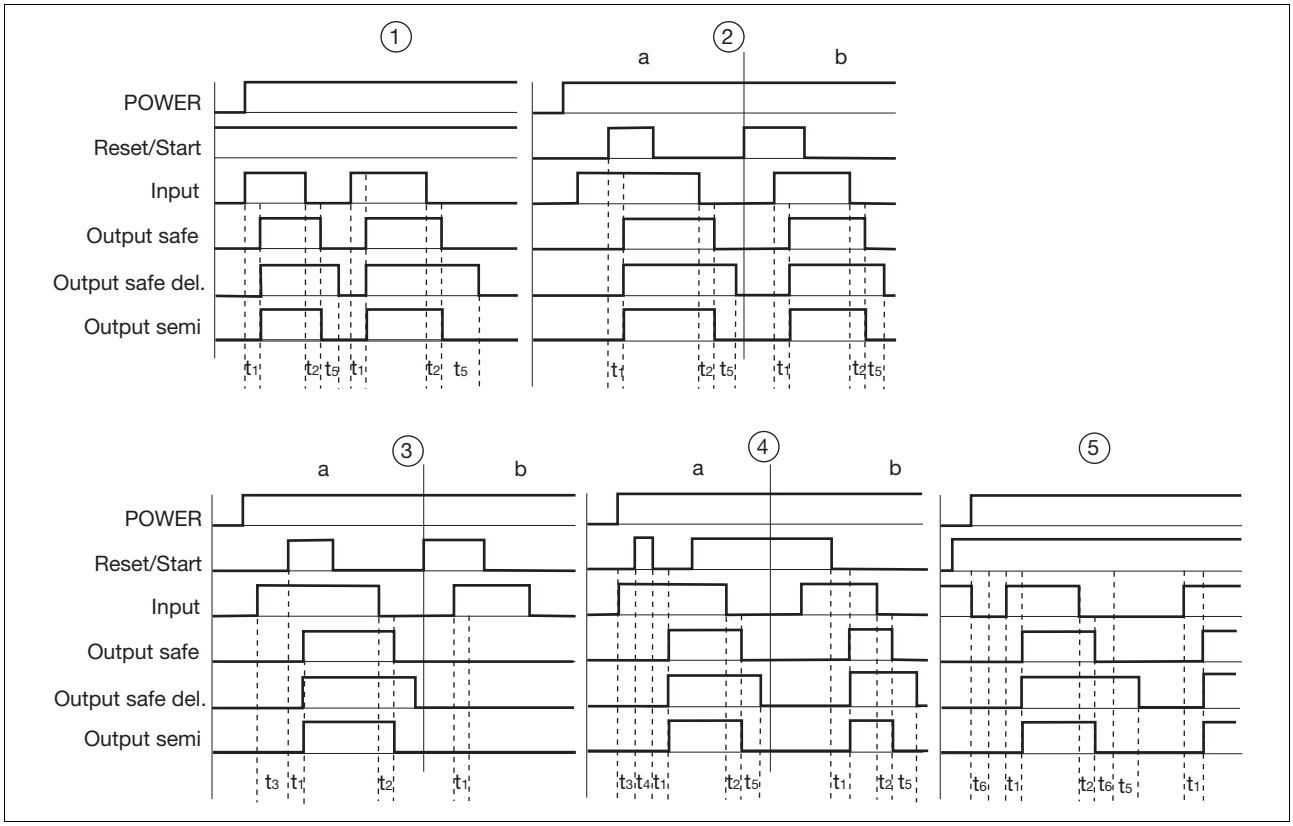

Key

- Power: Supply voltage
- Reset/Start: Reset circuit S12-S34
- Input: Input circuits S11-S12, S21-S22
- Output safe: Safety contacts 13-14, 23-24
- Out semi: Semiconductor outputY32
- ①: Automatic reset
- ②: Manual reset
- ③: Monitored reset with rising edge
- ④: Monitored reset with falling edge
- ⑤: Reset with start-up test
- a: Input circuit closes before reset circuit
- b: Reset circuit closes before input circuit
- t_1: Switch-on delay
- t_2: Delay-on de-energisation
- t_3: Waiting period
- t_4: Waiting period reset circuit was closed
- t_5: Delay time
- t_6: Minimum time safety gates open

Wiring

Please note:

- Information given in the “Technical details” must be followed.
- Outputs 13-14, 23-24 are instantaneous safety contacts, outputs 37-38, 47-48 are delay-on de-energisation safety contacts.
- To prevent contact welding, a fuse should be connected before the output contacts (see technical details).
- Calculation of the max. cable runs I_{max} in the input circuit:

$$I_{max} = \frac{R_{lmax}}{R_l / km}$$

R_{lmax} = max. overall cable resistance (see technical details)
R_l / km = cable resistance/km

- Use copper wire that can withstand 60/75 °C.
- Sufficient fuse protection must be provided on all output contacts with capacitive and inductive loads.
- With U_B 48 – 240 VAC/DC: Connect S21 to the protective earth system

Pilz GmbH & Co. KG, Felix-Wankel-Straße 2, 73760 Ostfildern, Germany
Telephone: +49 711 3409-0, Telefax: +49 711 3409-133, E-Mail: pilz.gmbh@pilz.de

Up to PL e of EN ISO 13849-1
PNOZ s5

Preparing for operation

- Supply voltage

Supply voltage	AC	DC
	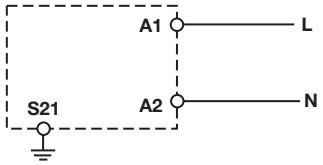	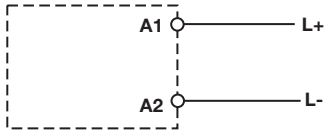

- Input circuit

Input circuit	Single-channel	Dual-channel
E-STOP **without** detection of shorts across contacts	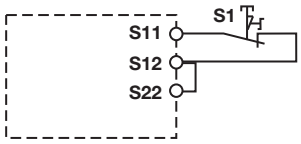	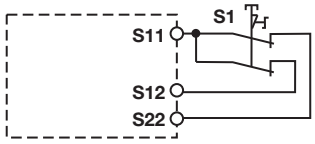
E-STOP **with** detection of shorts across contacts	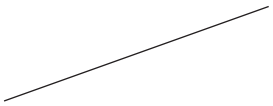	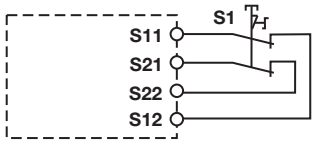
Safety gate **without** detection of shorts across contacts	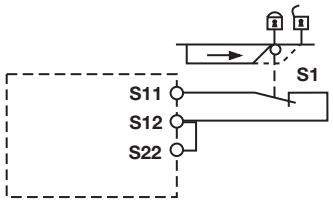	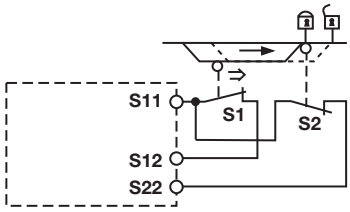
Safety gate **with** detection of shorts across contacts	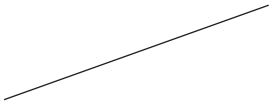	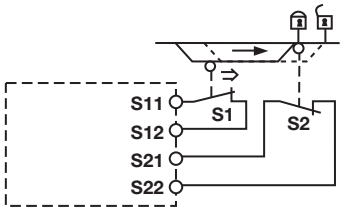
Light beam device or safety switch **with** detection of shorts across contacts via ESPE (only when U_B = 24 VDC)	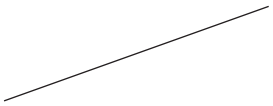	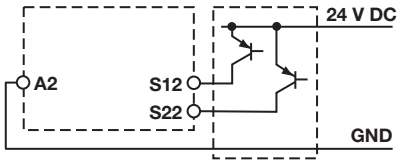

Pilz GmbH & Co. KG, Felix-Wankel-Straße 2, 73760 Ostfildern, Germany
Telephone: +49 711 3409-0, Telefax: +49 711 3409-133, E-Mail: pilz.gmbh@pilz.de

Up to PL e of EN ISO 13849-1
PNOZ s5

▸ Reset circuit/feedback loop

Reset circuit/feedback loop	Reset circuit	Feedback circuit
Automatic reset		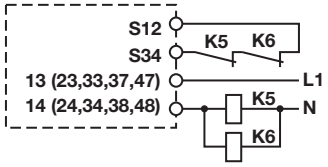
Manual/monitored reset	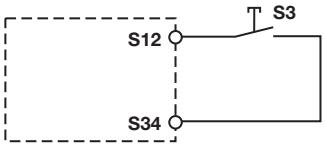	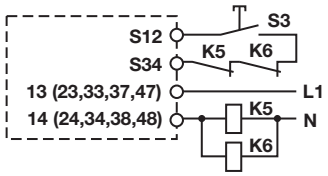

▸ Semiconductor output

U_B 24 VDC	U_B 48 – 240 VAC/DC
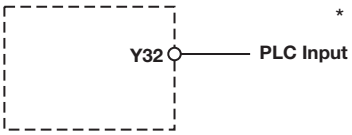 *Connect together the 0V connections on all the external power supplies	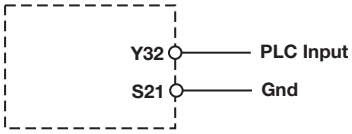

▸ Key

S1/S2	E-STOP/safety gate switch
S3	Reset button
	Switch operated
	Gate open
	Gate closed

2.3

Up to PL e of EN ISO 13849-1
PNOZ s5

Terminal configuration

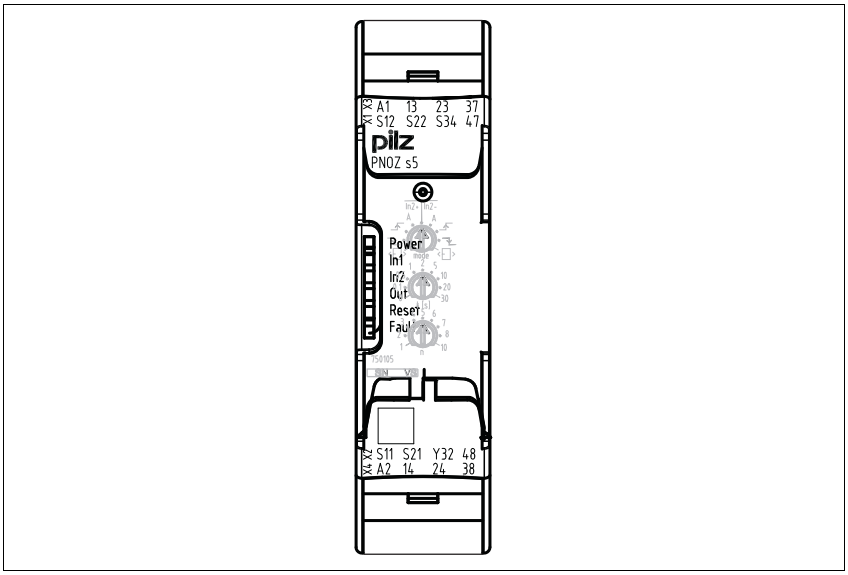

Installation

Install base unit without contact expander module:

- Ensure that the plug terminator is inserted at the side of the unit.

Connect base unit and PNOZsigma contact expander module:

- Remove the plug terminator at the side of the base unit and at the contact expander module.
- Connect the base unit and the contact expander module to the supplied connector before mounting the units to the DIN rail.

Installation in control cabinet

- The safety relay should be installed in a control cabinet with a protection type of at least IP54.
- Use the notch on the rear of the unit to attach it to a DIN rail (35 mm).
- When installed vertically: Secure the unit by using a fixing element (e.g. retaining brakket or end angle).
- Push the unit upwards or downwards before lifting it from the DIN rail.

Dimensions

*with spring-loaded terminals

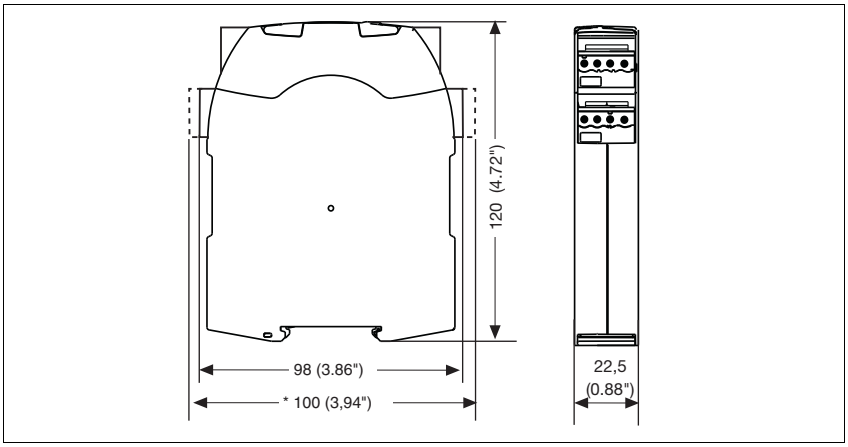

Pilz GmbH & Co. KG, Felix-Wankel-Straße 2, 73760 Ostfildern, Germany
Telephone: +49 711 3409-0, Telefax: +49 711 3409-133, E-Mail: pilz.gmbh@pilz.de

Up to PL e of EN ISO 13849-1
PNOZ s5

Notice

This data sheet is only intended for use during configuration. Please refer to the operating manual for installation and operation.

Service life graph

The service life graphs indicate the number of cycles from which failures due to wear must be expected. The wear is mainly caused by the electrical load; the mechanical load is negligible.

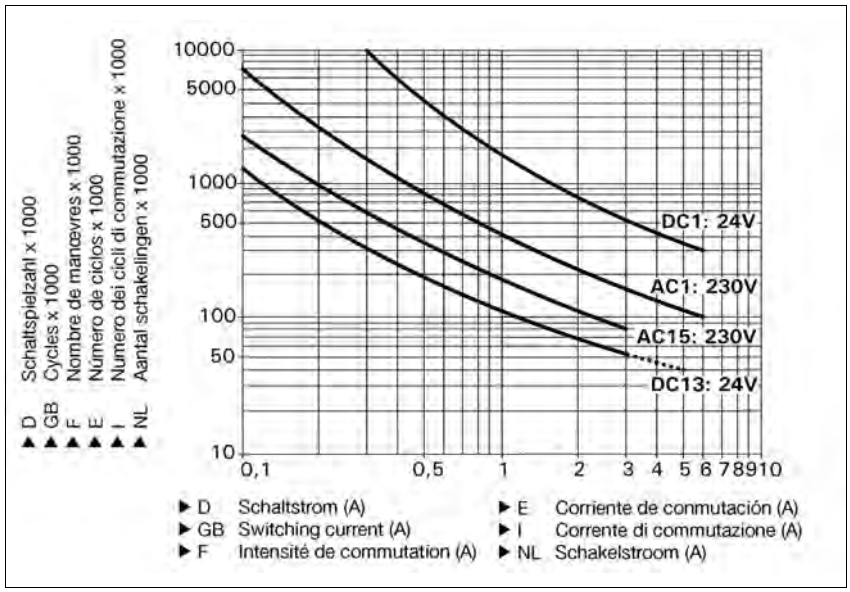

Example
- Inductive load: 0,2 A
- Utilisation category: AC15
- Contact service life: 1,000,000 cycles

Provided the application requires fewer than 1,000,000 cycles, the PFH value (see technical details) can be used in the calculation.

To increase the service life, sufficient spark suppression must be provided on all output contacts. With capacitive loads, any power surges that occur must be noted. With contactors, use freewheel diodes for spark suppression.

Technical details

Electrical data	
Supply voltage	
Supply voltage U_B DC	**24 V**
Supply voltage U_B AC/DC	**48 - 240 V**
Voltage tolerance	**-15 %/+10 %**
Power consumption at U_B AC	**8.0 VA** No. 750135, 751135
Power consumption at U_B DC	**4.0 W**
Frequency range AC	**50 - 60 Hz**
Residual ripple DC	**20 %**, **160 %**
Voltage and current at	
Input circuit DC: **24.0 V**	**40.0 mA**
Reset circuit DC: **24.0 V**	**40.0 mA**
Feedback loop DC: **24.0 V**	**40.0 mA**

Up to PL e of EN ISO 13849-1
PNOZ s5

Electrical data	
Number of output contacts	
Safety contacts (S) instantaneous:	**2**
Safety contacts (N/O), delayed:	**2**
Utilisation category in accordance with **EN 60947-4-1**	
Safety contacts: AC1 at **240 V**	I_{min}: **0.01 A** , I_{max}: **6.0 A** P_{max}: **1500 VA**
Safety contacts: DC1 at **24 V**	I_{min}: **0.01 A** , I_{max}: **6.0 A** P_{max}: **150 W**
Safety contacts, delayed: AC1 at **240 V**	I_{min}: **0.01 A** , I_{max}: **6.0 A** P_{max}: **1500 VA**
Safety contacts, delayed: DC1 at **24 V**	I_{min}: **0.01 A** , I_{max}: **6.0 A** P_{max}: **150 W**
Utilisation category in accordance with **EN 60947-5-1**	
Safety contacts: AC15 at **230 V**	I_{max}: **3.0 A**
Safety contacts: DC13 at **24 V** (6 cycles/min)	I_{max}: **4.0 A**
Safety contacts, delayed: AC15 at **230 V**	I_{max}: **3.0 A**
Safety contacts, delayed: DC13 at **24 V** (6 cycles/min)	I_{max}: **4.0 A**
Contact material	**AgCuNi + 0.2 µm Au**
External contact fuse protection (I_K = 1 kA) to **EN 60947-5-1**	
Blow-out fuse, quick	
Safety contacts:	**6 A**
Safety contacts, delayed:	**6 A**
Blow-out fuse, slow	
Safety contacts:	**4 A**
Safety contacts, delayed:	**4 A**
Circuit breaker 24 VAC/DC, characteristic B/C	
Safety contacts:	**4 A**
Safety contacts, delayed:	**4 A**
Semiconductor outputs (short circuit proof)	**24.0 V** DC, **20 mA**
Max. overall cable resistance R_{lmax} input circuits, reset circuits	
single-channel at U_B DC	**30 Ohm**
single-channel at U_B AC	**30 Ohm** No. 750135, 751135
dual-channel without detect. of shorts across contacts at U_B DC	**30 Ohm**
dual-channel without detect. of shorts across contacts at U_B AC	**30 Ohm** No. 750135, 751135
dual-channel with detect. of shorts across contacts at U_B DC	**30 Ohm**
dual-channel with detect. of shorts across contacts at U_B AC	**30 Ohm** No. 750135, 751135
Min. input resistance when switching on	**110 Ohm**
Safety-related characteristic data	
PL in accordance with **EN ISO 13849-1: 2006**	
Safety contacts, instantaneous	**PL e** (**Cat. 4**)
Safety contacts, delayed	**PL e** (**Cat. 4**)
Category in accordance with **EN 954-1**	
Safety contacts, instantaneous	**Cat. 4**
Safety contacts, delayed	**Cat. 4**
SIL CL in accordance with **EN IEC 62061**	
Safety contacts, instantaneous	**SIL CL 3**
Safety contacts, delayed	**SIL CL 3**
PFH in accordance with **EN IEC 62061**	
Safety contacts, instantaneous	**2.31E-09**
Safety contacts, delayed	**2.34E-09**
SIL in accordance with **IEC 61511**	
Safety contacts, instantaneous	**SIL 3**
Safety contacts, delayed	**SIL 3**

Pilz GmbH & Co. KG, Felix-Wankel-Straße 2, 73760 Ostfildern, Germany
Telephone: +49 711 3409-0, Telefax: +49 711 3409-133, E-Mail: pilz.gmbh@pilz.de

Up to PL e of EN ISO 13849-1
PNOZ s5

Safety-related characteristic data	
PFD in accordance with **IEC 61511**	
Safety contacts, instantaneous	**2.03E-06**
Safety contacts, delayed	**2.75E-05**
T_M [year] in accordance with **EN ISO 13849-1: 2006**	**20**
Times	
Switch-on delay	
with automatic reset typ.	**180 ms**
with automatic reset max.	**400 ms**
with automatic reset after power on typ.	**1,430 ms**
with automatic reset after power on max.	**2,000 ms**
with manual reset typ.	**45 ms**
with manual reset max.	**85 ms**
on monitored reset with rising edge typ.	**45 ms**
on monitored reset with rising edge max.	**130 ms**
on monitored reset with falling edge typ.	**60 ms**
on monitored reset with falling edge max.	**150 ms**
Delay-on de-energisation	
with E-STOP typ.	**15 ms**
with E-STOP max.	**20 ms**
with power failure typ.	**75 ms**
with power failure max.	**110 ms**
Recovery time at max. switching frequency 1/s	
after E-STOP	**150 ms +tv**
after power failure	**200 ms**
Delay time t_V: selectable	**0,00 s**; **0,10 s**; **0,20 s**; **0,30 s**; **0,40 s**; **0,50 s**; **0,60 s**; **0,70 s**; **0,80 s**; **1,00 s**; **1,50 s**; **2,00 s**; **2,50 s**; **3,00 s**; **3,50 s**; **4,00 s**; **5,00 s**; **6,00 s**; **7,00 s**; **8,00 s**; **10,00 s**; **12,00 s**; **14,00 s**; **15,00 s**; **16,00 s**; **20,00 s**; **25,00 s**; **30,00 s**; **35,00 s**; **40,00 s**; **50,00 s**; **60,00 s**; **70,00 s**; **80,00 s**; **90,00 s**; **100,00 s**; **120,00 s**; **140,00 s**; **150,00 s**; **160,00 s**; **180,00 s**; **200,00 s**; **210,00 s**; **240,00 s**; **300,00 s**
Repetition accuracy	**+/-1 % + +/-20 ms**
Repetition accuracy in the case of a fault	**+/-15 % + +/-20 ms**
Time accuracy	**+/-1 % + +/-20 ms**
Waiting period with a monitored reset	
with rising edge	**150 ms**
with falling edge	**240 ms**
Min. start pulse duration with a monitored reset	
with rising edge	**30 ms**
with falling edge	**70 ms**
Simultaneity, channel 1 and 2	∞
Supply interruption before de-energisation	**20 ms**
Environmental data	
EMC	**EN 60947-5-1**, **EN 61000-6-2**, **EN 61000-6-4**
Vibration to **EN 60068-2-6**	
Frequency	**10 - 55 Hz**
Amplitude	**0.35 mm**
Climatic suitability	**EN 60068-2-78**
Airgap creepage in accordance with **EN 60947-1**	
Pollution degree	**2**
Overvoltage category	**III**
Rated insulation voltage	**250 V**
Rated impulse withstand voltage	**4.00 kV**
Ambient temperature	**-10 - 55 °C**
Storage temperature	**-40 - 85 °C**

Up to PL e of EN ISO 13849-1
PNOZ s5

Environmental data	
Protection type	
Mounting (e.g. cabinet)	**IP54**
Housing	**IP40**
Terminals	**IP20**
Mechanical data	
Housing material	
Housing	**PC**
Front	**PC**
Cross section of external conductors with screw terminals	
1 core flexible	**0.25 - 2.50 mm² , 24 - 12 AWG** No. 750105, 750135
2 core, same cross section, flexible:	
with crimp connectors, without insulating sleeve	**0.25 - 1.00 mm² , 24 - 16 AWG** No. 750105, 750135
without crimp connectors or with TWIN crimp connectors	**0.20 - 1.50 mm² , 24 - 16 AWG** No. 750105, 750135
Torque setting with screw terminals	**0.50 Nm** No. 750105, 750135
Cross section of external conductors with spring-loaded terminals: Flexible with/without crimp connectors	**0.20 - 2.50 mm² , 24 - 12 AWG** No. 751105, 751135, 751185
Spring-loaded terminals: Terminal points per connection	**2** No. 751105, 751135, 751185
Stripping length	**9 mm** No. 751105, 751135, 751185
Dimensions	
Height	**102.0 mm** No. 751105, 751135, 751185 **96.0 mm** No. 750105, 750135
Width	**22.5 mm**
Depth	**120.0 mm**
Weight	**235 g** No. 750105, 751105, 751185 **280 g** No. 750135, 751135

No. stands for order number.

It is essential to consider the relay's service life graphs. The relay outputs' safety-related characteristic data is only valid if the values in the service life graphs are met.

The PFH value depends on the switching frequency and the load on the relay output.
If the service life graphs are not accessible, the stated PFH value can be used irrespective of the switching frequency and the load, as the PFH value already considers the relay's B10d value as well as the failure rates of the other components.

All the units used within a safety function must be considered when calculating the safety characteristic data.

INFORMATION
A safety function's SIL/PL values are **not** identical to the SIL/PL values of the units that are used and may be different. We recommend that you use the PAScal software tool to calculate the safety function's SIL/PL values.

The standards current on **2006-04** apply.

Pilz GmbH & Co. KG, Felix-Wankel-Straße 2, 73760 Ostfildern, Germany
Telephone: +49 711 3409-0, Telefax: +49 711 3409-133, E-Mail: pilz.gmbh@pilz.de

Up to PL e of EN ISO 13849-1
PNOZ s5

Conventional thermal current while loading several contacts

Number of contacts	I_{th} per contact at U_B DC
1	**6.00 A**
2	**6.00 A**
3	**6.00 A**
4	**6.00 A**

Order reference

Type	Features		Terminals	Order no.
PNOZ s5		24 VDC	With screw terminals	750 105
PNOZ s5 C		24 VDC	With spring-loaded terminals	751 105
PNOZ s5 C (coated version)		24 VDC	With spring-loaded terminals	751 185
PNOZ s5	48 – 240 VAC	48 – 240 VDC	With screw terminals	750 135
PNOZ s5 C	48 – 240 VAC	48 – 240 VDC	With spring-loaded terminals	751 135

Up to PL e of EN ISO 13849-1
PNOZ s6



Two-hand control unit for press controllers and safety circuits

Approvals

	PNOZ s6
c UL us LISTED	◆
TÜV SÜD	◆
CCC	◆

Unit features

- Positive-guided relay outputs:
  - 3 safety contacts (N/O), instantaneous
  - 1 auxiliary contact (N/C), instantaneous
- 1 semiconductor output
- Connection options for:
  - 2 operator elements (buttons)
- A connector can be used to connect 1 PNOZsigma contact expansion module
- LED indicator for:
  - Supply voltage
  - Input status, channel 1
  - Input status, channel 2
  - Switch status, safety contacts
  - Feedback circuit
  - Error
- Plug-in connection terminals (either spring-loaded terminal or screw terminal)

Unit description

The two-hand control relay meets the requirements of EN 574 Type IIIC. It forces the operator to keep his hands outside the danger zone area during the hazardous movement. The unit is suitable for use on controllers for metalworking presses as a component for simultaneous switching.
It can be used in applications with

- Mechanical presses (EN 692)
- Hydraulic presses (EN 693)
- Safety circuits in accordance with EN 60204-1

Safety features

The two-hand control relay meets the following safety requirements:

- The circuit is redundant with built-in self-monitoring
- The safety function remains effective in the case of a component failure
- The circuit prevents a further press stroke in the case of:
  - Relay failure
  - Contact welding
  - Coil defect on a relay
  - Open circuit
  - Short circuit
- The unit has an electronic fuse.

Block diagram

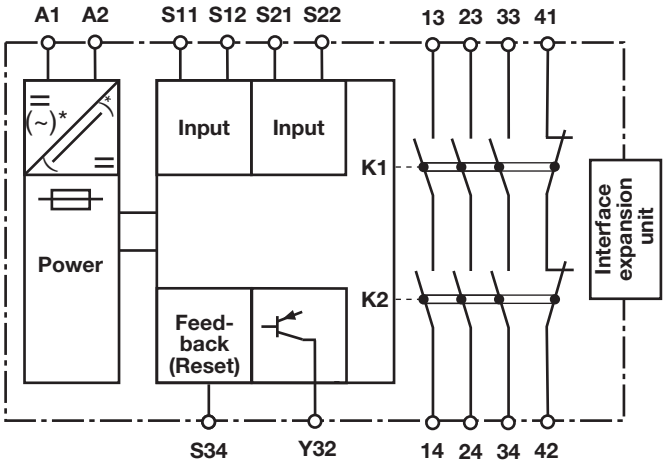

* only when U_B = 48 – 240 VAC/DC

Pilz GmbH & Co. KG, Felix-Wankel-Straße 2, 73760 Ostfildern, Germany
Telephone: +49 711 3409-0, Telefax: +49 711 3409-133, E-Mail: pilz.gmbh@pilz.de
1001973-EN-04-2011-11

Up to PL e of EN ISO 13849-1
PNOZ s6

Function description

- The two-hand control relay must be activated by simultaneously pressing two buttons within **0.5 s**. If one or both of the buttons are released, the unit interrupts the control command for the hazardous movement.
- Reactivation: The output relays will not re-energise until both operator elements have been released and then re-operated simultaneously.

Timing diagram

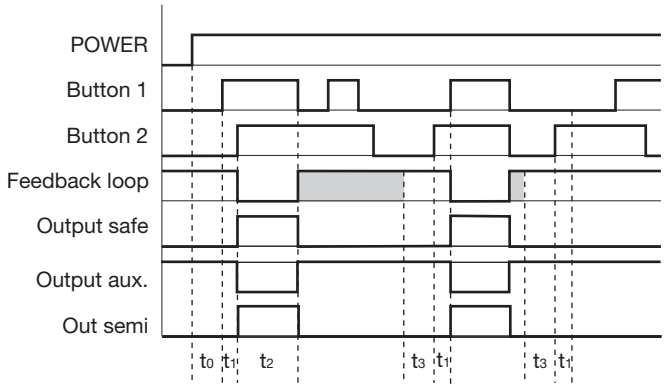

Key

- POWER: Supply voltage
- Button 1/Button 2: Input circuits S11-S12, S21- S22
- Feedback loop: Feedback loop S34
- Output safe: Safety outputs 13-14, 23-24, 33-34
- Output aux: Auxiliary contacts 41-42
- Out semi: Semiconductor output switch status Y32
- t_0: Recovery time after power on
- t_1: Simultaneity, channel 1 and 2
- t_2: Operating cycle ended through button 1 or 2
- t_3: S34-S12 must be closed before before the button is operated (recovery time)

Shaded area: Status irrelevant

Wiring

Please note:

- Information given in the “Technical details” must be followed.
- Outputs 13-14, 23-24, 33-34 are safety contacts, output 41-42 is an auxiliary contact (e.g. for display).
- To prevent contact welding, a fuse should be connected before the output contacts (see technical details).
- Calculation of the max. cable runs l_{max} in the input circuit:

$$l_{max} = \frac{R_{lmax}}{R_l / km}$$

R_{lmax} = max. overall cable resistance (see technical details)
R_l /km = cable resistance/km

- Use copper wire that can withstand 60/75 °C.
- Sufficient fuse protection must be provided on all output contacts with capacitive and inductive loads.

Up to PL e of EN ISO 13849-1
PNOZ s6

Preparing for operation

- Supply voltage

Supply voltage	AC	DC
	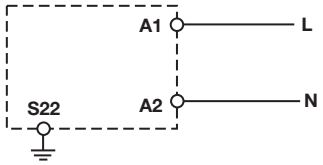	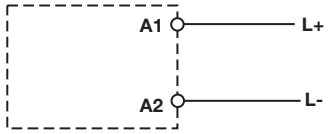

- Input circuit

Input circuit	Single-channel	Dual-channel
Two-hand button **with** detection of shorts across contacts	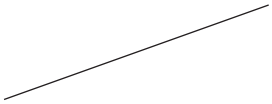	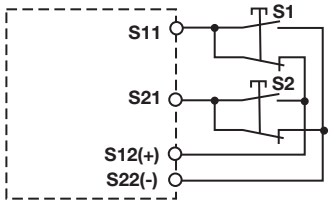

- Feedback loop

	Feedback loop
Contacts from external contactors	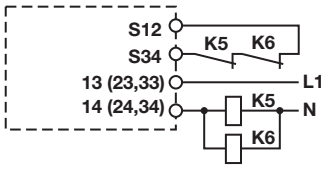

- Semiconductor output

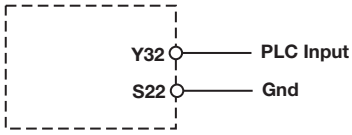

- Key

S1/S2	Two-hand button

Pilz GmbH & Co. KG, Felix-Wankel-Straße 2, 73760 Ostfildern, Germany
Telephone: +49 711 3409-0, Telefax: +49 711 3409-133, E-Mail: pilz.gmbh@pilz.de

Up to PL e of EN ISO 13849-1
PNOZ s6

Terminal configuration

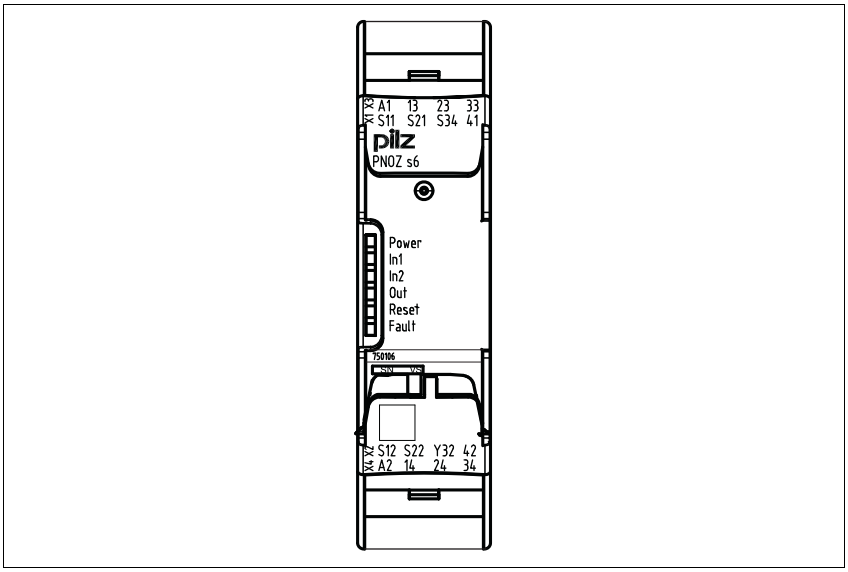

Installation

Install base unit without contact expander module:
- Ensure that the plug terminator is inserted at the side of the unit.

Connect base unit and PNOZsigma contact expander module:
- Remove the plug terminator at the side of the base unit and at the contact expander module.
- Connect the base unit and the contact expander module to the supplied connector before mounting the units to the DIN rail.

Installation in control cabinet
- The safety relay should be installed in a control cabinet with a protection type of at least IP54.
- Use the notch on the rear of the unit to attach it to a DIN rail (35 mm).
- When installed vertically: Secure the unit by using a fixing element (e.g. retaining brakket or end angle).
- Push the unit upwards or downwards before lifting it from the DIN rail.

CAUTION!
The distance of the button connected to the two-hand relay from the nearest danger zone must be large enough that if one of the buttons is released, the dangerous movement is interrupted before the operator can reach into the danger zone (see EN 999 "The positioning of protective equipment in respect of approach speeds of parts of the human body").

Dimensions

*with spring-loaded terminals

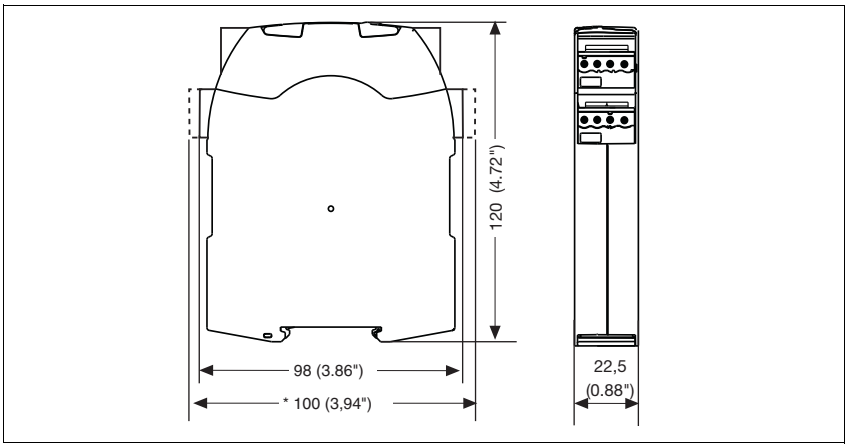

Up to PL e of EN ISO 13849-1
PNOZ s6

NOTICE

This data sheet is only intended for use during configuration. Please refer to the operating manual for installation and operation.

Service life graph

The service life graphs indicate the number of cycles from which failures due to wear must be expected. The wear is mainly caused by the electrical load; the mechanical load is negligible.

U_B 24 V DC

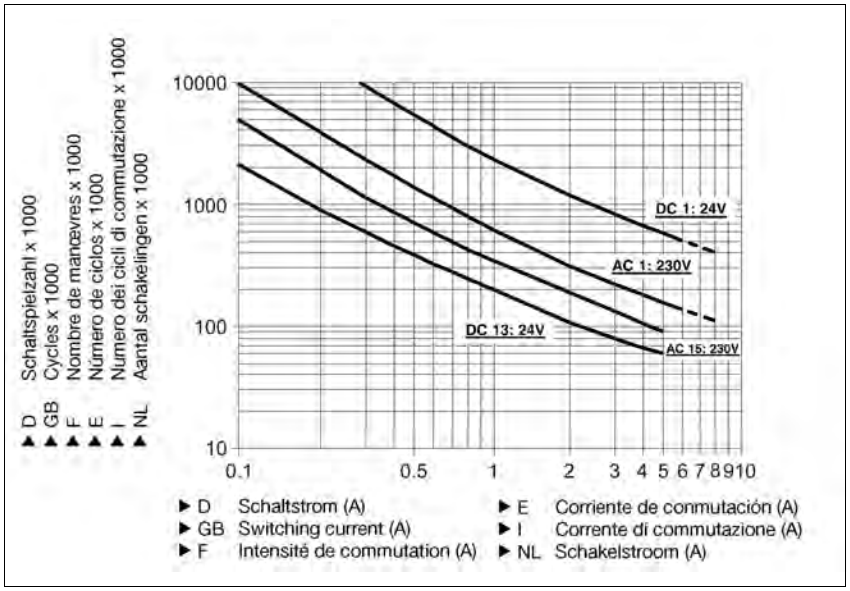

Example
- Inductive load: 0,2 A
- Utilisation category: AC15
- Contact service life: 2,000,000 cycles

Provided the application requires fewer than 2,000,000 cycles, the PFH value (see technical details) can be used in the calculation.
To increase the service life, sufficient spark suppression must be provided on all output contacts. With capacitive loads, any power surges that occur must be noted. With contactors, use freewheel diodes for spark suppression.

Pilz GmbH & Co. KG, Felix-Wankel-Straße 2, 73760 Ostfildern, Germany
Telephone: +49 711 3409-0, Telefax: +49 711 3409-133, E-Mail: pilz.gmbh@pilz.de

Up to PL e of EN ISO 13849-1
PNOZ s6

U_B 48-240 V AC/DC

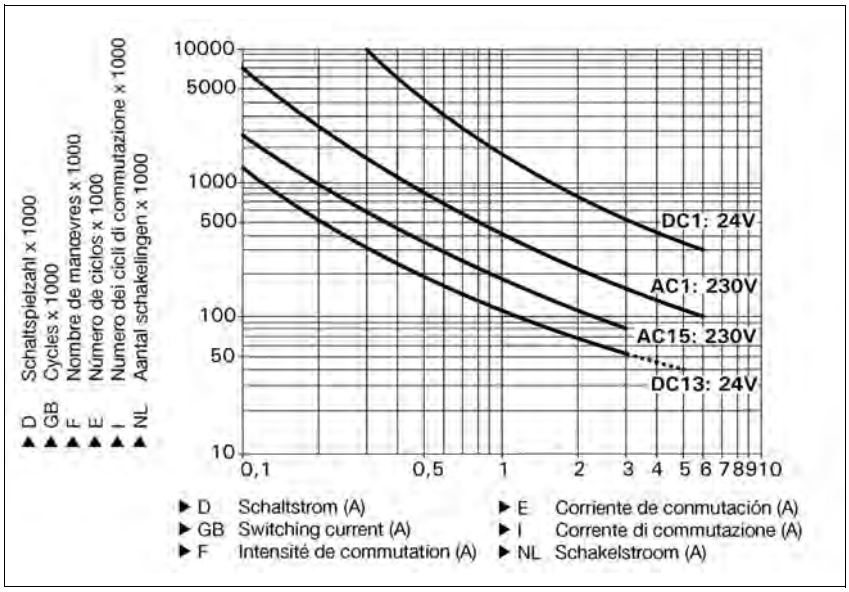

Example
- Inductive load: 0,2 A
- Utilisation category: AC15
- Contact service life: 1,000,000 cycles

Provided the application requires fewer than 1,000,000 cycles, the PFH value (see technical details) can be used in the calculation.

To increase the service life, sufficient spark suppression must be provided on all output contacts. With capacitive loads, any power surges that occur must be noted. With contactors, use freewheel diodes for spark suppression.

Technical details

Electrical data	
Supply voltage	
Supply voltage U_B DC	**24 V**
Supply voltage U_B AC/DC	**48 - 240 V**
Voltage tolerance	**-15 %/+10 %**
Power consumption at U_B AC	**7.0 VA** No. 750136, 751136
Power consumption at U_B DC	**3.5 W**
Frequency range AC	**50 - 60 Hz**
Residual ripple DC	**20 %**
Voltage and current at	
Input circuit DC: **24.0 V**	
N/O contact	**20 mA**
N/C contact	**10 mA**
Feedback loop DC: **24.0 V**	**15.0 mA**
Number of output contacts	
Safety contacts (S) instantaneous:	**3**
Auxiliary contacts (N/C):	**1**
Type in accordance with **EN 574**	**III C**

Up to PL e of EN ISO 13849-1
PNOZ s6

Electrical data	
Utilisation category in accordance with **EN 60947-4-1**	
Safety contacts: AC1 at **240 V**	I_{min}: **0.01 A** , I_{max}: **6.0 A** P_{max}: **1500 VA**
Safety contacts: DC1 at **24 V**	I_{min}: **0.01 A** , I_{max}: **6.0 A** P_{max}: **150 W**
Auxiliary contacts: AC1 at **240 V**	I_{min}: **0.01 A** , I_{max}: **6.0 A** P_{max}: **1500 VA**
Auxiliary contacts: DC1 at **24 V**	I_{min}: **0.01 A** , I_{max}: **6.0 A** P_{max}: **150 W**
Utilisation category in accordance with **EN 60947-5-1**	
Safety contacts: AC15 at **230 V**	I_{max}: **3.0 A** No. 750136, 751136 **5.0 A** No. 750106, 751106
Safety contacts: DC13 at **24 V** (6 cycles/min)	I_{max}: **4.0 A** No. 750136, 751136 **5.0 A** No. 750106, 751106
Auxiliary contacts: AC15 at **230 V**	I_{max}: **3.0 A** No. 750136, 751136 **5.0 A** No. 750106, 751106
Auxiliary contacts: DC13 at **24 V** (6 cycles/min)	I_{max}: **4.0 A** No. 750136, 751136 **5.0 A** No. 750106, 751106
Contact material	**AgCuNi + 0.2 µm Au**
External contact fuse protection (I_K = 1 kA) to **EN 60947-5-1**	
Blow-out fuse, quick	
Safety contacts:	**10 A** No. 750106, 751106 **6 A** No. 750136, 751136
Auxiliary contacts:	**10 A** No. 750106, 751106 **6 A** No. 750136, 751136
Blow-out fuse, slow	
Safety contacts:	**4 A** No. 750136, 751136 **6 A** No. 750106, 751106
Auxiliary contacts:	**4 A** No. 750136, 751136 **6 A** No. 750106, 751106
Circuit breaker 24 VAC/DC, characteristic B/C	
Safety contacts:	**4 A** No. 750136, 751136 **6 A** No. 750106, 751106
Auxiliary contacts:	**4 A** No. 750136, 751136 **6 A** No. 750106, 751106
Semiconductor outputs (short circuit proof)	**24.0 V** DC,**20 mA**
Max. overall cable resistance R_{lmax} per input circuit	**30 Ohm**
Safety-related characteristic data	
PL in accordance with **EN ISO 13849-1: 2006**	**PL e** (**Cat. 4**)
Category in accordance with **EN 954-1**	**Cat. 4**
SIL CL in accordance with **EN IEC 62061**	**SIL CL 3**
PFH in accordance with **EN IEC 62061**	**2.62E-09**
SIL in accordance with **IEC 61511**	**SIL 3**
PFD in accordance with **IEC 61511**	**3.32E-05**
T_M [year] in accordance with **EN ISO 13849-1: 2006**	**20**
Times	
Delay-on de-energisation (reaction time in accordance with EN 574)	
N/O contact	**30 ms**
N/C contact	**40 ms**
Recovery time	**250 ms**
Simultaneity, channel 1 and 2	**0.5 s**
Supply interruption before de-energisation	**20 ms**
Environmental data	
EMC	**EN 60947-5-1**, **EN 61000-6-2**, **EN 61000-6-4**
Vibration to **EN 60068-2-6**	
Frequency	**10 - 55 Hz**
Amplitude	**0.35 mm**

Pilz GmbH & Co. KG, Felix-Wankel-Straße 2, 73760 Ostfildern, Germany
Telephone: +49 711 3409-0, Telefax: +49 711 3409-133, E-Mail: pilz.gmbh@pilz.de

Up to PL e of EN ISO 13849-1
PNOZ s6

Environmental data	
Climatic suitability	**EN 60068-2-78**
Airgap creepage in accordance with **EN 60947-1**	
Pollution degree	**2**
Overvoltage category	**III / II**
Rated insulation voltage	**250 V**
Rated impulse withstand voltage	**4.00 kV**
Ambient temperature	**-10 - 55 °C**
Storage temperature	**-40 - 85 °C**
Protection type	
Mounting (e.g. cabinet)	**IP54**
Housing	**IP40**
Terminals	**IP20**
Mechanical data	
Housing material	
Housing	**PC**
Front	**PC**
Cross section of external conductors with screw terminals	
1 core flexible	**0.25 - 2.50 mm² , 24 - 12 AWG** No. 750106, 750136
2 core, same cross section, flexible:	
with crimp connectors, without insulating sleeve	**0.25 - 1.00 mm² , 24 - 16 AWG** No. 750106, 750136
without crimp connectors or with TWIN crimp connectors	**0.20 - 1.50 mm² , 24 - 16 AWG** No. 750106, 750136
Torque setting with screw terminals	**0.50 Nm** No. 750106, 750136
Cross section of external conductors with spring-loaded terminals: Flexible with/without crimp connectors	**0.20 - 2.50 mm² , 24 - 12 AWG** No. 751106, 751136
Spring-loaded terminals: Terminal points per connection	**2** No. 751106, 751136
Stripping length	**9 mm** No. 751106, 751136
Dimensions	
Height	**100.0 mm** No. 751106, 751136 **98.0 mm** No. 750106, 750136
Width	**22.5 mm**
Depth	**120.0 mm**
Weight	**190 g** No. 750106, 751106 **210 g** No. 750136, 751136

No. stands for order number.

It is essential to consider the relay's service life graphs. The relay outputs' safety-related characteristic data is only valid if the values in the service life graphs are met.

The PFH value depends on the switching frequency and the load on the relay output.
If the service life graphs are not accessible, the stated PFH value can be used irrespective of the switching frequency and the load, as the PFH value already considers the relay's B10d value as well as the failure rates of the other components.

All the units used within a safety function must be considered when calculating the safety characteristic data.

INFORMATION
A safety function's SIL/PL values are **not** identical to the SIL/PL values of the units that are used and may be different. We recommend that you use the PAScal software tool to calculate the safety function's SIL/PL values.

The standards current on **2011-06** apply.

Pilz GmbH & Co. KG, Felix-Wankel-Straße 2, 73760 Ostfildern, Germany
Telephone: +49 711 3409-0, Telefax: +49 711 3409-133, E-Mail: pilz.gmbh@pilz.de

Up to PL e of EN ISO 13849-1
PNOZ s6

Conventional thermal current while loading several contacts

Number of contacts	I_{th} per contact at U_B DC	I_{th} at U_B AC
1	**6.00 A**	**6.00 A** No. 750136, 751136
2	**6.00 A**	**6.00 A** No. 750136, 751136
3	**4.50 A** No. 750136, 751136 **6.00 A** No. 750106, 751106	**4.50 A** No. 750136, 751136

Order reference

Type	Features		Terminals	Order no.
PNOZ s6		24 VDC	With screw terminals	750 106
PNOZ s6 C		24 VDC	With spring-loaded terminals	751 106
PNOZ s6	48 – 240 VAC/DC		With screw terminals	750 136
PNOZ s6 C	48 – 240 VAC/DC		With spring-loaded terminals	751 136

Pilz GmbH & Co. KG, Felix-Wankel-Straße 2, 73760 Ostfildern, Germany
Telephone: +49 711 3409-0, Telefax: +49 711 3409-133, E-Mail: pilz.gmbh@pilz.de

Up to PL c of EN ISO 13849-1
PNOZ s6.1



Two-hand control device for safety circuits

Approvals

	PNOZ s6.1
c UL us LISTED	◆
TÜV SÜD	◆
CCC	◆

Unit features

- Positive-guided relay outputs:
  - 3 safety contacts (N/O), instantaneous
  - 1 auxiliary contact (N/C), instantaneous
- 1 semiconductor output
- Connection options for:
  - 2 control elements (pushbuttons)
  - E-STOP pushbutton
  - Safety gate limit switch
- A connector can be used to connect 1 PNOZsigma contact expansion module
- LED indicator for:
  - Supply voltage
  - Input status, channel 1
  - Input status, channel 2
  - Switch status, safety contacts
  - Feedback loop
  - Error
- Plug-in connection terminals (either spring-loaded terminal or screw terminal)
- See order reference for unit types

Unit description

The safety relay can be used as a two-hand control relay or for simultaneity monitoring.
The safety relay meets the requirements of EN 60947-5-1, EN 60204-1 and VDE 0113-1 and may be used in applications with

- E-STOP pushbuttons
- Safety gates

The two-hand control relay meets the requirements of EN 574 Type IIIA. It forces the operator to keep his hands outside the danger zone area during the hazardous movement. It is designed for use in two-hand circuits.
CAUTION!
The two-hand control relay may **not** be used on **press controllers**. It is only suitable for use where the risk analysis has established a low level of risk (e.g. EN 954-1 Cat. 1 and EN ISO 13849-1 Cat. 1).

Safety features

The safety relay meets the following safety requirements:

- The safety relay prevents the plant from being enabled in the following cases:
  - Power supply failure
  - Component failure
  - Short circuit on an input circuit
  - Coil defect
  - Open circuit
  - Earth fault
- In each on-off cycle, the output relays on the safety device are tested to ensure they open and close correctly

Up to PL c of EN ISO 13849-1
PNOZ s6.1

Block diagram

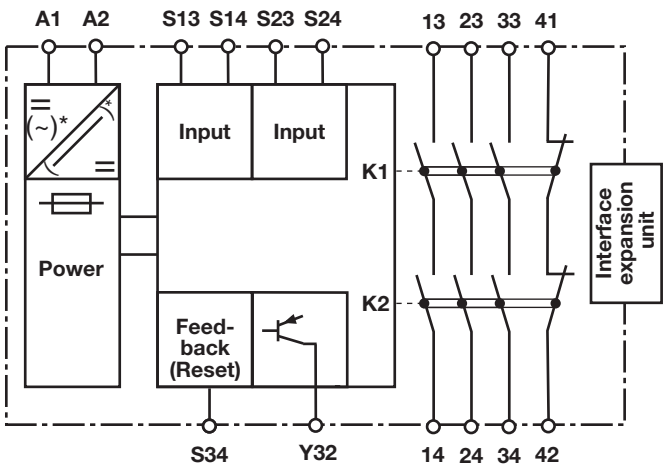

* only when U_B = 48 – 240 VAC/DC

Function description

- The safety relay must be activated by simultaneously pressing two control elements (pushbuttons) within **0.5 s**. If one or both pushbuttons are released or the contacts open, the unit interrupts the control command for the hazardous movement.
- Reactivation: The output relays will not re-energise until both control elements have been released and re-operated simultaneously or the contacts have opened and then closed.

Timing diagram

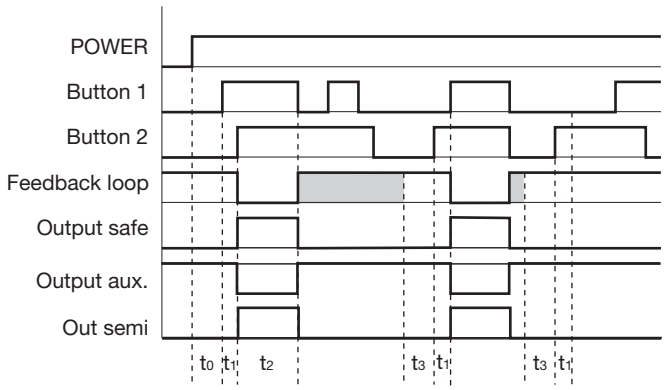

Key

- POWER: Supply voltage
- Button 1/Button 2: Input circuits S13-S14, S23-S24
- Feedback loop: Feedback loop S34
- Output safe: Safety outputs 13-14, 23-24, 33-34
- Output aux: Auxiliary contacts 41-42
- Out semi: Semiconductor output switch status Y32
- t_0: Recovery time after power on
- t_1: Simultaneity, channel 1 and 2
- t_2: Operating cycle ended through button 1 or 2
- t_3: S34-S12 must be closed before before the button is operated (recovery time)

Shaded area: Status irrelevant

Pilz GmbH & Co. KG, Felix-Wankel-Straße 2, 73760 Ostfildern, Germany
Telephone: +49 711 3409-0, Telefax: +49 711 3409-133, E-Mail: pilz.gmbh@pilz.de

Up to PL c of EN ISO 13849-1
PNOZ s6.1

Wiring

Please note:
- Information given in the “Technical details” must be followed.
- Outputs 13-14, 23-24, 33-34 are safety contacts, output 41-42 is an auxiliary contact (e.g. for display).
- To prevent contact welding, a fuse should be connected before the output contacts (see technical details).
- Calculation of the max. cable runs I_{max} in the input circuit:

$$I_{max} = \frac{R_{lmax}}{R_l / km}$$

R_{lmax} = max. overall cable resistance (see technical details)
R_l /km = cable resistance/km

- Use copper wire that can withstand 60/75 °C.
- Sufficient fuse protection must be provided on all output contacts with capacitive and inductive loads.

Up to PL c of EN ISO 13849-1
PNOZ s6.1

Preparing for operation

- Supply voltage

Supply voltage	AC	DC
	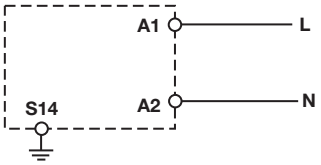	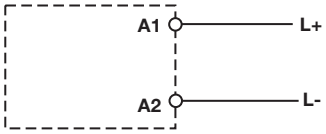

- Input circuit

Input circuit	Single-channel	Dual-channel
Two-hand button **with** detection of shorts across contacts	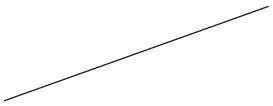	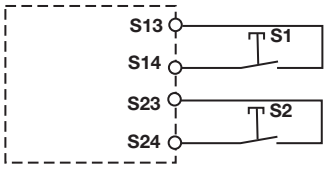
Simultaneity monitoring in safety gate applications with automatic reset after the safety gate is closed	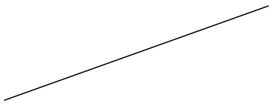	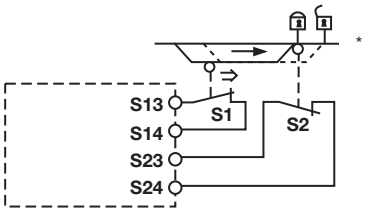

*The unit starts automatically when the E-STOP / safety gate device is released. Use external circuit measures to prevent an unexpected restart.

- Feedback loop

	Feedback loop
Contacts from external contactors	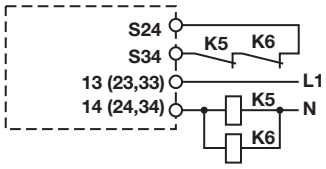

Pilz GmbH & Co. KG, Felix-Wankel-Straße 2, 73760 Ostfildern, Germany
Telephone: +49 711 3409-0, Telefax: +49 711 3409-133, E-Mail: pilz.gmbh@pilz.de

Up to PL c of EN ISO 13849-1
PNOZ s6.1

- Semiconductor output

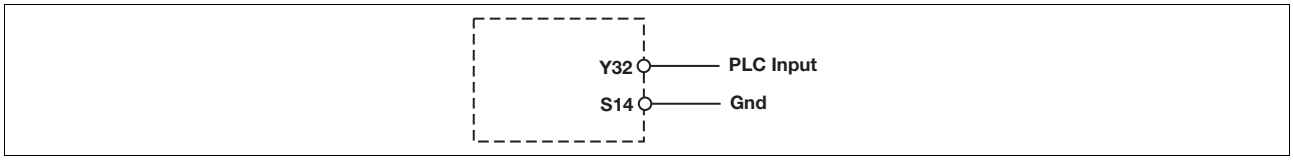

- Key

S1/S2	Two-hand button

Up to PL c of EN ISO 13849-1
PNOZ s6.1

Terminal configuration

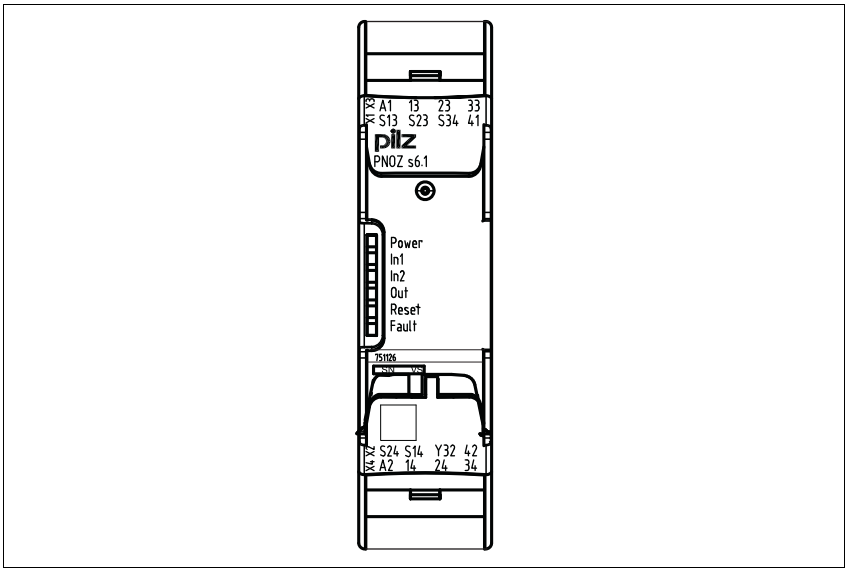

Installation

Install base unit without contact expander module:
- Ensure that the plug terminator is inserted at the side of the unit.

Connect base unit and PNOZsigma contact expander module:
- Remove the plug terminator at the side of the base unit and at the contact expander module.
- Connect the base unit and the contact expander module to the supplied connector before mounting the units to the DIN rail.

Installation in control cabinet
- The safety relay should be installed in a control cabinet with a protection type of at least IP54.
- Use the notch on the rear of the unit to attach it to a DIN rail (35 mm).
- When installed vertically: Secure the unit by using a fixing element (e.g. retaining brakket or end angle).
- Push the unit upwards or downwards before lifting it from the DIN rail.

Dimensions

*with spring-loaded terminals

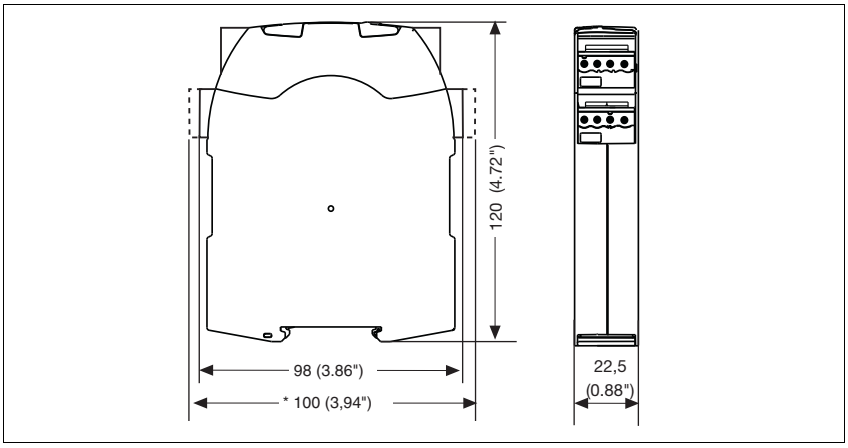

Pilz GmbH & Co. KG, Felix-Wankel-Straße 2, 73760 Ostfildern, Germany
Telephone: +49 711 3409-0, Telefax: +49 711 3409-133, E-Mail: pilz.gmbh@pilz.de

Up to PL c of EN ISO 13849-1
PNOZ s6.1

NOTICE

This data sheet is only intended for use during configuration. Please refer to the operating manual for installation and operation.

Service life graph

The service life graphs indicate the number of cycles from which failures due to wear must be expected. The wear is mainly caused by the electrical load; the mechanical load is negligible.

U_B 24 VDC

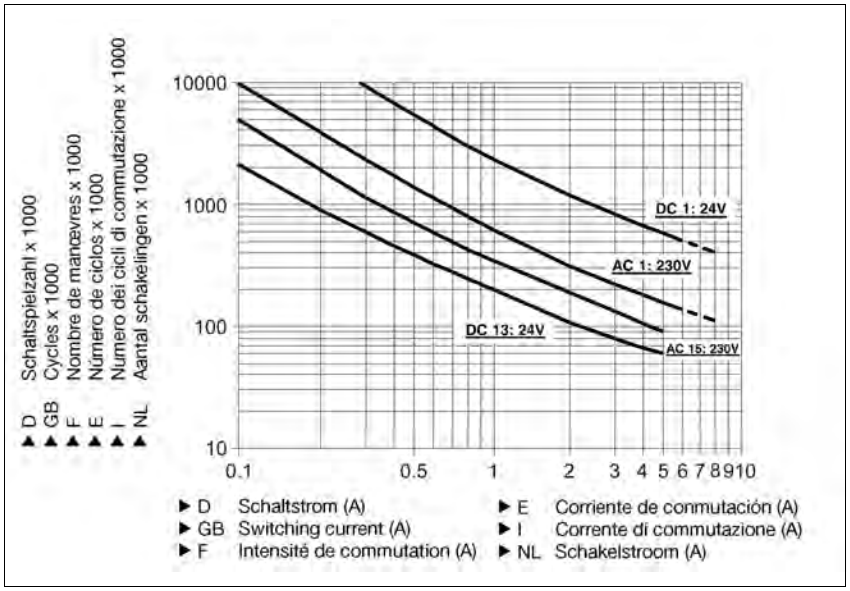

Example
- Inductive load: 0,2 A
- Utilisation category: AC15
- Contact service life: 2,000,000 cycles

Provided the application requires fewer than 2,000,000 cycles, the PFH value (see technical details) can be used in the calculation.
To increase the service life, sufficient spark suppression must be provided on all output contacts. With capacitive loads, any power surges that occur must be noted. With contactors, use freewheel diodes for spark suppression.

Up to PL c of EN ISO 13849-1
PNOZ s6.1

U_B 48-240 VAC/DC

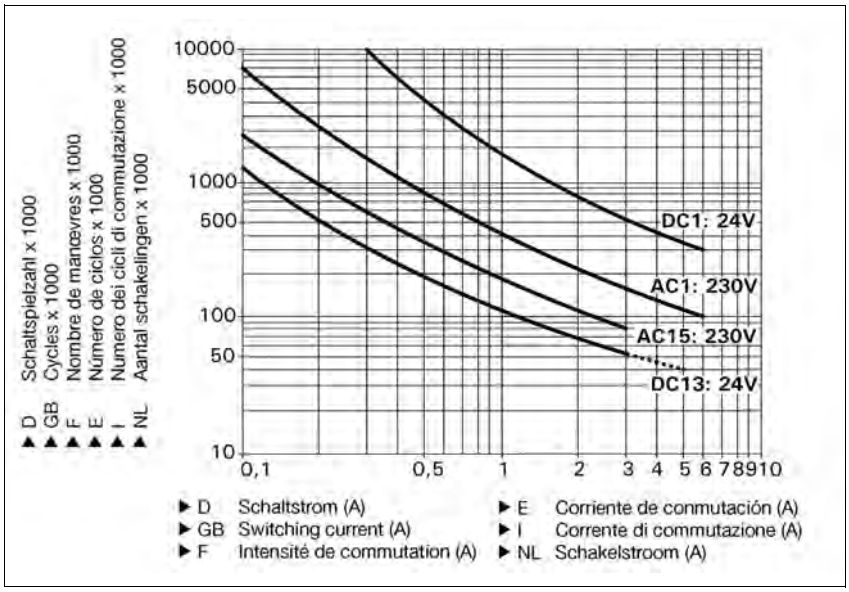

Example
- Inductive load: 0,2 A
- Utilisation category: AC15
- Contact service life: 1,000,000 cycles

Provided the application requires fewer than 1,000,000 cycles, the PFH value (see technical details) can be used in the calculation.

To increase the service life, sufficient spark suppression must be provided on all output contacts. With capacitive loads, any power surges that occur must be noted. With contactors, use freewheel diodes for spark suppression.

Technical details

Electrical data	
Supply voltage	
Supply voltage U_B DC	**24 V**
Supply voltage U_B AC/DC	**48 - 240 V**
Voltage tolerance	**-15 %/+10 %**
Power consumption at U_B AC	**7.0 VA** No. 750156, 751156
Power consumption at U_B DC	**3.5 W**
Frequency range AC	**50 - 60 Hz**
Residual ripple DC	**20 %**
Voltage and current at	
Input circuit DC: **24.0 V**	
N/O contact	**20 mA**
Feedback loop DC: **24.0 V**	**15.0 mA**
Number of output contacts	
Safety contacts (S) instantaneous:	**3**
Auxiliary contacts (N/C):	**1**
Type in accordance with **EN 574**	**III A**

Pilz GmbH & Co. KG, Felix-Wankel-Straße 2, 73760 Ostfildern, Germany
Telephone: +49 711 3409-0, Telefax: +49 711 3409-133, E-Mail: pilz.gmbh@pilz.de

Up to PL c of EN ISO 13849-1
PNOZ s6.1

Electrical data	
Utilisation category in accordance with **EN 60947-4-1**	
Safety contacts: AC1 at **240 V**	I_{min}: **0.01 A** , I_{max}: **6.0 A** P_{max}: **1500 VA**
Safety contacts: DC1 at **24 V**	I_{min}: **0.01 A** , I_{max}: **6.0 A** P_{max}: **150 W**
Auxiliary contacts: AC1 at **240 V**	I_{min}: **0.01 A** , I_{max}: **6.0 A** P_{max}: **1500 VA**
Auxiliary contacts: DC1 at **24 V**	I_{min}: **0.01 A** , I_{max}: **6.0 A** P_{max}: **150 W**
Utilisation category in accordance with **EN 60947-5-1**	
Safety contacts: AC15 at **230 V**	I_{max}: **3.0 A** No. 750156, 751156 **5.0 A** No. 750126, 751126
Safety contacts: DC13 at **24 V** (6 cycles/min)	I_{max}: **4.0 A** No. 750156, 751156 **5.0 A** No. 750126, 751126
Auxiliary contacts: AC15 at **230 V**	I_{max}: **3.0 A** No. 750156, 751156 **5.0 A** No. 750126, 751126
Auxiliary contacts: DC13 at **24 V** (6 cycles/min)	I_{max}: **4.0 A** No. 750156, 751156 **5.0 A** No. 750126, 751126
Contact material	**AgCuNi + 0.2 µm Au**
External contact fuse protection (I_K = 1 kA) to **EN 60947-5-1**	
Blow-out fuse, quick	
Safety contacts:	**10 A** No. 750126, 751126 **6 A** No. 750156, 751156
Auxiliary contacts:	**10 A** No. 750126, 751126 **6 A** No. 750156, 751156
Blow-out fuse, slow	
Safety contacts:	**4 A** No. 750156, 751156 **6 A** No. 750126, 751126
Auxiliary contacts:	**4 A** No. 750156, 751156 **6 A** No. 750126, 751126
Circuit breaker 24 VAC/DC, characteristic B/C	
Safety contacts:	**4 A** No. 750156, 751156 **6 A** No. 750126, 751126
Auxiliary contacts:	**4 A** No. 750156, 751156 **6 A** No. 750126, 751126
Semiconductor outputs (short circuit proof)	**24.0 V** DC,**20 mA**
Max. overall cable resistance R_{lmax} per input circuit	**30 Ohm**
Safety-related characteristic data	
PL in accordance with **EN ISO 13849-1: 2006**	
E-STOP/safety gate function	**PL e** (**Cat. 4**)
Two-hand function	**PL c** (**Cat. 1**)
Category in accordance with **EN 954-1**	
E-STOP/safety gate function	**Cat. 4**
Two-hand function	**Cat. 1**
SIL CL in accordance with **EN IEC 62061**	
E-STOP/safety gate function	**SIL CL 3**
Two-hand function	**SIL CL 1**
PFH in accordance with **EN IEC 62061**	
E-STOP/safety gate function	**2.62E-09**
Two-hand function	**5.99E-08**
SIL in accordance with **IEC 61511**	
E-STOP/safety gate function	**SIL 3**
Two-hand function	**SIL 1**
PFD in accordance with **IEC 61511**	
E-STOP/safety gate function	**3.32E-05**
Two-hand function	**5.10E-03**
T_M [year] in accordance with **EN ISO 13849-1: 2006**	**20**

Up to PL c of EN ISO 13849-1
PNOZ s6.1

Times	
Delay-on de-energisation (reaction time in accordance with EN 574)	
N/O contact	**40 ms**
N/C contact	**50 ms**
Recovery time	**250 ms**
Simultaneity, channel 1 and 2	**0.5 s**
Supply interruption before de-energisation	**20 ms**
Environmental data	
EMC	**EN 60947-5-1**, **EN 61000-6-2**, **EN 61000-6-4**
Vibration to **EN 60068-2-6**	
Frequency	**10 - 55 Hz**
Amplitude	**0.35 mm**
Climatic suitability	**EN 60068-2-78**
Airgap creepage in accordance with **EN 60947-1**	
Pollution degree	**2**
Overvoltage category	**III / II**
Rated insulation voltage	**250 V**
Rated impulse withstand voltage	**4.00 kV**
Ambient temperature	**-10 - 55 °C**
Storage temperature	**-40 - 85 °C**
Protection type	
Mounting (e.g. cabinet)	**IP54**
Housing	**IP40**
Terminals	**IP20**
Mechanical data	
Housing material	
Housing	**PC**
Front	**PC**
Cross section of external conductors with screw terminals	
1 core flexible	**0.25 - 2.50 mm² , 24 - 12 AWG** No. 750126, 750156
2 core, same cross section, flexible:	
with crimp connectors, without insulating sleeve	**0.25 - 1.00 mm² , 24 - 16 AWG** No. 750126, 750156
without crimp connectors or with TWIN crimp connectors	**0.20 - 1.50 mm² , 24 - 16 AWG** No. 750126, 750156
Torque setting with screw terminals	**0.50 Nm** No. 750126, 750156
Cross section of external conductors with spring-loaded terminals: Flexible with/without crimp connectors	**0.20 - 2.50 mm² , 24 - 12 AWG** No. 751126, 751156
Spring-loaded terminals: Terminal points per connection	**2** No. 751126, 751156
Stripping length	**9 mm** No. 751126, 751156
Dimensions	
Height	**100.0 mm** No. 751126, 751156 **98.0 mm** No. 750126, 750156
Width	**22.5 mm**
Depth	**120.0 mm**
Weight	**190 g** No. 750126, 751126 **210 g** No. 750156, 751156

No. stands for order number.

It is essential to consider the relay's service life graphs. The relay outputs' safety-related characteristic data is only valid if the values in the service life graphs are met.

The PFH value depends on the switching frequency and the load on the relay output.
If the service life graphs are not accessible, the stated PFH value can be used irrespective of the switching frequency and the load, as the PFH value already considers the relay's B10d value as well as the failure rates of the other components.

All the units used within a safety function must be considered when calculating the safety characteristic data.

Pilz GmbH & Co. KG, Felix-Wankel-Straße 2, 73760 Ostfildern, Germany
Telephone: +49 711 3409-0, Telefax: +49 711 3409-133, E-Mail: pilz.gmbh@pilz.de

Up to PL c of EN ISO 13849-1
PNOZ s6.1

INFORMATION
A safety function's SIL/PL values are **not** identical to the SIL/PL values of the units that are used and may be different. We recommend that you use the PAScal software tool to calculate the safety function's SIL/PL values.

The standards current on **2011-06** apply.

Conventional thermal current while loading several contacts

Number of contacts	I_{th} per contact at U_B DC	I_{th} at U_B AC
1	**6.00 A**	**6.00 A** No. 750156, 751156
2	**6.00 A**	**6.00 A** No. 750156, 751156
3	**4.50 A** No. 750156, 751156 **6.00 A** No. 750126, 751126	**4.50 A** No. 750156, 751156

Order reference

Type	Features		Terminals	Order no.
PNOZ s6.1		24 VDC	With screw terminals	750 126
PNOZ s6.1 C		24 VDC	With spring-loaded terminals	751 126
PNOZ s6.1	48 – 240 VAC/DC		With screw terminals	750 156
PNOZ s6.1 C	48 – 240 VAC/DC		With spring-loaded terminals	751 156

Up to PL e of EN ISO 13849-1
PNOZ s7



Contact expansion module for increasing the number of available contacts

Approvals

	PNOZ s7
c UL us LISTED	◆
TÜV SÜD	◆
CCC	◆

Unit features

- Positive-guided relay outputs:
  - 4 safety contacts (N/O), instantaneous
  - 1 auxiliary contact (N/C), instantaneous
- Safe separation of safety contacts 13-14, 23-24, 33-34 from all other circuits
- LED indicator for:
  - Input status, channel 1
  - Input status, channel 2
  - Switch status of the safety contacts
  - Error
- Plug-in connection terminals (either spring-loaded terminal or screw terminal)

Unit description

The unit meets the requirements of EN 60947-5-1, EN 60204-1 and VDE 0113-1. The contact expansion module is used to increase the number of instantaneous safety contacts available on a base unit. Base units are all safety relays with feedback loop monitoring.
The category that can be achieved in accordance with EN 954-1 and EN ISO 13849-1 depends on the category of the base unit. The contact expansion module may not exceed this.

Safety features

The unit meets the following safety requirements:

- The contact expansion module expands an existing circuit. As the output relays are monitored via the base unit's feedback loop, the safety functions on the existing circuit are transferred to the contact expansion module.
- The safety function remains effective in the case of a component failure.
- Earth fault in the feedback loop: Detected, depending on the base unit that is used.
- Earth fault in the input circuit: The output relays de-energise and the safety contacts open.

Block diagram

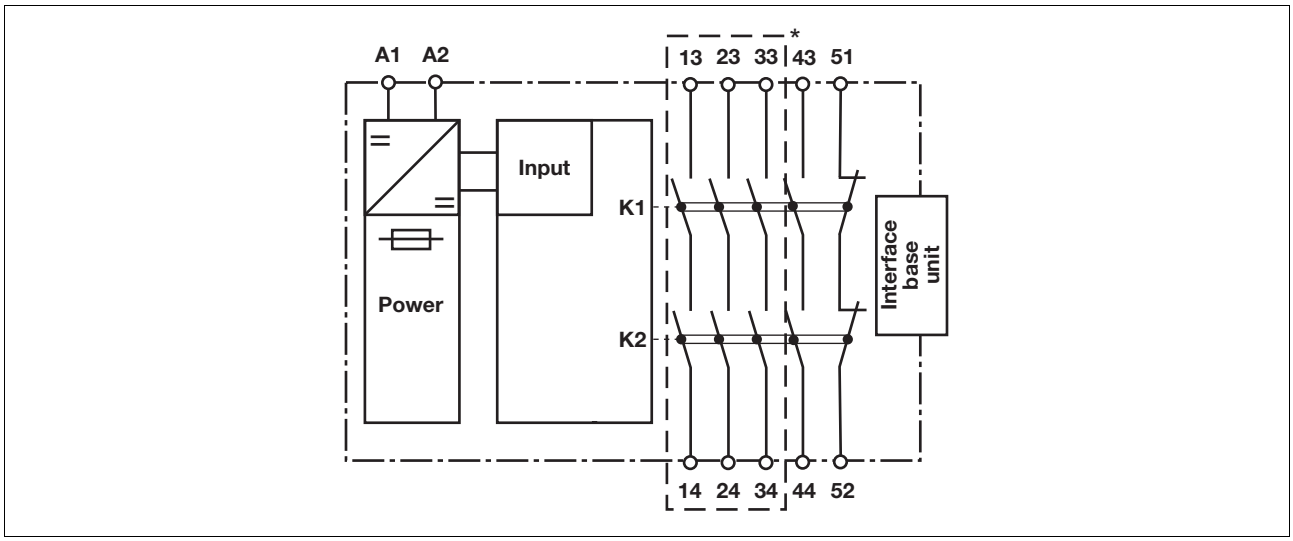

* Safe separation in accordance with EN 60947-1, 6 kV

Pilz GmbH & Co. KG, Felix-Wankel-Straße 2, 73760 Ostfildern, Germany
Telephone: +49 711 3409-0, Telefax: +49 711 3409-133, E-Mail: pilz.gmbh@pilz.de
1001987-EN-04-2011-09

Up to PL e of EN ISO 13849-1
PNOZ s7

Function description

with PNOZsigma base unit:
- Dual-channel operation via PNOZsigma connector

without PNOZsigma base unit:
- Single-channel operation: one input circuit affects the output relays

Timing diagram

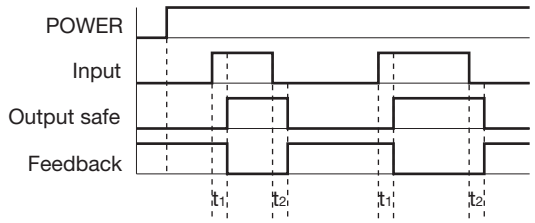

Key
- Power: Supply voltage
- Input: Input circuits A1
- Output safe: Safety contacts 13-14, 23-24, 33-34, 43-44
- Feedback: Feedback loop 51-52
- t_1: Switch-on delay
- t_2: Delay-on de-energisation

Wiring

Please note:
- Information given in the “Technical details” must be followed.
- Outputs 13-14, 23-24, 33-34, 43-44 are safety contacts, output 51-52 is an auxiliary contact (e.g. for display).
- To prevent contact welding, a fuse should be connected before the output contacts (see technical details).
- Calculation of the max. cable runs l_{max} in the input circuit:

$$l_{max} = \frac{R_{lmax}}{R_l / km}$$

R_{lmax} = max. overall cable resistance (see technical details)
R_l /km = cable resistance/km
- Use copper wire that can withstand 60/75 °C.
- Sufficient fuse protection must be provided on all output contacts with capacitive and inductive loads.

Up to PL e of EN ISO 13849-1
PNOZ s7

Preparing for operation

- Supply voltage

Supply voltage	AC	DC
		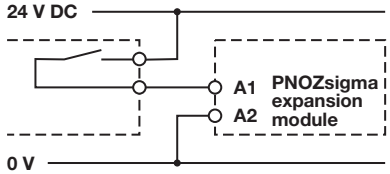

- Input circuit

Input circuit	Single-channel	Dual-channel
Base unit: Safety relay PNOZ X	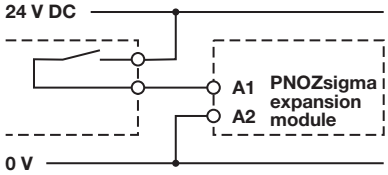	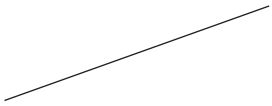
Base unit: Safety relay PNOZelog Driven via semiconductor outputs (24 VDC)	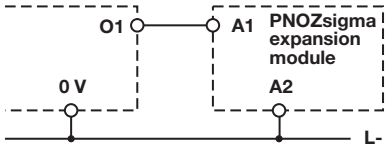	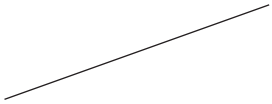

- Feedback circuit

Feedback circuit	Base unit: Safety relay PNOZ X	Base unit: Safety relay PNOZelog
The inputs that evaluate the feedback loop will depend on the base unit and application	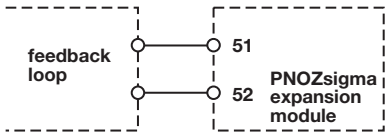	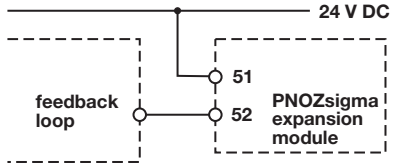

- Connection to PNOZsigma base unit

	Base unit: Safety relay PNOZsigma
The feedback loop is connected and evaluated via the connector	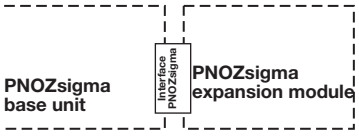

INFORMATION
If a base unit and a contact expander module from the PNOZsigma range are connected via the connector, no additional wiring is necessary.

Do not connect A1 to the contact expander module!

Pilz GmbH & Co. KG, Felix-Wankel-Straße 2, 73760 Ostfildern, Germany
Telephone: +49 711 3409-0, Telefax: +49 711 3409-133, E-Mail: pilz.gmbh@pilz.de

Up to PL e of EN ISO 13849-1
PNOZ s7

Terminal configuration

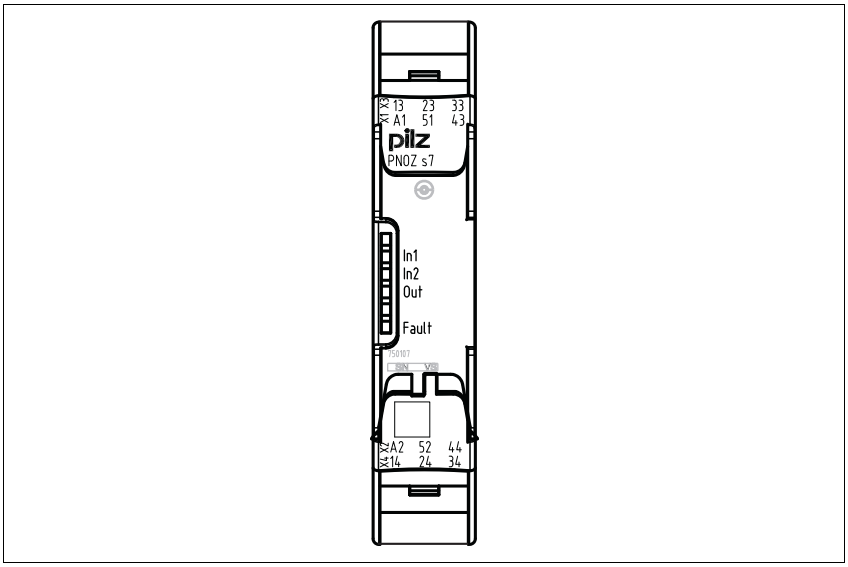

Installation

Install contact expander module without base unit:

- Ensure that the plug terminator is inserted at the side of the unit.

Connect base unit and PNOZsigma contact expander module:

- Remove the plug terminator at the side of the base unit and at the contact expander module
- Connect the base unit and the contact expander module to the supplied connector before mounting the units to the DIN rail.

Installation in control cabinet

- The safety relay should be installed in a control cabinet with a protection type of at least IP54.
- Use the notch on the rear of the unit to attach it to a DIN rail (35 mm).
- When installed vertically: Secure the unit by using a fixing element (e.g. retaining brakket or end angle).
- Push the unit upwards or downwards before lifting it from the DIN rail.

Dimensions

*with spring-loaded terminals

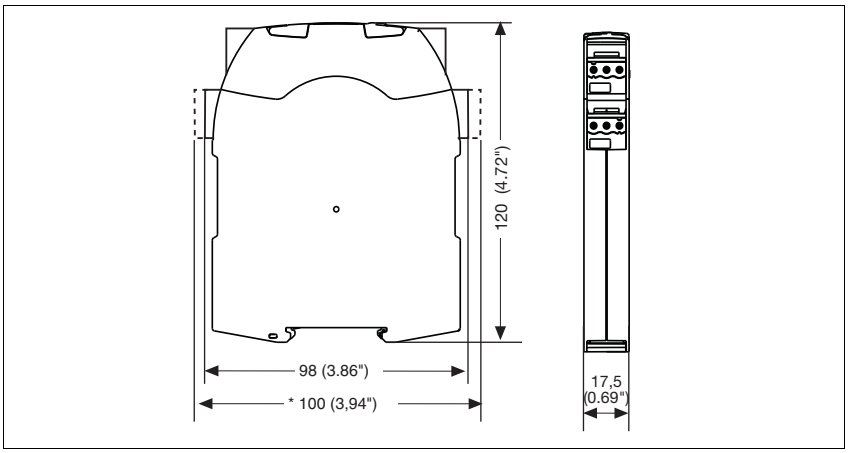

Up to PL e of EN ISO 13849-1
PNOZ s7

NOTICE

This data sheet is only intended for use during configuration. Please refer to the operating manual for installation and operation.

Service life graph

The service life graphs indicate the number of cycles from which failures due to wear must be expected. The wear is mainly caused by the electrical load; the mechanical load is negligible.

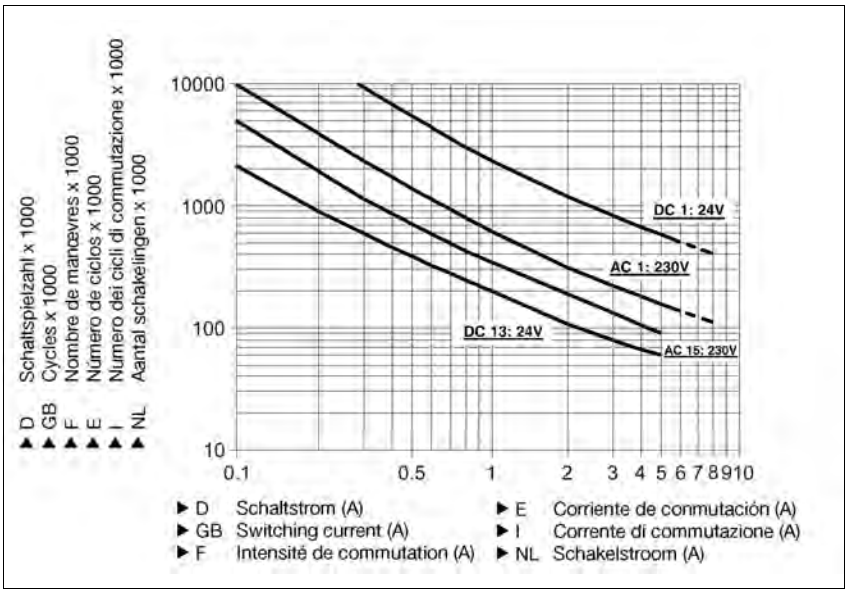

Example
- Inductive load: 0,2 A
- Utilisation category: AC15
- Contact service life: 2,000,000 cycles

Provided the application requires fewer than 2,000,000 cycles, the PFH value (see technical details) can be used in the calculation.

To increase the service life, sufficient spark suppression must be provided on all output contacts. With capacitive loads, any power surges that occur must be noted. With contactors, use freewheel diodes for spark suppression.

Technical details

Electrical data	
Supply voltage	
Supply voltage U_B DC	**24 V**
Voltage tolerance	**-20 %/+20 %**
Power consumption at U_B DC	**2.0 W**
Residual ripple DC	**20 %**
Voltage and current at	
Input circuit DC: **24.0 V**	**70.0 mA**
Number of output contacts	
Safety contacts (S) instantaneous:	**4**
Auxiliary contacts (N/C):	**1**

Pilz GmbH & Co. KG, Felix-Wankel-Straße 2, 73760 Ostfildern, Germany
Telephone: +49 711 3409-0, Telefax: +49 711 3409-133, E-Mail: pilz.gmbh@pilz.de

Up to PL e of EN ISO 13849-1
PNOZ s7

Electrical data	
Utilisation category in accordance with **EN 60947-4-1**	
Safety contacts: AC1 at **240 V**	I_{min}: **0.01 A** , I_{max}: **6.0 A** P_{max}: **1500 VA**
Safety contacts: DC1 at **24 V**	I_{min}: **0.01 A** , I_{max}: **6.0 A** P_{max}: **150 W**
Auxiliary contacts: AC1 at **240 V**	I_{min}: **0.01 A** , I_{max}: **2.0 A** P_{max}: **500 VA**
Auxiliary contacts: DC1 at **24 V**	I_{min}: **0.01 A** , I_{max}: **2.0 A** P_{max}: **50 W**
Utilisation category in accordance with **EN 60947-5-1**	
Safety contacts: AC15 at **230 V**	I_{max}: **5.0 A**
Safety contacts: DC13 at **24 V** (6 cycles/min)	I_{max}: **5.0 A**
Auxiliary contacts: AC15 at **230 V**	I_{max}: **2.0 A**
Auxiliary contacts: DC13 at **24 V** (6 cycles/min)	I_{max}: **2.0 A**
Contact material	**AgCuNi + 0.2 µm Au**
External contact fuse protection (I_K = 1 kA) to **EN 60947-5-1**	
Blow-out fuse, quick	
Safety contacts:	**10 A**
Auxiliary contacts:	**4 A**
Blow-out fuse, slow	
Safety contacts:	**6 A**
Auxiliary contacts:	**2 A**
Circuit breaker 24 VAC/DC, characteristic B/C	
Safety contacts:	**6 A**
Auxiliary contacts:	**2 A**
Max. overall cable resistance R_{lmax} input circuits, reset circuits	
single-channel at U_B DC	**30 Ohm**
Safety-related characteristic data	
PL in accordance with **EN ISO 13849-1: 2006**	**PL e** (**Cat. 4**)
Category in accordance with **EN 954-1**	**Cat. 4**
SIL CL in accordance with **EN IEC 62061**	**SIL CL 3**
PFH in accordance with **EN IEC 62061**	**2.31E-09**
SIL in accordance with **IEC 61511**	**SIL 3**
PFD in accordance with **IEC 61511**	**2.03E-06**
T_M [year] in accordance with **EN ISO 13849-1: 2006**	**20**
Times	
Switch-on delay	
with automatic reset after power on typ.	**30 ms**
with automatic reset after power on max.	**50 ms**
Delay-on de-energisation	
with E-STOP typ.	**18 ms**
with E-STOP max.	**30 ms**
with power failure typ.	**18 ms**
with power failure max.	**30 ms**
Environmental data	
EMC	**EN 60947-5-1**, **EN 61000-6-2**, **EN 61000-6-4**
Vibration to **EN 60068-2-6**	
Frequency	**10 - 55 Hz**
Amplitude	**0.35 mm**
Climatic suitability	**EN 60068-2-78**
Airgap creepage in accordance with **EN 60947-1**	
Pollution degree	**2**
Overvoltage category	**III**
Rated insulation voltage	**250 V**
Rated impulse withstand voltage	**6.00 kV**
Ambient temperature	**-10 - 55 °C**

Up to PL e of EN ISO 13849-1
PNOZ s7

Environmental data	
Storage temperature	**-40 - 85 °C**
Protection type	
Mounting (e.g. cabinet)	**IP54**
Housing	**IP40**
Terminals	**IP20**
Mechanical data	
Housing material	
Housing	**PC**
Front	**PC**
Cross section of external conductors with screw terminals	
1 core flexible	**0.25 - 2.50 mm² , 24 - 12 AWG** No. 750107
2 core, same cross section, flexible:	
with crimp connectors, without insulating sleeve	**0.25 - 1.00 mm² , 24 - 16 AWG** No. 750107
without crimp connectors or with TWIN crimp connectors	**0.20 - 1.50 mm² , 24 - 16 AWG** No. 750107
Torque setting with screw terminals	**0.50 Nm** No. 750107
Cross section of external conductors with spring-loaded terminals: Flexible with/without crimp connectors	**0.20 - 2.50 mm² , 24 - 12 AWG** No. 751107, 751187
Spring-loaded terminals: Terminal points per connection	**2** No. 751107, 751187
Stripping length	**9 mm** No. 751107, 751187
Dimensions	
Height	**102.0 mm** No. 751107, 751187 **98.0 mm** No. 750107
Width	**17.5 mm**
Depth	**120.0 mm**
Weight	**170 g**

No. stands for order number.

It is essential to consider the relay's service life graphs. The relay outputs' safety-related characteristic data is only valid if the values in the service life graphs are met.

The PFH value depends on the switching frequency and the load on the relay output.
If the service life graphs are not accessible, the stated PFH value can be used irrespective of the switching frequency and the load, as the PFH value already considers the relay's B10d value as well as the failure rates of the other components.

All the units used within a safety function must be considered when calculating the safety characteristic data.

INFORMATION
A safety function's SIL/PL values are **not** identical to the SIL/PL values of the units that are used and may be different. We recommend that you use the PAScal software tool to calculate the safety function's SIL/PL values.

The standards current on **2006-04** apply.

Pilz GmbH & Co. KG, Felix-Wankel-Straße 2, 73760 Ostfildern, Germany
Telephone: +49 711 3409-0, Telefax: +49 711 3409-133, E-Mail: pilz.gmbh@pilz.de

Up to PL e of EN ISO 13849-1
PNOZ s7

Conventional thermal current while loading several contacts

Number of contacts	I_{th} per contact at U_B DC
1	**6.00 A**
2	**5.50 A**
3	**4.50 A**
4	**4.00 A**

Order reference

Type	Features		Terminals	Order no.
PNOZ s7		24 VDC	With screw terminal	750 107
PNOZ s7 C		24 VDC	With spring-loaded terminal	751 107
PNOZ s7 C (coated version)		24 VDC	With spring-loaded terminal	751 187

Up to PL e of EN ISO 13849-1
PNOZ s7.1



Contact expansion module for increasing the number of available contacts

Approvals

	PNOZ s7.1
c UL us LISTED	◆
TÜV	◆
CCC	◆

Unit features

- Positive-guided relay outputs:
  - 3 safety contacts (N/O), instantaneous
- Safe separation of safety contacts 13-14, 23-24, 33-34 from all other circuits
- Supply voltage for expansion modules
- LED for:
  - Supply voltage at B1 and B2
  - Input status, channel 1
  - Input status, channel 2
  - Switch status of the safety contacts
  - Error
- Plug-in connection terminals (either spring-loaded terminals or screw terminals)

Unit description

The unit meets the requirements of EN 60947-5-1, EN 60204-1 and VDE 0113-1. The contact expansion module is used to increase the number of instantaneous safety contacts available on a base unit. Base units are all safety relays with feedback loop monitoring.

The category that can be achieved in accordance with EN 954-1 and EN ISO 13849-1 depends on the category of the base unit. The contact expansion module may not exceed this.

Safety features

The unit meets the following safety requirements:

- The contact expansion module expands an existing circuit. As the output relays are monitored via the base unit's feedback loop, the safety functions on the existing circuit are transferred to the contact expansion module.
- The safety function remains effective in the case of a component failure.
- Earth fault in the feedback loop: Detected, depending on the base unit that is used.
- Earth fault in the input circuit: The output relays de-energise and the safety contacts open.

Block diagram

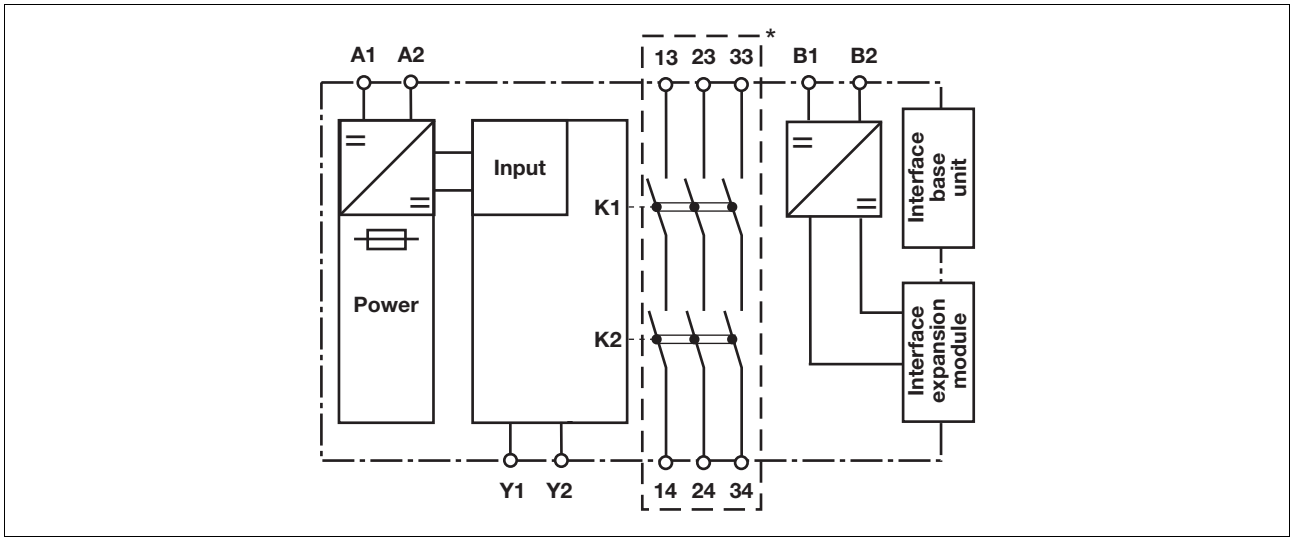

* Safe separation in accordance with EN 60947-1, 6 kV

Pilz GmbH & Co. KG, Felix-Wankel-Straße 2, 73760 Ostfildern, Germany
Telephone: +49 711 3409-0, Telefax: +49 711 3409-133, E-Mail: pilz.gmbh@pilz.de

1001988-EN-04-2011-09

Up to PL e of EN ISO 13849-1
PNOZ s7.1

Function description

with PNOZsigma base unit:
- Dual-channel operation via PNOZsigma connector

without PNOZsigma base unit:
- Single-channel operation: one input circuit affects the output relays

with PNOZsigma s7.2 expander units:
- Dual-channel operation and supply voltage via PNOZsigma connector

Timing diagram

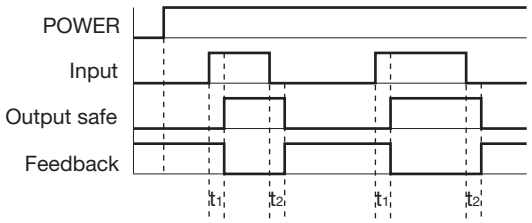

Key
- Power: Supply voltage
- Input: Input circuits
- Output safe: Safety contacts
- Feedback: Feedback loop 51-52
- t_1: Switch-on delay
- t_2: Delay-on de-energisation

Wiring

Please note:
- Information given in the “Technical details” must be followed.
- Outputs are safety contacts.
- To prevent contact welding, a fuse should be connected before the output contacts (see technical details).
- Calculation of the max. cable runs l_{max} in the input circuit:

$$l_{max} = \frac{R_{lmax}}{R_l / km}$$

R_{lmax} = max. overall cable resistance (see technical details)
R_l /km = cable resistance/km

- Use copper wire that can withstand 60/75 °C.
- Sufficient fuse protection must be provided on all output contacts with capacitive and inductive loads.

Up to PL e of EN ISO 13849-1
PNOZ s7.1

Preparing for operation

- Supply voltage

Supply voltage	AC	DC
Base unit: Safety relay PNOZsigma		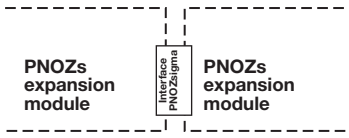
Base unit: Safety relay PNOZ X		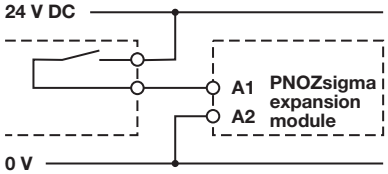
Supply voltage for expansion modules PNOZsigma		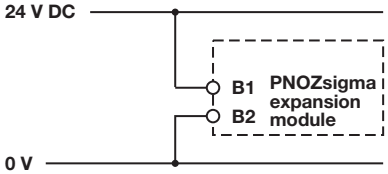

- Input circuit

Input circuit	Single-channel	Dual-channel
Base unit: Safety relay PNOZsigma		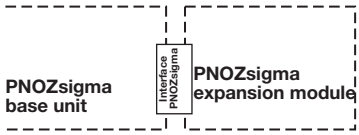
Base unit: Safety relay PNOZ X	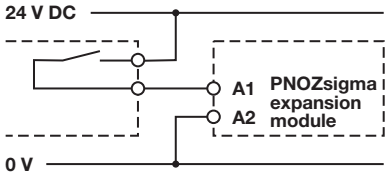	
Base unit: Safety relay PNOZelog Driven via semiconductor outputs (24 VDC)	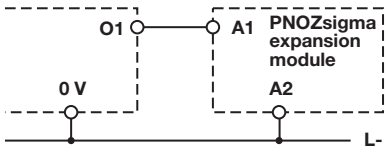	

Pilz GmbH & Co. KG, Felix-Wankel-Straße 2, 73760 Ostfildern, Germany
Telephone: +49 711 3409-0, Telefax: +49 711 3409-133, E-Mail: pilz.gmbh@pilz.de

Up to PL e of EN ISO 13849-1
PNOZ s7.1

- Reset circuit/feedback loop

Reset circuit/feedback loop	Base unit: Safety relay PNOZ X	Base unit: Safety relay PNOZelog
The inputs that evaluate the feedback loop will depend on the base unit and application	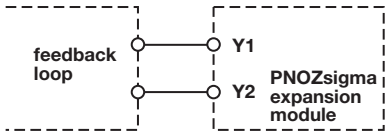	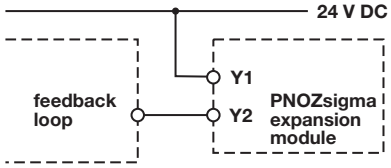

- Connection to PNOZsigma base unit

	Base unit: Safety relay PNOZsigma
The feedback loop is connected and evaluated via the connector.	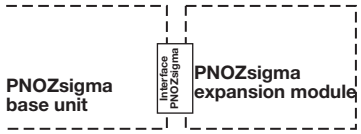

INFORMATION
If a base unit and a contact expansion module from the PNOZsigma range are linked via the connector, no additional wiring is necessary.
Do not connect A1 und Y1/Y2 to the expansion module!

Up to PL e of EN ISO 13849-1
PNOZ s7.1

Terminal configuration

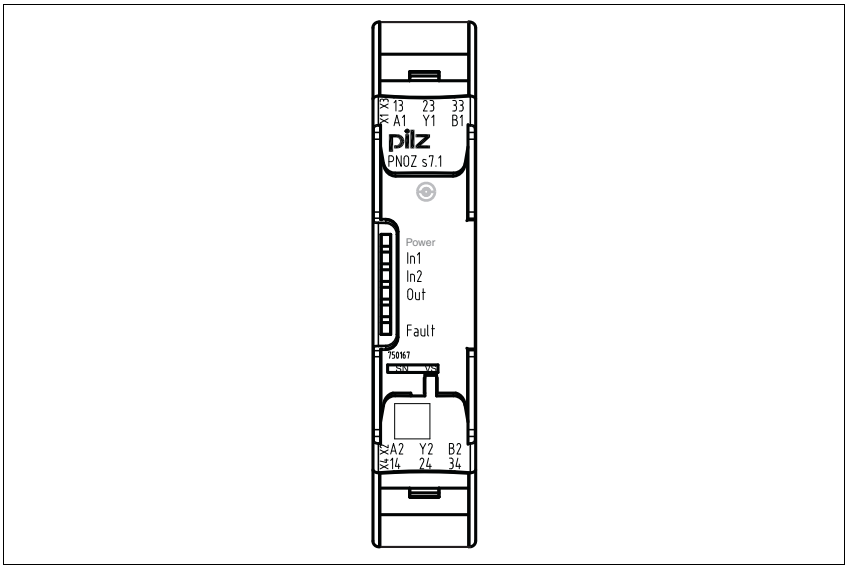

Installation

Install contact expansion module without base unit:

- Ensure that the plug terminator is inserted at the side of the unit.

Connect base unit and contact expansion module PNOZ s7.1:

- Remove the plug terminator at the side of the base unit and at the left of the contact expansion module
- Connect the base unit and the contact expansion module using the connector supplied, before mounting the units to the DIN rail.

Connect contact expansion module PNOZ s7.1 to PNOZsigma contact expansion modules

- Connect the contact expansion modules using the connector supplied.

Control cabinet installation

- The safety relay should be installed in a control cabinet with a protection type of at least IP54.
- Use the notch on the rear of the unit to attach it to a DIN rail (35 mm).
- When installed vertically: Secure the unit by using a fixing element (e.g. retaining brakket or end angle).

Push the unit upwards or downwards before lifting it from the DIN rail.

Expansion options	Please note the max. power consumption of the contact expansion modules (see Technical data PNOZ s7.1).
①: Base unit ②: Contact expansion module PNOZ s7.1 ③: Contact expansion module PNOZ s7.2 ④: Contact expansion module PNOZ s7.2 with terminator	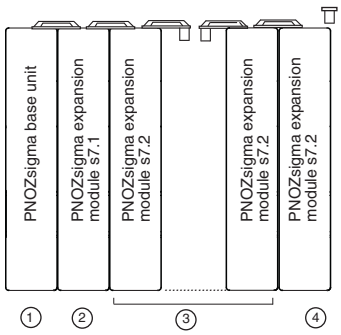

Pilz GmbH & Co. KG, Felix-Wankel-Straße 2, 73760 Ostfildern, Germany
Telephone: +49 711 3409-0, Telefax: +49 711 3409-133, E-Mail: pilz.gmbh@pilz.de

Up to PL e of EN ISO 13849-1
PNOZ s7.1

①: Base unit ②: Contact expansion module PNOZ s7.1 ③: Contact expansion module PNOZ s7.2 ④: Contact expansion module PNOZ s7, s8, s9, s10, s11 as terminator	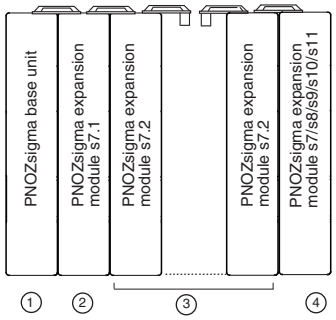
①: Contact expansion module PNOZ s7.1 with terminator ②: Contact expansion module PNOZ s7.2 ③: Contact expansion module PNOZ s7.2 with terminator	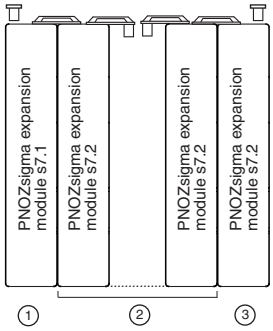
①: Contact expansion module PNOZ s7.1 with terminator ②: Contact expansion module PNOZ s7.2 ③: Contact expansion module PNOZ s7, s8, s9, s10, s11 as terminator	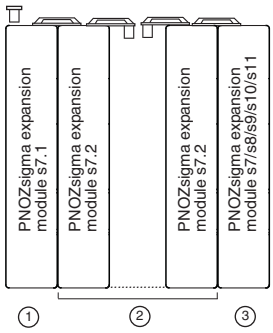
①: Base unit ②: Contact expansion module PNOZ s7.1 ③: Contact expansion module PNOZ s7.2 ④: Contact expansion module PNOZ s7.1 ⑤: Contact expansion module PNOZ s7.2 ⑥: Contact expansion module PNOZ s7.2 with terminator	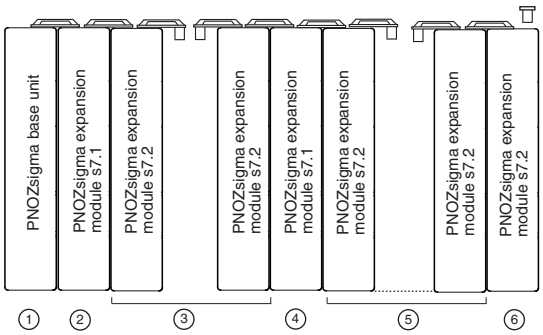

Up to PL e of EN ISO 13849-1
PNOZ s7.1

Dimensions

*with spring-loaded terminals

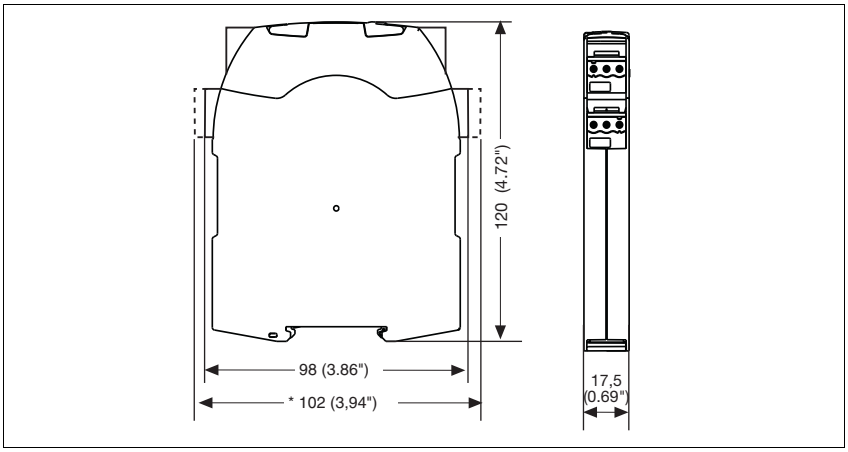

Pilz GmbH & Co. KG, Felix-Wankel-Straße 2, 73760 Ostfildern, Germany
Telephone: +49 711 3409-0, Telefax: +49 711 3409-133, E-Mail: pilz.gmbh@pilz.de

Up to PL e of EN ISO 13849-1
PNOZ s7.1

NOTICE

This data sheet is only intended for use during configuration. Please refer to the operating manual for installation and operation.

Service life graph

The service life graphs indicate the number of cycles from which failures due to wear must be expected. The wear is mainly caused by the electrical load; the mechanical load is negligible.

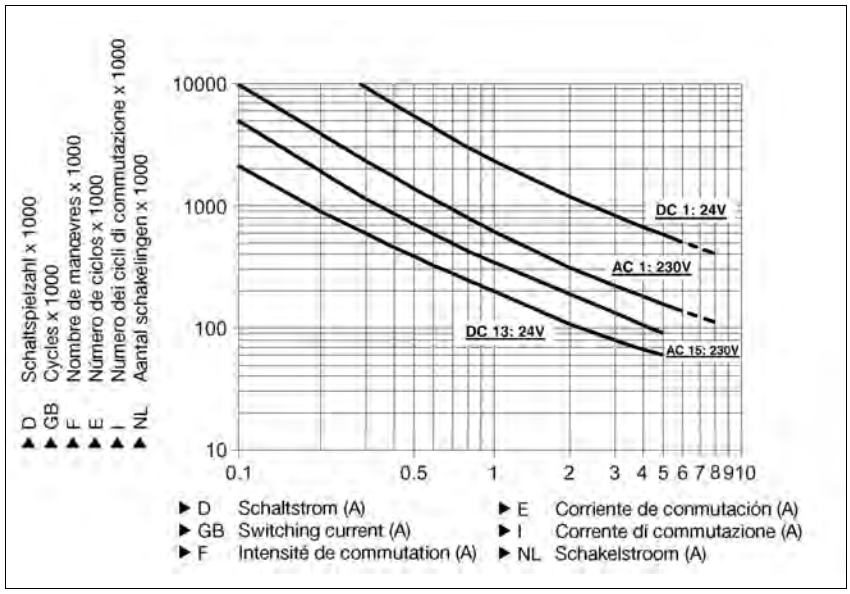

Example
- Inductive load: 0,2 A
- Utilisation category: AC15
- Contact service life: 2,000,000 cycles

Provided the application requires fewer than 2,000,000 cycles, the PFH value (see technical details) can be used in the calculation.

To increase the service life, sufficient spark suppression must be provided on all output contacts. With capacitive loads, any power surges that occur must be noted. With contactors, use freewheel diodes for spark suppression.

Technical details	
Electrical data	
Supply voltage	
Supply voltage U_B DC	**24 V**
Voltage tolerance	**-20 %/+20 %**
Power consumption at U_B DC	**2.0 W**
Max. output of all expansion modules	**20 W**
Residual ripple DC	**20 %**
Voltage and current at	
Input circuit DC: **24.0 V**	**70.0 mA**
Number of output contacts	
Safety contacts (S) instantaneous:	**3**

Pilz GmbH & Co. KG, Felix-Wankel-Straße 2, 73760 Ostfildern, Germany
Telephone: +49 711 3409-0, Telefax: +49 711 3409-133, E-Mail: pilz.gmbh@pilz.de

Up to PL e of EN ISO 13849-1
PNOZ s7.1

Electrical data	
Utilisation category in accordance with **EN 60947-4-1**	
Safety contacts: AC1 at **240 V**	I_{min}: **0.01 A** , I_{max}: **6.0 A** P_{max}: **1500 VA**
Safety contacts: DC1 at **24 V**	I_{min}: **0.01 A** , I_{max}: **6.0 A** P_{max}: **150 W**
Utilisation category in accordance with **EN 60947-5-1**	
Safety contacts: AC15 at **230 V**	I_{max}: **5.0 A**
Safety contacts: DC13 at **24 V** (6 cycles/min)	I_{max}: **5.0 A**
Contact material	**AgCuNi + 0.2 µm Au**
External contact fuse protection (I_K = 1 kA) to **EN 60947-5-1**	
Blow-out fuse, quick	
Safety contacts:	**10 A**
Blow-out fuse, slow	
Safety contacts:	**6 A**
Circuit breaker 24 VAC/DC, characteristic B/C	
Safety contacts:	**6 A**
Max. overall cable resistance R_{lmax} input circuits, reset circuits	
single-channel at U_B DC	**30 Ohm**
Safety-related characteristic data	
PL in accordance with **EN ISO 13849-1: 2006**	**PL e** (**Cat. 4**)
Category in accordance with **EN 954-1**	**Cat. 4**
SIL CL in accordance with **EN IEC 62061**	**SIL CL 3**
PFH in accordance with **EN IEC 62061**	**2.31E-09**
SIL in accordance with **IEC 61511**	**SIL 3**
PFD in accordance with **IEC 61511**	**2.03E-06**
T_M [year] in accordance with **EN ISO 13849-1: 2006**	**20**
Times	
Switch-on delay	
with automatic reset after power on typ.	**30 ms**
with automatic reset after power on max.	**50 ms**
Delay-on de-energisation	
with E-STOP typ.	**18 ms**
with E-STOP max.	**30 ms**
with power failure typ.	**18 ms**
with power failure max.	**30 ms**
Supply interruption before de-energisation	**5 ms**
Environmental data	
EMC	**EN 60947-5-1**, **EN 61000-6-2**, **EN 61000-6-4**
Vibration to **EN 60068-2-6**	
Frequency	**10 - 55 Hz**
Amplitude	**0.35 mm**
Climatic suitability	**EN 60068-2-78**
Airgap creepage in accordance with **EN 60947-1**	
Pollution degree	**2**
Overvoltage category	**III**
Rated insulation voltage	**250 V**
Rated impulse withstand voltage	**6.00 kV**
Ambient temperature	**-10 - 55 °C**
Storage temperature	**-40 - 85 °C**
Protection type	
Mounting (e.g. cabinet)	**IP54**
Housing	**IP40**
Terminals	**IP20**

Pilz GmbH & Co. KG, Felix-Wankel-Straße 2, 73760 Ostfildern, Germany
Telephone: +49 711 3409-0, Telefax: +49 711 3409-133, E-Mail: pilz.gmbh@pilz.de

Up to PL e of EN ISO 13849-1
PNOZ s7.1

Mechanical data	
Housing material	
Housing	**PC**
Front	**PC**
Cross section of external conductors with screw terminals	
1 core flexible	**0.25 - 2.50 mm² , 24 - 12 AWG** No. 750167
2 core, same cross section, flexible:	
with crimp connectors, without insulating sleeve	**0.25 - 1.00 mm² , 24 - 16 AWG** No. 750167
without crimp connectors or with TWIN crimp connectors	**0.20 - 1.50 mm² , 24 - 16 AWG** No. 750167
Torque setting with screw terminals	**0.50 Nm** No. 750167
Cross section of external conductors with spring-loaded terminals: Flexible with/without crimp connectors	**0.20 - 2.50 mm² , 24 - 12 AWG** No. 751167
Spring-loaded terminals: Terminal points per connection	**2** No. 751167
Stripping length	**9 mm** No. 751167
Dimensions	
Height	**102.0 mm** No. 751167 **98.0 mm** No. 750167
Width	**17.5 mm**
Depth	**120.0 mm**
Weight	**170 g**

No. stands for order number.

It is essential to consider the relay's service life graphs. The relay outputs' safety-related characteristic data is only valid if the values in the service life graphs are met.

The PFH value depends on the switching frequency and the load on the relay output.
If the service life graphs are not accessible, the stated PFH value can be used irrespective of the switching frequency and the load, as the PFH value already considers the relay's B10d value as well as the failure rates of the other components.

All the units used within a safety function must be considered when calculating the safety characteristic data.

INFORMATION
A safety function's SIL/PL values are **not** identical to the SIL/PL values of the units that are used and may be different. We recommend that you use the PAScal software tool to calculate the safety function's SIL/PL values.

The standards current on **2007-10** apply.

Conventional thermal current while loading several contacts	
Number of contacts	I_{th} per contact at U_B DC
1	**6.00 A**
2	**5.50 A**
3	**4.50 A**

Up to PL e of EN ISO 13849-1
PNOZ s7.1

Order reference

Type	Features		Terminals	Order no.
PNOZ s7.1 C		24 VDC	With spring-loaded terminals	751 167
PNOZ s7.1		24 VDC	With screw terminals	750 167

Pilz GmbH & Co. KG, Felix-Wankel-Straße 2, 73760 Ostfildern, Germany
Telephone: +49 711 3409-0, Telefax: +49 711 3409-133, E-Mail: pilz.gmbh@pilz.de

Up to PL e of EN ISO 13849-1
PNOZ s7.2



Contact expansion module for increasing the number of available contacts

Approvals

	PNOZ s7.2
c UL us LISTED	◆
TÜV	◆
CCC	◆

Unit features

- Positive-guided relay outputs:
  - 4 safety contacts (N/O), instantaneous
  - 1 auxiliary contact (N/C), instantaneous
- Safe separation of safety contacts 13-14, 23-24, 33-34 from all other circuits
- Connection options for expansion modules
- LED for:
  - Input status, channel 1
  - Input status, channel 2
  - Switch status of the safety contacts
- Plug-in connection terminals (either spring-loaded terminals or screw terminals)

Unit description

The unit meets the requirements of EN 60947-5-1, EN 60204-1 and VDE 0113-1. The contact expander module is used to increase the number of instantaneous safety contacts available on a base unit. The category that can be achieved in accordance with EN 954-1 and EN ISO 13849-1 depends on the category of the base unit. The contact expander module may not exceed this.

Safety features

The unit meets the following safety requirements:

- The contact expansion module expands an existing circuit. As the output relays are monitored via the base unit's feedback loop, the safety functions on the existing circuit are transferred to the contact expansion module.
- The safety function remains effective in the case of a component failure.
- Earth fault in the feedback loop: Detected, depending on the base unit that is used.
- Earth fault in the input circuit: The output relays de-energise and the safety contacts open.

Block diagram

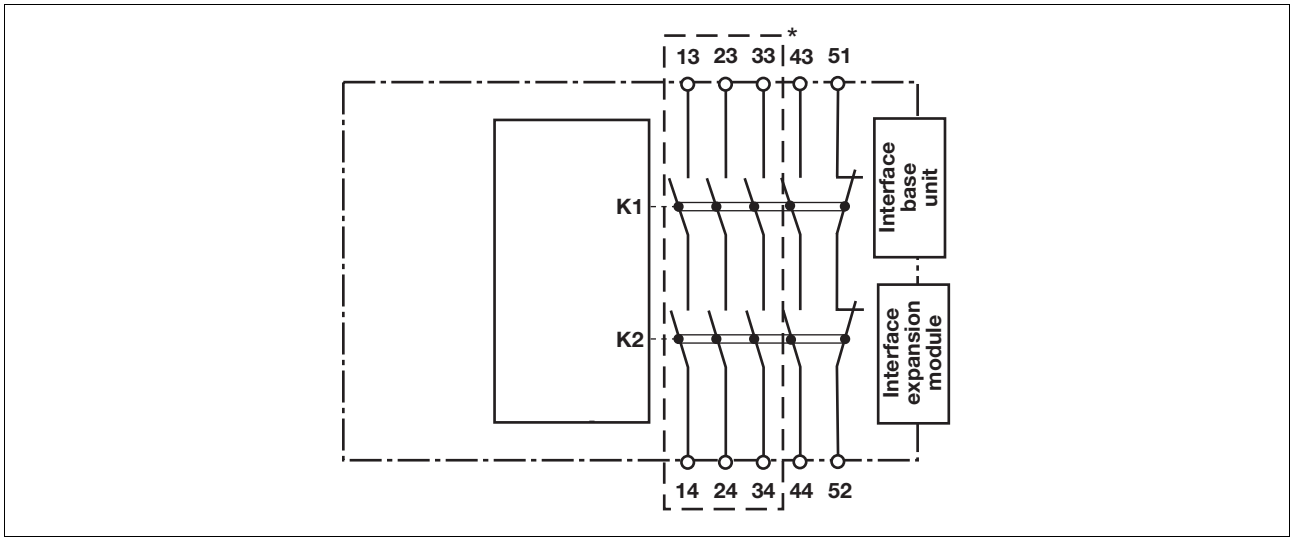

*Safe separation in accordance with EN 60947-1, 6 kV

Pilz GmbH & Co. KG, Felix-Wankel-Straße 2, 73760 Ostfildern, Germany
Telephone: +49 711 3409-0, Telefax: +49 711 3409-133, E-Mail: pilz.gmbh@pilz.de

1001989-EN-04-2011-09

Up to PL e of EN ISO 13849-1
PNOZ s7.2

Function description

with PNOZsigma s7.1:
- Dual-channel operation and supply voltage via PNOZsigma connector

with PNOZsigma expander modules:
- Dual-channel operation and supply voltage via PNOZsigma connector

Timing diagram

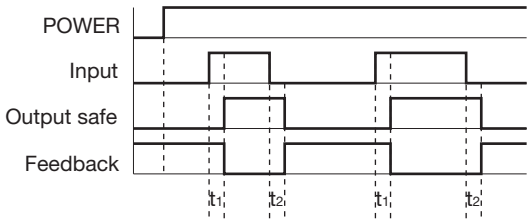

Key
- Power: Supply voltage
- Input: Input circuits
- Output safe: Safety contacts
- Feedback: Feedback loop 51-52
- t_1: Switch-on delay
- t_2: Delay-on de-energisation

Wiring

Please note:
- Information given in the “Technical details” must be followed.
- Outputs are safety contacts, output is an auxiliary contact (e.g. for display).
- To prevent contact welding, a fuse should be connected before the output contacts (see technical details).
- Use copper wire that can withstand 60/75 °C.
- Sufficient fuse protection must be provided on all output contacts with capacitive and inductive loads.

Pilz GmbH & Co. KG, Felix-Wankel-Straße 2, 73760 Ostfildern, Germany
Telephone: +49 711 3409-0, Telefax: +49 711 3409-133, E-Mail: pilz.gmbh@pilz.de

Up to PL e of EN ISO 13849-1
PNOZ s7.2

Preparing for operation

- Supply voltage/input circuit/feedback loop

Supply voltage/input circuit/feedback loop	AC	DC
Contact expansion module PNOZ s7.2	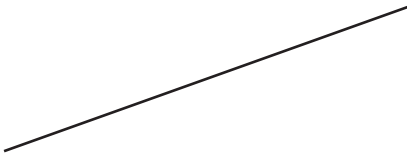	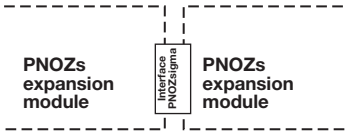

Up to PL e of EN ISO 13849-1
PNOZ s7.2

Terminal configuration

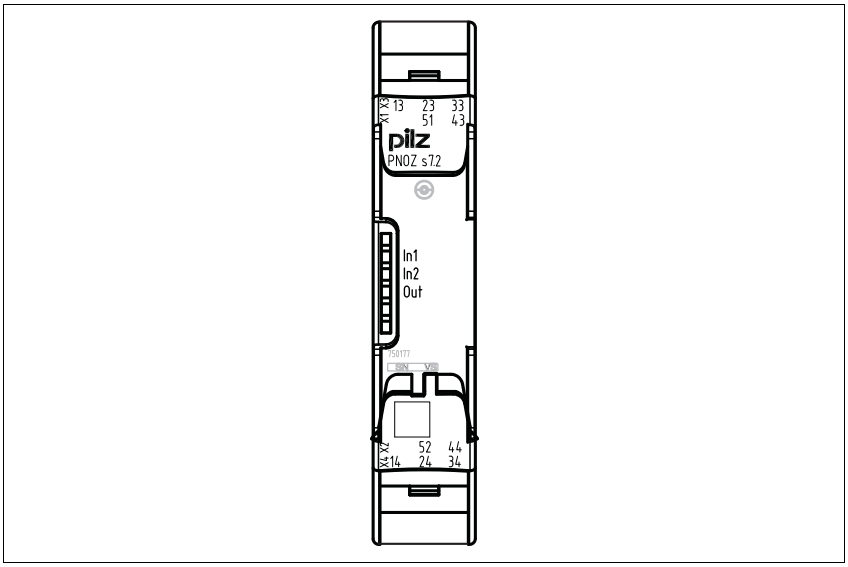

Installation

Connect contact expansion module PNOZ s7.2 to PNOZsigma contact expansion modules

- Connect the contact expansion modules using the connector supplied.

Control cabinet installation

- The safety relay should be installed in a control cabinet with a protection type of at least IP54.
- Use the notch on the rear of the unit to attach it to a DIN rail.
- Ensure the unit is mounted securely on a vertical DIN rail (35 mm) by using a fixing element (e.g. retaining bracket or an end angle).

Push the unit upwards or downwards before lifting it from the DIN rail.

Expansion options	Please note the max. power consumption of the contact expansion modules (see Technical data PNOZ s7.1).
①: Base unit ②: Contact expansion module PNOZ s7.1 ③: Contact expansion module PNOZ s7.2 ④: Contact expansion module PNOZ s7.2 with terminator	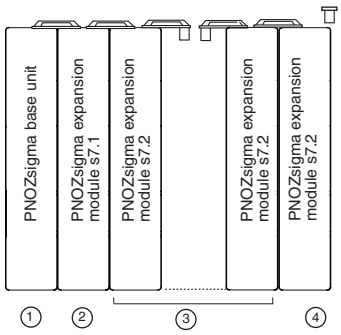
①: Base unit ②: Contact expansion module PNOZ s7.1 ③: Contact expansion module PNOZ s7.2 ④: Contact expansion module PNOZ s7, s8, s9, s10, s11 as terminator	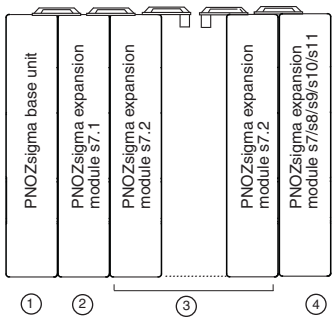

Pilz GmbH & Co. KG, Felix-Wankel-Straße 2, 73760 Ostfildern, Germany
Telephone: +49 711 3409-0, Telefax: +49 711 3409-133, E-Mail: pilz.gmbh@pilz.de

Up to PL e of EN ISO 13849-1
PNOZ s7.2

①: Contact expansion module PNOZ s7.1 with terminator ②: Contact expansion module PNOZ s7.2 ③: Contact expansion module PNOZ s7.2 with terminator	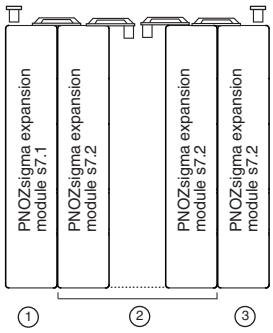
①: Contact expansion module PNOZ s7.1 with terminator ②: Contact expansion module PNOZ s7.2 ③: Contact expansion module PNOZ s7, s8, s9, s10, s11 as terminator	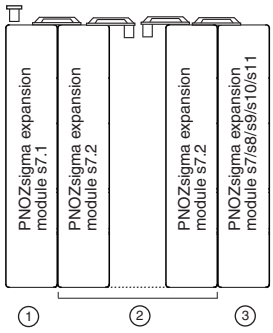
①: Base unit ②: Contact expansion module PNOZ s7.1 ③: Contact expansion module PNOZ s7.2 ④: Contact expansion module PNOZ s7.1 ⑤: Contact expansion module PNOZ s7.2 ⑥: Contact expansion module PNOZ s7.2 with terminator	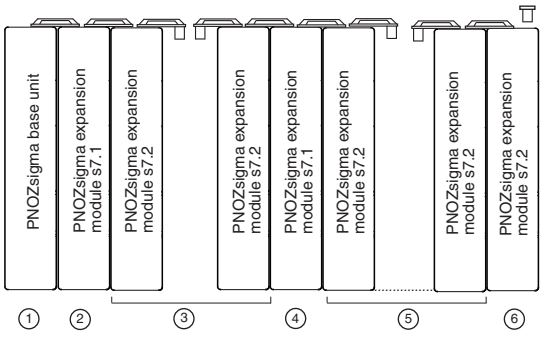

Up to PL e of EN ISO 13849-1
PNOZ s7.2

Dimensions

*with spring-loaded terminals

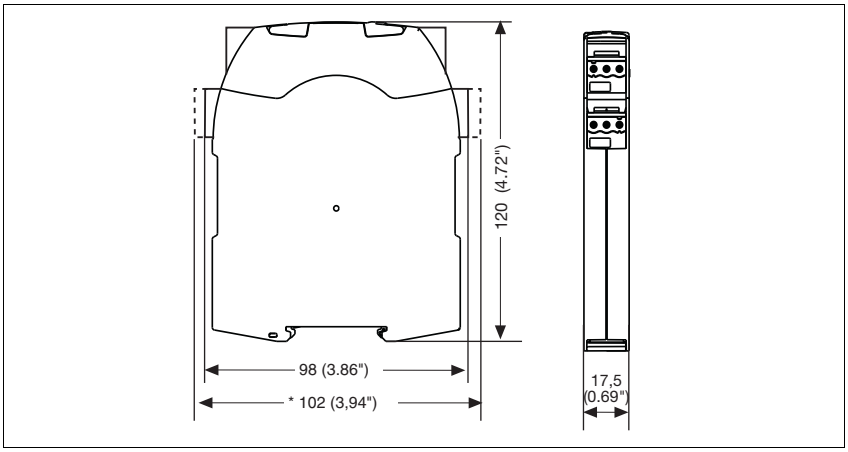

Pilz GmbH & Co. KG, Felix-Wankel-Straße 2, 73760 Ostfildern, Germany
Telephone: +49 711 3409-0, Telefax: +49 711 3409-133, E-Mail: pilz.gmbh@pilz.de

Up to PL e of EN ISO 13849-1
PNOZ s7.2

NOTICE

This data sheet is only intended for use during configuration. Please refer to the operating manual for installation and operation.

Service life graph

The service life graphs indicate the number of cycles from which failures due to wear must be expected. The wear is mainly caused by the electrical load; the mechanical load is negligible.

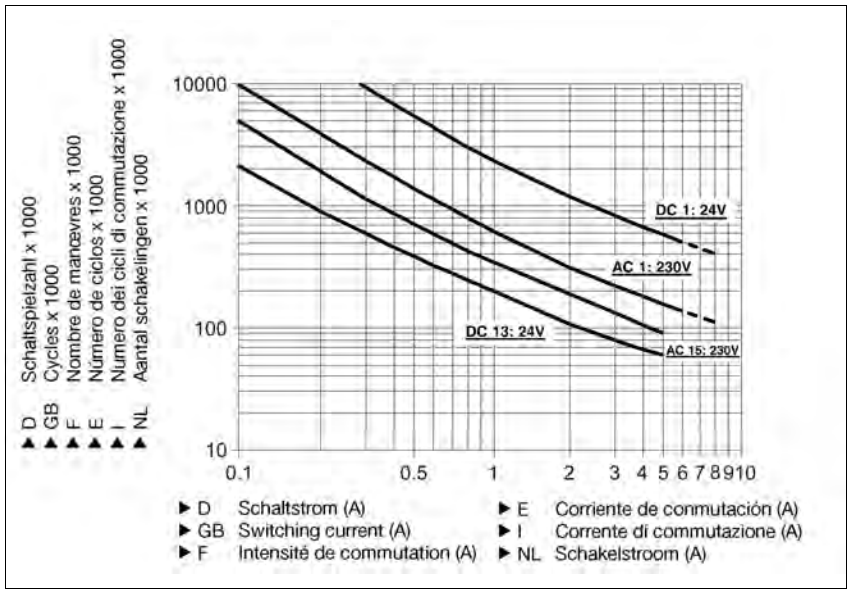

Example
- Inductive load: 0,2 A
- Utilisation category: AC15
- Contact service life: 2,000,000 cycles

Provided the application requires fewer than 2,000,000 cycles, the PFH value (see technical details) can be used in the calculation.

To increase the service life, sufficient spark suppression must be provided on all output contacts. With capacitive loads, any power surges that occur must be noted. With contactors, use freewheel diodes for spark suppression.

Up to PL e of EN ISO 13849-1
PNOZ s7.2

Technical details	
Electrical data	
Power consumption at U_B DC	**2.0 W**
Number of output contacts	
Safety contacts (S) instantaneous:	**4**
Auxiliary contacts (N/C):	**1**
Utilisation category in accordance with **EN 60947-4-1**	
Safety contacts: AC1 at **240 V**	I_{min}: **0.01 A** , I_{max}: **6.0 A** P_{max}: **1500 VA**
Safety contacts: DC1 at **24 V**	I_{min}: **0.01 A** , I_{max}: **6.0 A** P_{max}: **150 W**
Auxiliary contacts: AC1 at **240 V**	I_{min}: **0.01 A** , I_{max}: **2.0 A** P_{max}: **500 VA**
Auxiliary contacts: DC1 at **24 V**	I_{min}: **0.01 A** , I_{max}: **2.0 A** P_{max}: **50 W**
Utilisation category in accordance with **EN 60947-5-1**	
Safety contacts: AC15 at **230 V**	I_{max}: **5.0 A**
Safety contacts: DC13 at **24 V** (6 cycles/min)	I_{max}: **5.0 A**
Auxiliary contacts: AC15 at **230 V**	I_{max}: **2.0 A**
Auxiliary contacts: DC13 at **24 V** (6 cycles/min)	I_{max}: **2.0 A**
Contact material	**AgCuNi + 0.2 µm Au**
External contact fuse protection (I_K = 1 kA) to **EN 60947-5-1**	
Blow-out fuse, quick	
Safety contacts:	**10 A**
Auxiliary contacts:	**4 A**
Blow-out fuse, slow	
Safety contacts:	**6 A**
Auxiliary contacts:	**2 A**
Circuit breaker 24 VAC/DC, characteristic B/C	
Safety contacts:	**6 A**
Auxiliary contacts:	**2 A**
Max. overall cable resistance R_{lmax} input circuits, reset circuits	
single-channel at U_B DC	**30 Ohm**
Safety-related characteristic data	
PL in accordance with **EN ISO 13849-1: 2006**	**PL e** (**Cat. 4**)
Category in accordance with **EN 954-1**	**Cat. 4**
SIL CL in accordance with **EN IEC 62061**	**SIL CL 3**
PFH in accordance with **EN IEC 62061**	**2.31E-09**
SIL in accordance with **IEC 61511**	**SIL 3**
PFD in accordance with **IEC 61511**	**2.03E-06**
T_M [year] in accordance with **EN ISO 13849-1: 2006**	**20**
Times	
Switch-on delay	
with automatic reset after power on typ.	**30 ms**
with automatic reset after power on max.	**50 ms**
Delay-on de-energisation	
with E-STOP typ.	**18 ms**
with E-STOP max.	**30 ms**
with power failure typ.	**18 ms**
with power failure max.	**30 ms**
Environmental data	
EMC	**EN 60947-5-1**, **EN 61000-6-2**, **EN 61000-6-4**
Vibration to **EN 60068-2-6**	
Frequency	**10 - 55 Hz**
Amplitude	**0.35 mm**
Climatic suitability	**EN 60068-2-78**

Pilz GmbH & Co. KG, Felix-Wankel-Straße 2, 73760 Ostfildern, Germany
Telephone: +49 711 3409-0, Telefax: +49 711 3409-133, E-Mail: pilz.gmbh@pilz.de

Up to PL e of EN ISO 13849-1
PNOZ s7.2

Environmental data	
Airgap creepage in accordance with **EN 60947-1**	
Pollution degree	**2**
Overvoltage category	**III**
Rated insulation voltage	**250 V**
Rated impulse withstand voltage	**6.00 kV**
Ambient temperature	**-10 - 55 °C**
Storage temperature	**-40 - 85 °C**
Protection type	
Mounting (e.g. cabinet)	**IP54**
Housing	**IP40**
Terminals	**IP20**
Mechanical data	
Housing material	
Housing	**PC**
Front	**PC**
Cross section of external conductors with screw terminals	
1 core flexible	**0.25 - 2.50 mm² , 24 - 12 AWG** No. 750177
2 core, same cross section, flexible:	
with crimp connectors, without insulating sleeve	**0.25 - 1.00 mm² , 24 - 16 AWG** No. 750177
without crimp connectors or with TWIN crimp connectors	**0.20 - 1.50 mm² , 24 - 16 AWG** No. 750177
Torque setting with screw terminals	**0.50 Nm** No. 750177
Cross section of external conductors with spring-loaded terminals: Flexible with/without crimp connectors	**0.20 - 2.50 mm² , 24 - 12 AWG** No. 751177
Spring-loaded terminals: Terminal points per connection	**2** No. 751177
Stripping length	**9 mm** No. 751177
Dimensions	
Height	**102.0 mm** No. 751177 **98.0 mm** No. 750177
Width	**17.5 mm**
Depth	**120.0 mm**
Weight	**170 g**

No. stands for order number.

It is essential to consider the relay's service life graphs. The relay outputs' safety-related characteristic data is only valid if the values in the service life graphs are met.

The PFH value depends on the switching frequency and the load on the relay output.
If the service life graphs are not accessible, the stated PFH value can be used irrespective of the switching frequency and the load, as the PFH value already considers the relay's B10d value as well as the failure rates of the other components.

All the units used within a safety function must be considered when calculating the safety characteristic data.

INFORMATION
A safety function's SIL/PL values are **not** identical to the SIL/PL values of the units that are used and may be different. We recommend that you use the PAScal software tool to calculate the safety function's SIL/PL values.

The standards current on **2007-07** apply.

Up to PL e of EN ISO 13849-1
PNOZ s7.2

Conventional thermal current while loading several contacts

Number of contacts	I_{th} per contact at U_B DC
1	**6.00 A**
2	**5.50 A**
3	**4.50 A**
4	**4.00 A**

Order reference

Type	Features		Terminals	Order no.
PNOZ s7.2 C		24 VDC	With spring-loaded terminals	751 177
PNOZ s7.2		24 VDC	With screw terminals	750 177

Pilz GmbH & Co. KG, Felix-Wankel-Straße 2, 73760 Ostfildern, Germany
Telephone: +49 711 3409-0, Telefax: +49 711 3409-133, E-Mail: pilz.gmbh@pilz.de

Up to PL c of EN ISO 13849-1
PNOZ s8



Contact expansion module for increasing the number of available contacts

Approvals

	PNOZ s8
cULus LISTED	◆
TÜV	◆
CCC	◆

Unit features

- Relay outputs:
  - 2 safety contacts (N/O), instantaneous
- 1 semiconductor output
- LED indicator for:
  - Input status, channel 1
  - Input status, channel 2
  - Switch status of the safety contacts
  - Error
- Plug-in connection terminals (either spring-loaded terminal or screw terminal)

Unit description

The unit meets the requirements of EN 60947-5-1, EN 60204-1 and VDE 0113-1. The contact expansion module is used to increase the number of instantaneous safety contacts available on a base unit. Base units are all safety relays with feedback loop monitoring.
The category that can be achieved in accordance with EN 954-1 and EN ISO 13849-1 depends on the category of the base unit. The contact expansion module may not exceed this.

Safety features

The unit meets the following safety requirements:

- The unit monitors its own output contacts.
- The safety function remains effective in the case of a component failure.
- Earth fault in the feedback loop: Detected, depending on the base unit that is used.
- Earth fault in the input circuit: The output relays de-energise and the safety contacts open.

2.3

Block diagram

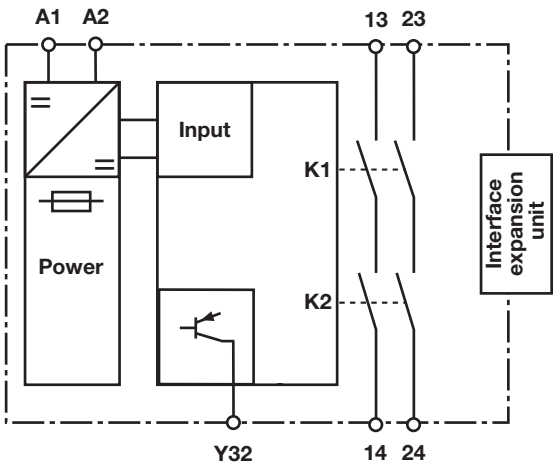

Up to PL c of EN ISO 13849-1
PNOZ s8

Function description

with PNOZsigma base unit:
- Dual-channel operation via PNOZsigma connector

without PNOZsigma base unit:
- Single-channel operation: one input circuit affects the output relays

Timing diagram

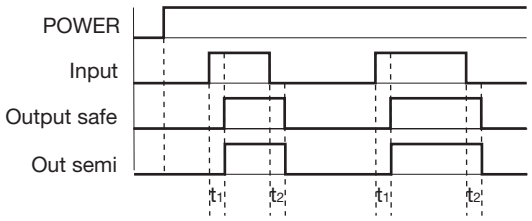

Key
- Power: Supply voltage
- Input: Input circuits A1
- Output safe: Safety contacts 13-14, 23-24
- Out semi: Semiconductor output Y32
- t_1: Switch-on delay
- t_2: Delay-on de-energisation

Wiring

Please note:
- Information given in the “Technical details” must be followed.
- Outputs 13-14, 23-24 are safety contacts.
- To prevent contact welding, a fuse should be connected before the output contacts (see technical details).
- Calculation of the max. cable runs I_{max} in the input circuit:

$$I_{max} = \frac{R_{lmax}}{R_l / km}$$

R_{lmax} = max. overall cable resistance (see technical details)
R_l /km = cable resistance/km
- Use copper wire that can withstand 60/75 °C.
- Sufficient fuse protection must be provided on all output contacts with capacitive and inductive loads.

Pilz GmbH & Co. KG, Felix-Wankel-Straße 2, 73760 Ostfildern, Germany
Telephone: +49 711 3409-0, Telefax: +49 711 3409-133, E-Mail: pilz.gmbh@pilz.de

Up to PL c of EN ISO 13849-1
PNOZ s8

Preparing for operation

- Supply voltage

Supply voltage	AC	DC
		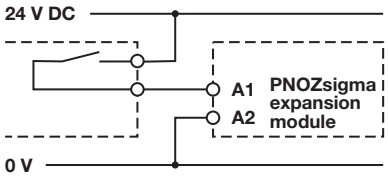

- Input circuit

Input circuit	Single-channel	Dual-channel
Base unit: PNOZ X safety relay	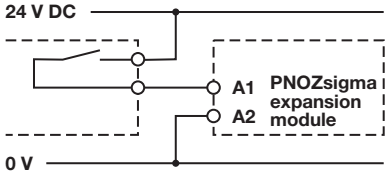	
Base unit: PNOZelog safety relay Driven via semiconductor outputs (24 VDC)	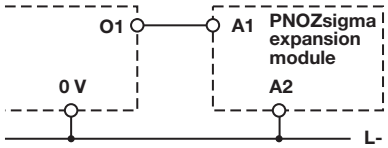	

- Feedback loop

with PNOZsigma base unit:
The feedback loop is connected and evaluated via the connector.

without PNOZsigma base unit:
Feedback loop does not need to be monitored because the contact expansion block monitors its own output contacts.

- Semiconductor output

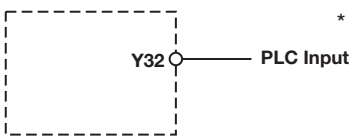

*Connect together the 0V connections on all the external power supplies

INFORMATION
If a base unit and a contact expander module from the PNOZsigma range are connected via the connector, no additional wiring is necessary.
Do not connect A1 to the contact expander module!

Pilz GmbH & Co. KG, Felix-Wankel-Straße 2, 73760 Ostfildern, Germany
Telephone: +49 711 3409-0, Telefax: +49 711 3409-133, E-Mail: pilz.gmbh@pilz.de

Up to PL c of EN ISO 13849-1
PNOZ s8

Terminal configuration

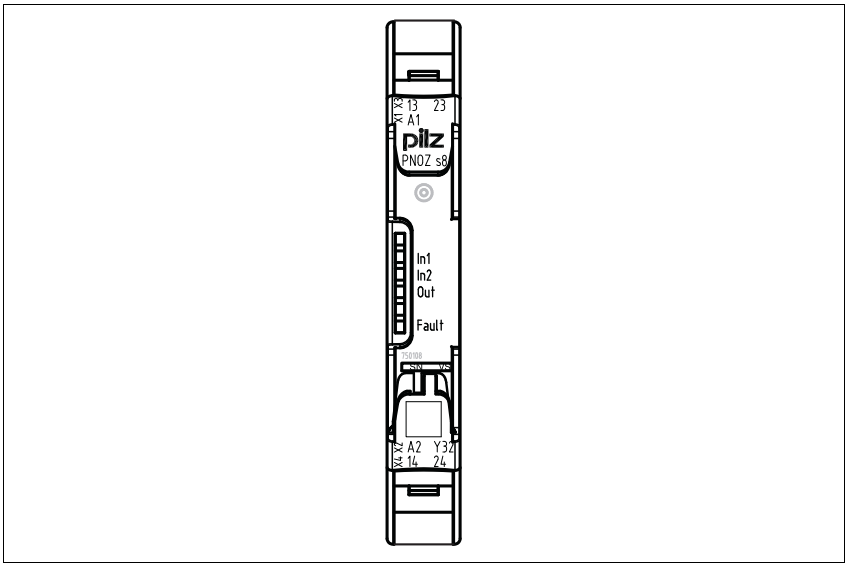

Installation

Install contact expander module without base unit:

- Ensure that the plug terminator is inserted at the side of the unit.

Connect base unit and PNOZsigma contact expander module:

- Remove the plug terminator at the side of the base unit and at the contact expander module
- Connect the base unit and the contact expander module to the supplied connector before mounting the units to the DIN rail.

Installation in control cabinet

- The safety relay should be installed in a control cabinet with a protection type of at least IP54.
- Use the notch on the rear of the unit to attach it to a DIN rail (35 mm).
- When installed vertically: Secure the unit by using a fixing element (e.g. retaining brakket or end angle).
- Push the unit upwards or downwards before lifting it from the DIN rail.

Dimensions

*with spring-loaded terminals

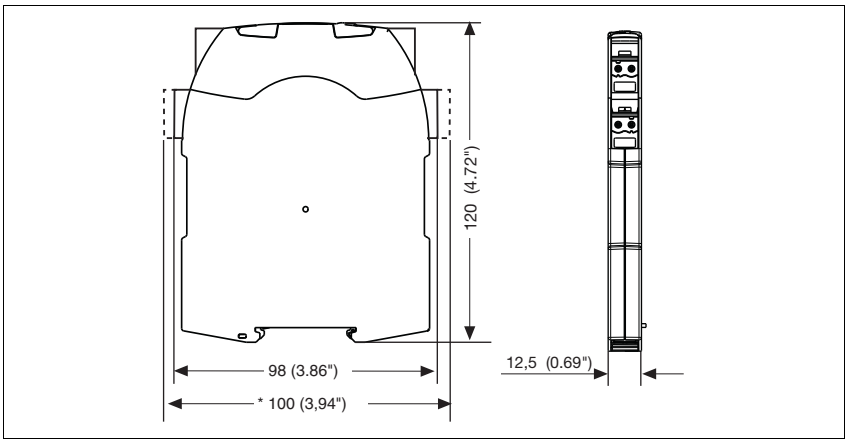

Pilz GmbH & Co. KG, Felix-Wankel-Straße 2, 73760 Ostfildern, Germany
Telephone: +49 711 3409-0, Telefax: +49 711 3409-133, E-Mail: pilz.gmbh@pilz.de

Up to PL c of EN ISO 13849-1
PNOZ s8

NOTICE

This data sheet is only intended for use during configuration. Please refer to the operating manual for installation and operation.

Technical details	
Electrical data	
Supply voltage	
Supply voltage U_B DC	**24 V**
Voltage tolerance	**-20 %/+20 %**
Power consumption at U_B DC	**2.0 W**
Residual ripple DC	**20 %**
Voltage and current at	
Input circuit DC: **24.0 V**	**65.0 mA**
Number of output contacts	
Safety contacts (S) instantaneous:	**2**
Utilisation category in accordance with **EN 60947-4-1**	
Safety contacts: AC1 at **240 V**	I_{min}: **0.02 A** , I_{max}: **3.0 A** P_{max}: **720 VA**
Safety contacts: DC1 at **24 V**	I_{min}: **0.02 A** , I_{max}: **3.0 A** P_{max}: **72 W**
Utilisation category in accordance with **EN 60947-5-1**	
Safety contacts: AC15 at **230 V**	I_{max}: **1.5 A**
Safety contacts: DC13 at **24 V** (6 cycles/min)	I_{max}: **1.5 A**
Contact material	**AgSnO2**
External contact fuse protection (I_K = 1 kA) to **EN 60947-5-1**	
Blow-out fuse, quick	
Safety contacts:	**4 A**
Blow-out fuse, slow	
Safety contacts:	**2 A**
Circuit breaker 24 VAC/DC, characteristic B/C	
Safety contacts:	**2 A**
Semiconductor outputs (short circuit proof)	**24.0 V** DC, **20 mA**
Max. overall cable resistance R_{lmax} input circuits, reset circuits	
single-channel at U_B DC	**30 Ohm**
Safety-related characteristic data	
PL in accordance with **EN ISO 13849-1: 2006**	**PL c** (**Cat. 3**)
Category in accordance with **EN 954-1**	**Cat. 3**
SIL CL in accordance with **EN IEC 62061**	**SIL CL 2**
PFH in accordance with **EN IEC 62061**	**2.00E-07**
SIL in accordance with **IEC 61511**	**SIL 2**
PFD in accordance with **IEC 61511**	**6.35E-03**
T_M [year] in accordance with **EN ISO 13849-1: 2006**	**20**
Times	
Switch-on delay	
with automatic reset after power on typ.	**100 ms**
with automatic reset after power on max.	**150 ms**
Delay-on de-energisation	
with E-STOP typ.	**30 ms**
with E-STOP max.	**40 ms**
with power failure typ.	**30 ms**
with power failure max.	**40 ms**

Up to PL c of EN ISO 13849-1
PNOZ s8

Environmental data	
EMC	**EN 60947-5-1**, **EN 61000-6-2**, **EN 61000-6-4**
Vibration to **EN 60068-2-6**	
Frequency	**10 - 55 Hz**
Amplitude	**0.35 mm**
Climatic suitability	**EN 60068-2-78**
Airgap creepage in accordance with **EN 60947-1**	
Pollution degree	**2**
Overvoltage category	**III**
Rated insulation voltage	**250 V**
Rated impulse withstand voltage	**4.00 kV**
Ambient temperature	**-10 - 55 °C**
Storage temperature	**-40 - 85 °C**
Protection type	
Mounting (e.g. cabinet)	**IP54**
Housing	**IP40**
Terminals	**IP20**
Mechanical data	
Housing material	
Housing	**PC**
Front	**PC**
Cross section of external conductors with screw terminals	
1 core flexible	**0.25 - 2.50 mm² , 24 - 12 AWG** No. 750108
2 core, same cross section, flexible:	
with crimp connectors, without insulating sleeve	**0.25 - 1.00 mm² , 24 - 16 AWG** No. 750108
without crimp connectors or with TWIN crimp connectors	**0.20 - 1.50 mm² , 24 - 16 AWG** No. 750108
Torque setting with screw terminals	**0.50 Nm** No. 750108
Cross section of external conductors with spring-loaded terminals: Flexible with/without crimp connectors	**0.20 - 2.50 mm² , 24 - 12 AWG** No. 751108
Spring-loaded terminals: Terminal points per connection	**2** No. 751108
Stripping length	**9 mm** No. 751108
Dimensions	
Height	**102.0 mm** No. 751108 **98.0 mm** No. 750108
Width	**12.5 mm**
Depth	**120.0 mm**
Weight	**105 g**

No. stands for order number.

All the units used within a safety function must be considered when calculating the safety characteristic data.

INFORMATION
A safety function's SIL/PL values are **not** identical to the SIL/PL values of the units that are used and may be different. We recommend that you use the PAScal software tool to calculate the safety function's SIL/PL values.

The standards current on **2006-04** apply.

Pilz GmbH & Co. KG, Felix-Wankel-Straße 2, 73760 Ostfildern, Germany
Telephone: +49 711 3409-0, Telefax: +49 711 3409-133, E-Mail: pilz.gmbh@pilz.de

Up to PL c of EN ISO 13849-1
PNOZ s8

Conventional thermal current while loading several contacts

Number of contacts	I_{th} per contact at U_B DC
1	**3.00 A**
2	**3.00 A**

Order reference

Type	Features		Terminals	Order no.
PNOZ s8		24 VDC	With screw terminal	750 108
PNOZ s8 C		24 VDC	With spring-loaded terminal	751 108

Up to PL e of EN ISO 13849-1
PNOZ s10



Contact expansion module for increasing the number of available contacts

Approvals

	PNOZ s10
c UL us LISTED	◆
TÜV SÜD	◆
CCC	◆

Unit features

- Positive-guided relay outputs:
  - 4 safety contacts (N/O), instantaneous
  - 1 auxiliary contact (N/C), instantaneous
- Safe separation of safety contacts from all other circuits
- LED indicator for:
  - Input status, channel 1
  - Input status, channel 2
  - Switch status, safety contacts
  - Error
- Plug-in connection terminals (either spring-loaded terminal or screw terminal)

Unit description

The unit meets the requirements of EN 60947-5-1, EN 60204-1 and VDE 0113-1. The contact expansion module is used to increase the number of instantaneous safety contacts available on a base unit. Base units are all safety relays with feedback loop monitoring.
The category that can be achieved in accordance with EN 954-1 and EN ISO 13849-1 depends on the category of the base unit. The contact expansion module may not exceed this.

Safety features

The unit meets the following safety requirements:

- The contact expansion module expands an existing circuit. As the output relays are monitored via the base unit's feedback loop, the safety functions on the existing circuit are transferred to the contact expansion module.
- The safety function remains effective in the case of a component failure.
- Earth fault in the feedback loop: Detected, depending on the base unit that is used.
- Earth fault in the input circuit: The output relays de-energise and the safety contacts open.

Block diagram

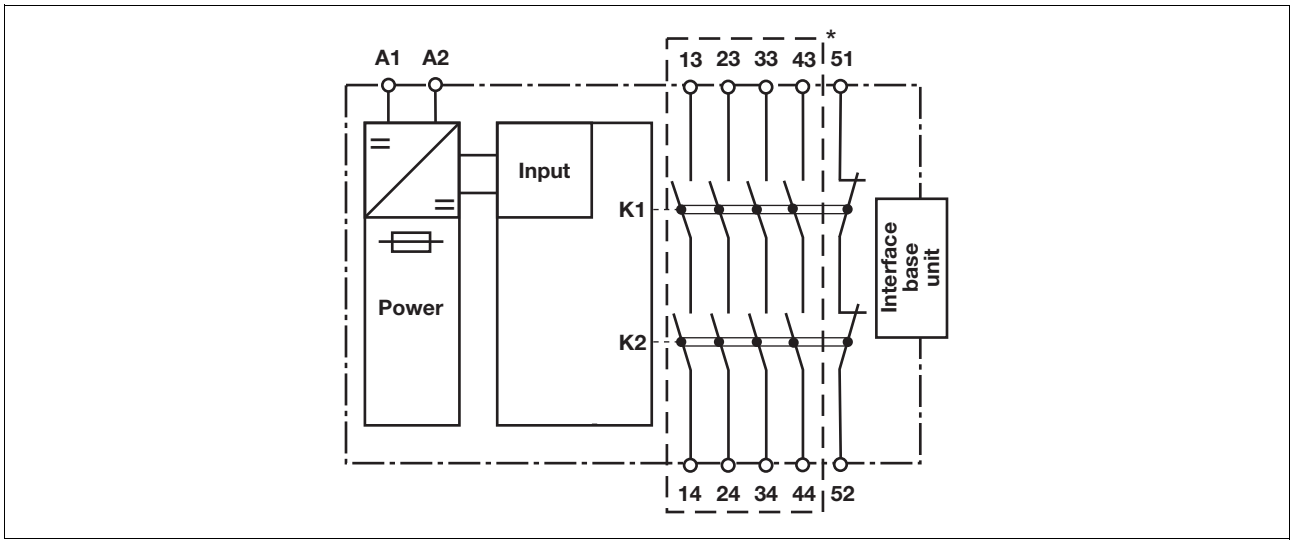

* Safe separation in accordance with EN 60947-1, 6 kV

Pilz GmbH & Co. KG, Felix-Wankel-Straße 2, 73760 Ostfildern, Germany
Telephone: +49 711 3409-0, Telefax: +49 711 3409-133, E-Mail: pilz.gmbh@pilz.de
1001966-EN-03-2011-11

Up to PL e of EN ISO 13849-1
PNOZ s10

Function description

with PNOZsigma base unit:
- Dual-channel operation via PNOZsigma connector

without PNOZsigma base unit:
- Single-channel operation: one input circuit affects the output relays

Timing diagram

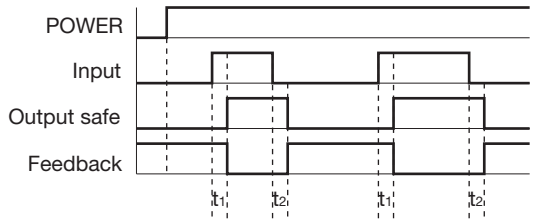

Key
- Power: Supply voltage
- Input: Input circuits A1
- Output safe: Safety contacts 13-14, 23-24, 33-34, 43-44
- Feedback: Feedback loop 51-52
- t_1: Switch-on delay
- t_2: Delay-on de-energisation

Wiring

Please note:
- Information given in the “Technical details” must be followed.
- Outputs 13-14, 23-24, 33-34, 43-44 are safety contacts, output 51-52 is an auxiliary contact (e.g. for display).
- To prevent contact welding, a fuse should be connected before the output contacts (see technical details).
- Calculation of the max. cable runs l_{max} in the input circuit:

$$l_{max} = \frac{R_{lmax}}{R_l / km}$$

R_{lmax} = max. overall cable resistance (see technical details)
R_l /km = cable resistance/km
- Use copper wire that can withstand 60/75 °C.
- Sufficient fuse protection must be provided on all output contacts with capacitive and inductive loads.

Up to PL e of EN ISO 13849-1
PNOZ s10

Preparing for operation

- Supply voltage

Supply voltage	AC	DC
		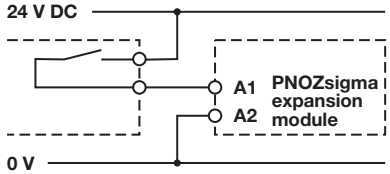

- Input circuit

Input circuit	Single-channel	Dual-channel
Base unit: Safety relay PNOZ X	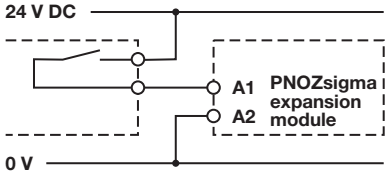	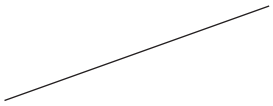
Base unit: Safety relay PNOZelog Driven via semiconductor outputs (24 VDC)	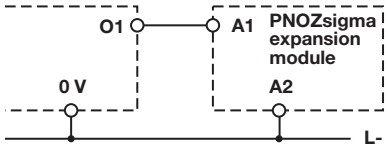	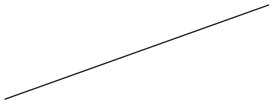

- Feedback circuit

Feedback circuit	Base unit: Safety relay PNOZ X	Base unit: Safety relay PNOZelog
The inputs that evaluate the feedback loop will depend on the base unit and application	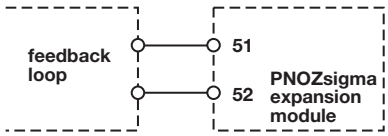	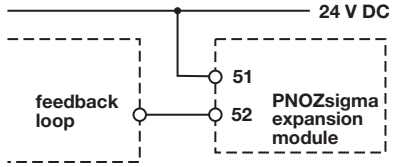

- Connection to PNOZsigma base unit

	Base unit: Safety relay PNOZsigma
The feedback loop is connected and evaluated via the connector	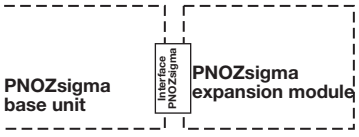

INFORMATION
If a base unit and a contact expander module from the PNOZsigma range are connected via the connector, no additional wiring is necessary.

Do not connect A1 to the contact expander module!

Pilz GmbH & Co. KG, Felix-Wankel-Straße 2, 73760 Ostfildern, Germany
Telephone: +49 711 3409-0, Telefax: +49 711 3409-133, E-Mail: pilz.gmbh@pilz.de

Up to PL e of EN ISO 13849-1
PNOZ s10

Terminal configuration

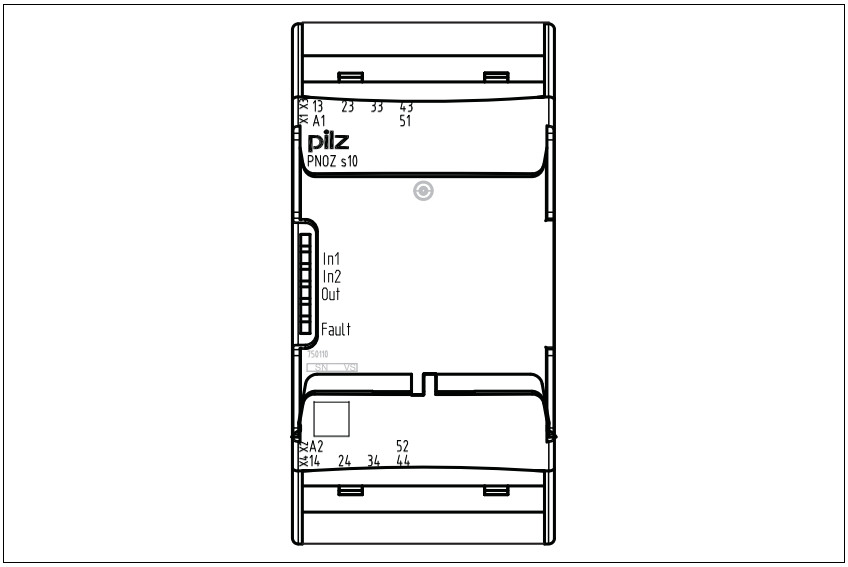

Installation

Install contact expander module without base unit:

- Ensure that the plug terminator is inserted at the side of the unit.

Connect base unit and PNOZsigma contact expander module:

- Remove the plug terminator at the side of the base unit and at the contact expander module
- Connect the base unit and the contact expander module to the supplied connector before mounting the units to the DIN rail.

Installation in control cabinet

- The safety relay should be installed in a control cabinet with a protection type of at least IP54.
- Use the notch on the rear of the unit to attach it to a DIN rail (35 mm).
- When installed vertically: Secure the unit by using a fixing element (e.g. retaining brakket or end angle).
- Push the unit upwards or downwards before lifting it from the DIN rail.

Dimensions

*with spring-loaded terminals

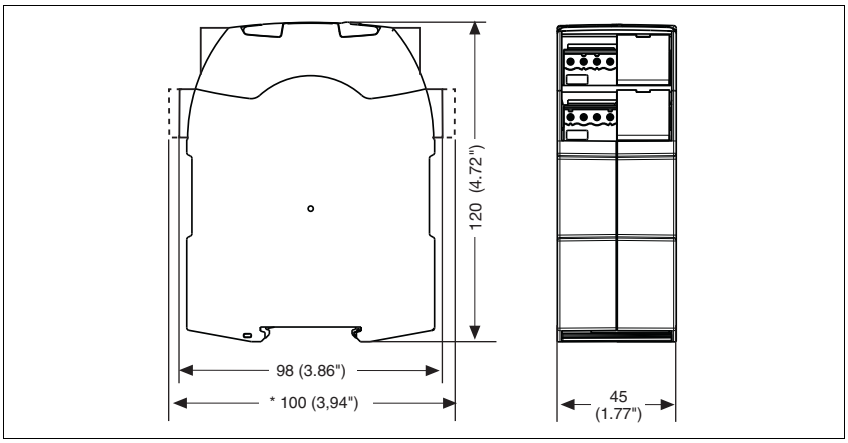

Up to PL e of EN ISO 13849-1
PNOZ s10

Notice

This data sheet is only intended for use during configuration. Please refer to the operating manual for installation and operation.

Service life graph

The service life graphs indicate the number of cycles from which failures due to wear must be expected. The wear is mainly caused by the electrical load; the mechanical load is negligible.

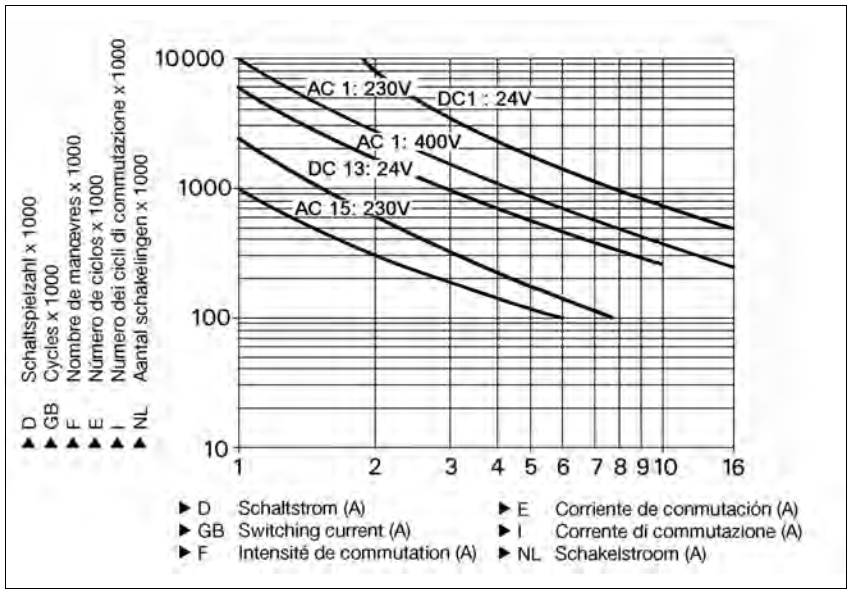

Example
- Inductive load: 2 A
- Utilisation category: AC15
- Contact service life: 300 000 cycles

Provided the application requires fewer than 300 000 cycles, the PFH value (see technical details) can be used in the calculation.

To increase the service life, sufficient spark suppression must be provided on all output contacts. With capacitive loads, any power surges that occur must be noted. With contactors, use freewheel diodes for spark suppression.

Technical details

Electrical data	
Supply voltage	
Supply voltage U_B DC	**24 V**
Voltage tolerance	**-20 %/+20 %**
Power consumption at U_B DC	**3.0 W**
Residual ripple DC	**20 %**
Voltage and current at	
Input circuit DC: **24.0 V**	**95.0 mA**
Number of output contacts	
Safety contacts (S) instantaneous:	**4**
Auxiliary contacts (N/C):	**1**

Pilz GmbH & Co. KG, Felix-Wankel-Straße 2, 73760 Ostfildern, Germany
Telephone: +49 711 3409-0, Telefax: +49 711 3409-133, E-Mail: pilz.gmbh@pilz.de

Up to PL e of EN ISO 13849-1
PNOZ s10

Electrical data	
Utilisation category in accordance with **EN 60947-4-1**	
Safety contacts: AC1 at **240 V**	I_{min}: **0.01 A** , I_{max}: **12.0 A** P_{max}: **3000 VA**
Safety contacts: DC1 at **24 V**	I_{min}: **0.01 A** , I_{max}: **12.0 A** P_{max}: **300 W**
Auxiliary contacts: AC1 at **240 V**	I_{min}: **0.01 A** , I_{max}: **2.0 A** P_{max}: **500 VA**
Auxiliary contacts: DC1 at **24 V**	I_{min}: **0.01 A** , I_{max}: **2.0 A** P_{max}: **50 W**
Utilisation category in accordance with **EN 60947-5-1**	
Safety contacts: AC15 at **230 V**	I_{max}: **6.0 A**
Safety contacts: DC13 at **24 V** (6 cycles/min)	I_{max}: **7.5 A**
Auxiliary contacts: AC15 at **230 V**	I_{max}: **2.0 A**
Auxiliary contacts: DC13 at **24 V** (6 cycles/min)	I_{max}: **2.0 A**
Contact material	**AgSnO2 + 0.2 µm Au**
External contact fuse protection (I_K = 1 kA) to **EN 60947-5-1**	
Blow-out fuse, quick	
Safety contacts:	**16 A**
Auxiliary contacts:	**4 A**
Blow-out fuse, slow	
Safety contacts:	**10 A**
Auxiliary contacts:	**2 A**
Circuit breaker 24 VAC/DC, characteristic B/C	
Safety contacts:	**10 A**
Auxiliary contacts:	**2 A**
Max. overall cable resistance R_{lmax} input circuits, reset circuits	
single-channel at U_B DC	**30 Ohm**
Safety-related characteristic data	
PL in accordance with **EN ISO 13849-1: 2006**	**PL e** (**Cat. 4**)
Category in accordance with **EN 954-1**	**Cat. 4**
SIL CL in accordance with **EN IEC 62061**	**SIL CL 3**
PFH in accordance with **EN IEC 62061**	**2.31E-09**
SIL in accordance with **IEC 61511**	**SIL 3**
PFD in accordance with **IEC 61511**	**2.03E-06**
T_M [year] in accordance with **EN ISO 13849-1: 2006**	**20**
Times	
Switch-on delay	
with automatic reset after power on typ.	**30 ms**
with automatic reset after power on max.	**50 ms**
Delay-on de-energisation	
with E-STOP typ.	**20 ms**
with E-STOP max.	**30 ms**
with power failure typ.	**20 ms**
with power failure max.	**30 ms**
Environmental data	
EMC	**EN 60947-5-1**, **EN 61000-6-2**, **EN 61000-6-4**
Vibration to **EN 60068-2-6**	
Frequency	**10 - 55 Hz**
Amplitude	**0.35 mm**
Climatic suitability	**EN 60068-2-78**
Airgap creepage in accordance with **EN 60947-1**	
Pollution degree	**2**
Overvoltage category	**III**
Rated insulation voltage	**250 V**
Rated impulse withstand voltage	**6.00 kV**
Ambient temperature	**-10 - 55 °C**

Up to PL e of EN ISO 13849-1
PNOZ s10

Environmental data	
Storage temperature	**-40 - 85 °C**
Protection type	
Mounting (e.g. cabinet)	**IP54**
Housing	**IP40**
Terminals	**IP20**
Mechanical data	
Housing material	
Housing	**PC**
Front	**PC**
Cross section of external conductors with screw terminals	
1 core flexible	**0.25 - 2.50 mm² , 24 - 12 AWG** No. 750110
2 core, same cross section, flexible:	
with crimp connectors, without insulating sleeve	**0.25 - 1.00 mm² , 24 - 16 AWG** No. 750110
without crimp connectors or with TWIN crimp connectors	**0.20 - 1.50 mm² , 24 - 16 AWG** No. 750110
Torque setting with screw terminals	**0.50 Nm** No. 750110
Cross section of external conductors with spring-loaded terminals: Flexible with/without crimp connectors	**0.20 - 2.50 mm² , 24 - 12 AWG** No. 751110
Spring-loaded terminals: Terminal points per connection	**2** No. 751110
Stripping length	**9 mm** No. 751110
Dimensions	
Height	**98.0 mm**
Width	**45.0 mm**
Depth	**120.0 mm**
Weight	**300 g**

No. stands for order number.

It is essential to consider the relay's service life graphs. The relay outputs' safety-related characteristic data is only valid if the values in the service life graphs are met.

The PFH value depends on the switching frequency and the load on the relay output.
If the service life graphs are not accessible, the stated PFH value can be used irrespective of the switching frequency and the load, as the PFH value already considers the relay's B10d value as well as the failure rates of the other components.

All the units used within a safety function must be considered when calculating the safety characteristic data.

INFORMATION
A safety function's SIL/PL values are **not** identical to the SIL/PL values of the units that are used and may be different. We recommend that you use the PAScal software tool to calculate the safety function's SIL/PL values.

The standards current on **2006-04** apply.

Pilz GmbH & Co. KG, Felix-Wankel-Straße 2, 73760 Ostfildern, Germany
Telephone: +49 711 3409-0, Telefax: +49 711 3409-133, E-Mail: pilz.gmbh@pilz.de

Up to PL e of EN ISO 13849-1
PNOZ s10

Conventional thermal current while loading several contacts

Number of contacts	I_{th} per contact at U_B DC
1	**12.00 A**
2	**11.00 A**
3	**9.00 A**
4	**8.00 A**

Order reference

Type	Features		Terminals	Order no.
PNOZ s10		24 VDC	With screw terminal	750 110
PNOZ s10 C		24 VDC	With spring-loaded terminal	751 110

Up to PL e of EN ISO 13849-1
PNOZ s11

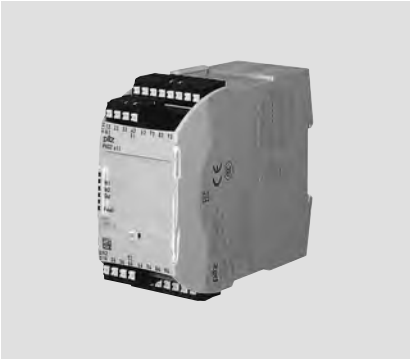

Contact expansion module for increasing the number of available contacts

Approvals

	PNOZ s11
cULus LISTED	◆
TÜV SÜD	◆
CCC	◆

Unit features

- Positive-guided relay outputs:
  - 8 safety contacts (N/O), instantaneous
  - 1 auxiliary contact (N/C), instantaneous
- Safe separation of safety contacts from all other circuits
- LED indicator for:
  - Input status, channel 1
  - Input status, channel 2
  - Switch status, safety contacts
  - Error
- Plug-in connection terminals (either spring-loaded terminal or screw terminal)

Unit description

The unit meets the requirements of EN 60947-5-1, EN 60204-1 and VDE 0113-1. The contact expansion module is used to increase the number of instantaneous safety contacts available on a base unit. Base units are all safety relays with feedback loop monitoring.
The category that can be achieved in accordance with EN 954-1 and EN ISO 13849-1 depends on the category of the base unit. The contact expansion module may not exceed this.

Safety features

The unit meets the following safety requirements:

- The contact expansion module expands an existing circuit. As the output relays are monitored via the base unit's feedback loop, the safety functions on the existing circuit are transferred to the contact expansion module.
- The safety function remains effective in the case of a component failure.
- Earth fault in the feedback loop: Detected, depending on the base unit that is used.
- Earth fault in the input circuit: The output relays de-energise and the safety contacts open.

Block diagram

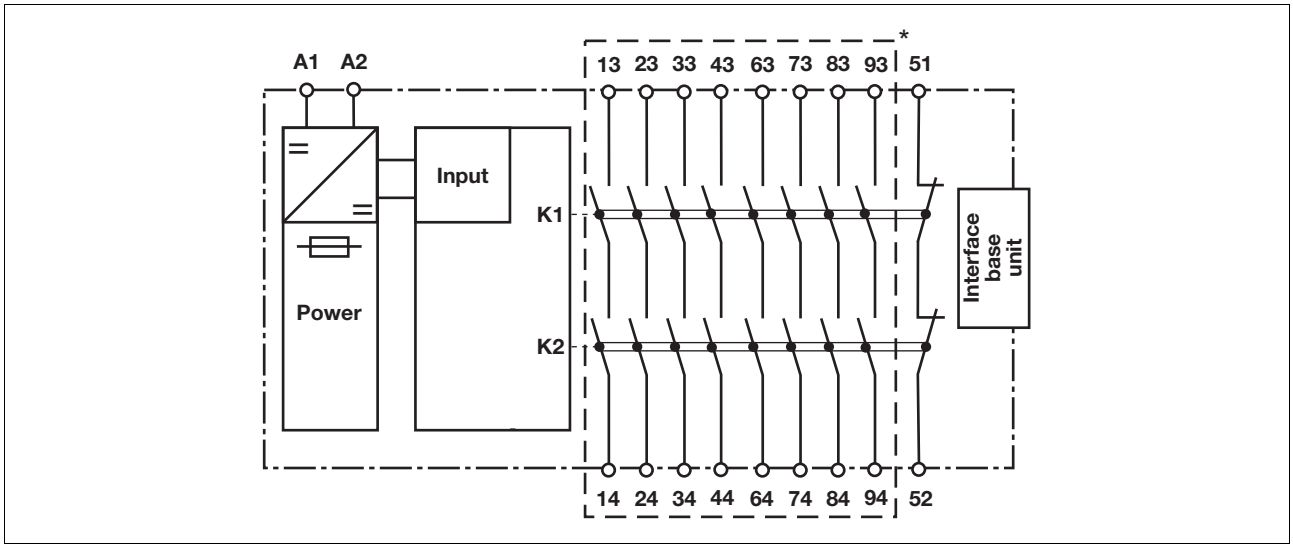

*Safe separation in accordance with EN 60947-1, 6 kV

Pilz GmbH & Co. KG, Felix-Wankel-Straße 2, 73760 Ostfildern, Germany
Telephone: +49 711 3409-0, Telefax: +49 711 3409-133, E-Mail: pilz.gmbh@pilz.de
1001967-EN-04-2011-09

Up to PL e of EN ISO 13849-1
PNOZ s11

Function description

with PNOZsigma base unit:
- Dual-channel operation via PNOZsigma connector

without PNOZsigma base unit:
- Single-channel operation: one input circuit affects the output relays

Timing diagram

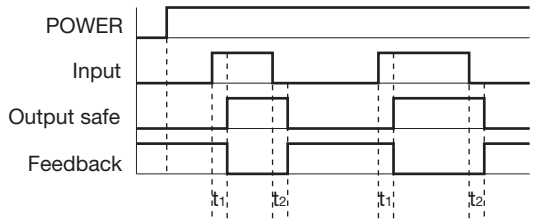

Key
- Power: Supply voltage
- Input: Input circuits A1
- Output safe: Safety contacts 13-14, 23-24, 33-34, 43-44, 63-64, 73-74, 83-84, 93-94
- Feedback: Feedback loop 51-52
- t_1: Switch-on delay
- t_2: Delay-on de-energisation

Wiring

Please note:
- Information given in the “Technical details” must be followed.
- Outputs 13-14, 23-24, 33-34, 43-44, 63-64, 73-74, 83-84, 93-94 are safety contacts, output 51-52 is an auxiliary contact (e.g. for display).
- To prevent contact welding, a fuse should be connected before the output contacts (see technical details).
- Calculation of the max. cable runs l_{max} in the input circuit:

$$l_{max} = \frac{R_{lmax}}{R_l / km}$$

R_{lmax} = max. overall cable resistance (see technical details)
R_l /km = cable resistance/km
- Use copper wire that can withstand 60/75 °C.
- Sufficient fuse protection must be provided on all output contacts with capacitive and inductive loads.

Up to PL e of EN ISO 13849-1
PNOZ s11

Preparing for operation

- Supply voltage

Supply voltage	AC	DC
		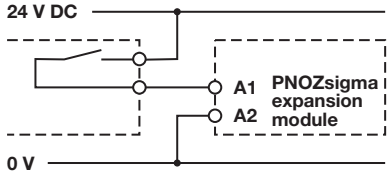

- Input circuit

Input circuit	Single-channel	Dual-channel
Base unit: Safety relay PNOZ X	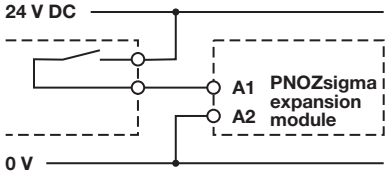	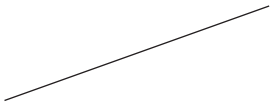
Base unit: Safety relay PNOZelog Driven via semiconductor outputs (24 VDC)	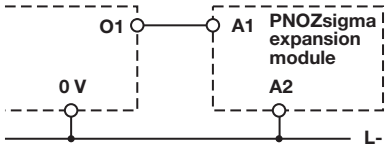	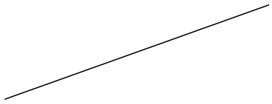

- Feedback circuit

Feedback circuit	Base unit: Safety relay PNOZ X	Base unit: Safety relay PNOZelog
The inputs that evaluate the feedback loop will depend on the base unit and application	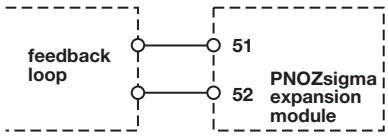	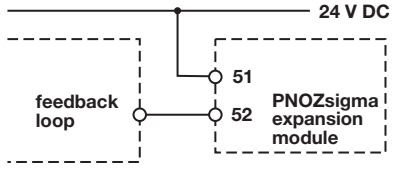

- Connection to PNOZsigma base unit

	Base unit: Safety relay PNOZsigma
The feedback loop is connected and evaluated via the connector	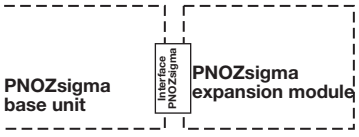

INFORMATION
If a base unit and a contact expander module from the PNOZsigma range are connected via the connector, no additional wiring is necessary.

Do not connect A1 to the contact expander module!

Pilz GmbH & Co. KG, Felix-Wankel-Straße 2, 73760 Ostfildern, Germany
Telephone: +49 711 3409-0, Telefax: +49 711 3409-133, E-Mail: pilz.gmbh@pilz.de

Up to PL e of EN ISO 13849-1
PNOZ s11

Terminal configuration

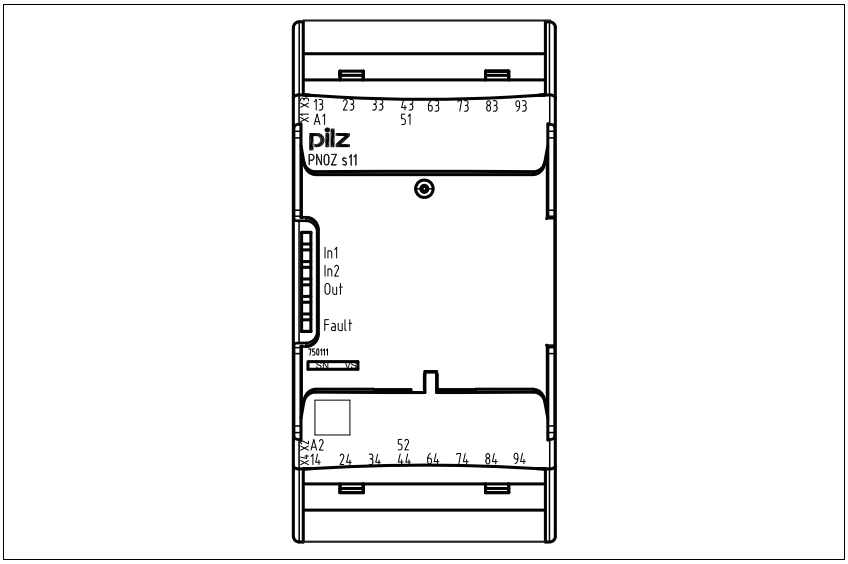

Installation

Install contact expander module without base unit:
- Ensure that the plug terminator is inserted at the side of the unit.

Connect base unit and PNOZsigma contact expander module:
- Remove the plug terminator at the side of the base unit and at the contact expander module
- Connect the base unit and the contact expander module to the supplied connector before mounting the units to the DIN rail.

Installation in control cabinet
- The safety relay should be installed in a control cabinet with a protection type of at least IP54.
- Use the notch on the rear of the unit to attach it to a DIN rail (35 mm).
- When installed vertically: Secure the unit by using a fixing element (e.g. retaining brakket or end angle).
- Push the unit upwards or downwards before lifting it from the DIN rail.

Dimensions

*with spring-loaded terminals

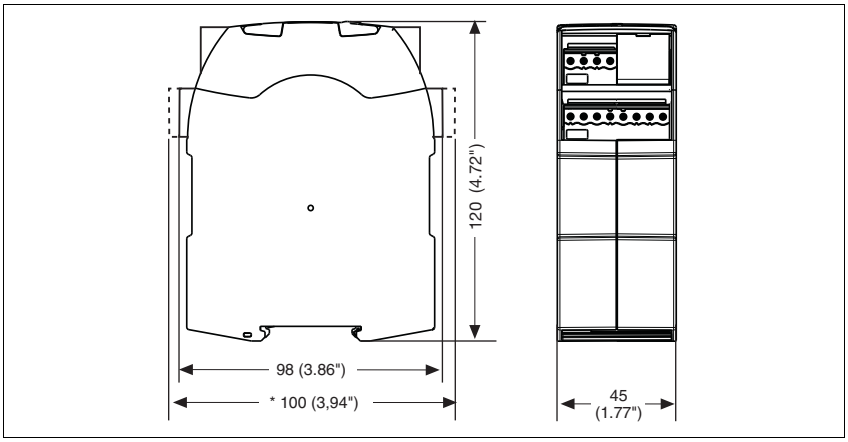

Up to PL e of EN ISO 13849-1
PNOZ s11

NOTICE

This data sheet is only intended for use during configuration. Please refer to the operating manual for installation and operation.

Service life graph

The service life graphs indicate the number of cycles from which failures due to wear must be expected. The wear is mainly caused by the electrical load; the mechanical load is negligible.

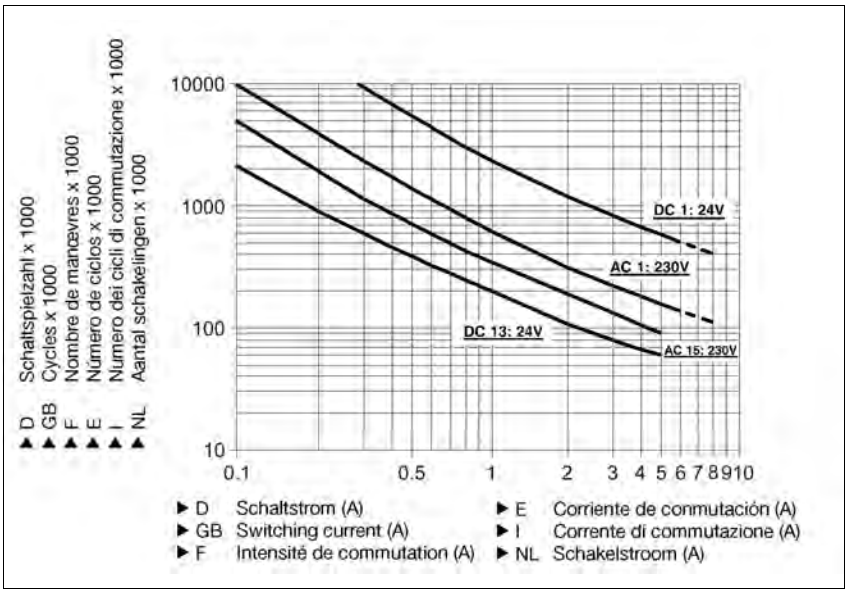

Example
- Inductive load: 0,2 A
- Utilisation category: AC15
- Contact service life: 2,000,000 cycles

Provided the application requires fewer than 2,000,000 cycles, the PFH value (see technical details) can be used in the calculation.

To increase the service life, sufficient spark suppression must be provided on all output contacts. With capacitive loads, any power surges that occur must be noted. With contactors, use freewheel diodes for spark suppression.

Technical details

Electrical data	
Supply voltage	
Supply voltage U_B DC	**24 V**
Voltage tolerance	**-20 %/+20 %**
Power consumption at U_B DC	**3.0 W**
Residual ripple DC	**20 %**
Voltage and current at	
Input circuit DC: **24.0 V**	**95.0 mA**
Number of output contacts	
Safety contacts (S) instantaneous:	**8**
Auxiliary contacts (N/C):	**1**

Pilz GmbH & Co. KG, Felix-Wankel-Straße 2, 73760 Ostfildern, Germany
Telephone: +49 711 3409-0, Telefax: +49 711 3409-133, E-Mail: pilz.gmbh@pilz.de

Up to PL e of EN ISO 13849-1
PNOZ s11

Electrical data	
Utilisation category in accordance with **EN 60947-4-1**	
Safety contacts: AC1 at **240 V**	I_{min}: **0.01 A** , I_{max}: **6.0 A** P_{max}: **1500 VA**
Safety contacts: DC1 at **24 V**	I_{min}: **0.01 A** , I_{max}: **6.0 A** P_{max}: **150 W**
Auxiliary contacts: AC1 at **240 V**	I_{min}: **0.01 A** , I_{max}: **6.0 A** P_{max}: **1500 VA**
Auxiliary contacts: DC1 at **24 V**	I_{min}: **0.01 A** , I_{max}: **6.0 A** P_{max}: **150 W**
Utilisation category in accordance with **EN 60947-5-1**	
Safety contacts: AC15 at **230 V**	I_{max}: **5.0 A**
Safety contacts: DC13 at **24 V** (6 cycles/min)	I_{max}: **5.0 A**
Auxiliary contacts: AC15 at **230 V**	I_{max}: **5.0 A**
Auxiliary contacts: DC13 at **24 V** (6 cycles/min)	I_{max}: **5.0 A**
Contact material	**AgCuNi + 0.2 µm Au**
External contact fuse protection (I_K = 1 kA) to **EN 60947-5-1**	
Blow-out fuse, quick	
Safety contacts:	**10 A**
Auxiliary contacts:	**10 A**
Blow-out fuse, slow	
Safety contacts:	**6 A**
Auxiliary contacts:	**6 A**
Circuit breaker 24 VAC/DC, characteristic B/C	
Safety contacts:	**6 A**
Auxiliary contacts:	**6 A**
Max. overall cable resistance R_{lmax} input circuits, reset circuits	
single-channel at U_B DC	**30 Ohm**
Safety-related characteristic data	
PL in accordance with **EN ISO 13849-1: 2006**	**PL e** (**Cat. 4**)
Category in accordance with **EN 954-1**	**Cat. 4**
SIL CL in accordance with **EN IEC 62061**	**SIL CL 3**
PFH in accordance with **EN IEC 62061**	**2.31E-09**
SIL in accordance with **IEC 61511**	**SIL 3**
PFD in accordance with **IEC 61511**	**2.03E-06**
T_M [year] in accordance with **EN ISO 13849-1: 2006**	**20**
Times	
Switch-on delay	
with automatic reset after power on typ.	**30 ms**
with automatic reset after power on max.	**50 ms**
Delay-on de-energisation	
with E-STOP typ.	**18 ms**
with E-STOP max.	**30 ms**
with power failure typ.	**18 ms**
with power failure max.	**30 ms**
Environmental data	
EMC	**EN 60947-5-1**, **EN 61000-6-2**, **EN 61000-6-4**
Vibration to **EN 60068-2-6**	
Frequency	**10 - 55 Hz**
Amplitude	**0.35 mm**
Climatic suitability	**EN 60068-2-78**
Airgap creepage in accordance with **EN 60947-1**	
Pollution degree	**2**
Overvoltage category	**III**
Rated insulation voltage	**250 V**
Rated impulse withstand voltage	**6.00 kV**
Ambient temperature	**-10 - 55 °C**

Up to PL e of EN ISO 13849-1
PNOZ s11

Environmental data	
Storage temperature	**-40 - 85 °C**
Protection type	
Mounting (e.g. cabinet)	**IP54**
Housing	**IP40**
Terminals	**IP20**
Mechanical data	
Housing material	
Housing	**PC**
Front	**PC**
Cross section of external conductors with screw terminals	
1 core flexible	**0.25 - 2.50 mm² , 24 - 12 AWG** No. 750111
2 core, same cross section, flexible:	
with crimp connectors, without insulating sleeve	**0.25 - 1.00 mm² , 24 - 16 AWG** No. 750111
without crimp connectors or with TWIN crimp connectors	**0.20 - 1.50 mm² , 24 - 16 AWG** No. 750111
Torque setting with screw terminals	**0.50 Nm** No. 750111
Cross section of external conductors with spring-loaded terminals: Flexible with/without crimp connectors	**0.20 - 2.50 mm² , 24 - 12 AWG** No. 751111
Spring-loaded terminals: Terminal points per connection	**2** No. 751111
Stripping length	**9 mm** No. 751111
Dimensions	
Height	**100.0 mm** No. 751111 **98.0 mm** No. 750111
Width	**45.0 mm**
Depth	**120.0 mm**
Weight	**350 g**

No. stands for order number.

It is essential to consider the relay's service life graphs. The relay outputs' safety-related characteristic data is only valid if the values in the service life graphs are met.

The PFH value depends on the switching frequency and the load on the relay output.
If the service life graphs are not accessible, the stated PFH value can be used irrespective of the switching frequency and the load, as the PFH value already considers the relay's B10d value as well as the failure rates of the other components.

All the units used within a safety function must be considered when calculating the safety characteristic data.

INFORMATION
A safety function's SIL/PL values are **not** identical to the SIL/PL values of the units that are used and may be different. We recommend that you use the PAScal software tool to calculate the safety function's SIL/PL values.

The standards current on **2006-10** apply.

Pilz GmbH & Co. KG, Felix-Wankel-Straße 2, 73760 Ostfildern, Germany
Telephone: +49 711 3409-0, Telefax: +49 711 3409-133, E-Mail: pilz.gmbh@pilz.de

Up to PL e of EN ISO 13849-1
PNOZ s11

Conventional thermal current while loading several contacts

Number of contacts	I_{th} per contact at U_B DC
1	**6.00 A**
2	**6.00 A**
3	**6.00 A**
4	**6.00 A**
5	**6.00 A**
6	**5.70 A**
7	**5.30 A**
8	**5.00 A**

Order reference

Type	Features		Terminals	Order no.
PNOZ s11		24 VDC	With screw terminal	750 111
PNOZ s11 C		24 VDC	With spring-loaded terminal	751 111

Up to PL e of EN ISO 13849-1
PNOZ s22



Contact expansion module for increasing the number of available contacts

Approvals

	PNOZ s22
TÜV	◆

Unit features

- Positive-guided relay outputs:
  - 6 safety contacts (N/O), instantaneous
  - 2 auxiliary contacts (N/C), instantaneous
- 3 safety contacts and 1 auxiliary contact each; these can be controlled separately
- Safety contacts are safely separated from all other circuits; safety contacts from Ext.1/O0 are safely separated from the safety contacts from Ext.2/O1
- Basic insulation between contacts
- LED indicator for:
  - Input state of channel Ext.1/O0
  - Input state of channel Ext.2/O1
- Plug-in connection terminals (either spring-loaded terminals or screw terminals)

Unit description

The unit meets the requirements of EN 60947-5-1, EN 60204-1 and VDE 0113-1. The contact expansion module is used to increase the number of instantaneous safety contacts available on a base unit. Base units are

- Speed monitor PNOZ s30
- PNOZmulti Mini base units PNOZ mm0.1p, PNOZ mm0.2p

The category that can be achieved in accordance with EN 954-1 and EN ISO 13849-1 depends on the category of the base unit. The contact expansion module may not exceed this.

Safety features

The unit meets the following safety requirements:

- The contact expansion module expands an existing circuit. As the output relays are monitored via the base unit's feedback loop, the safety functions on the existing circuit are transferred to the contact expansion module.
- The safety function remains effective in the case of a component failure.
- Earth fault in the feedback loop: Detected, depending on the base unit that is used.
- Earth fault in the input circuit: The output relays de-energise and the safety contacts open.

Block diagram

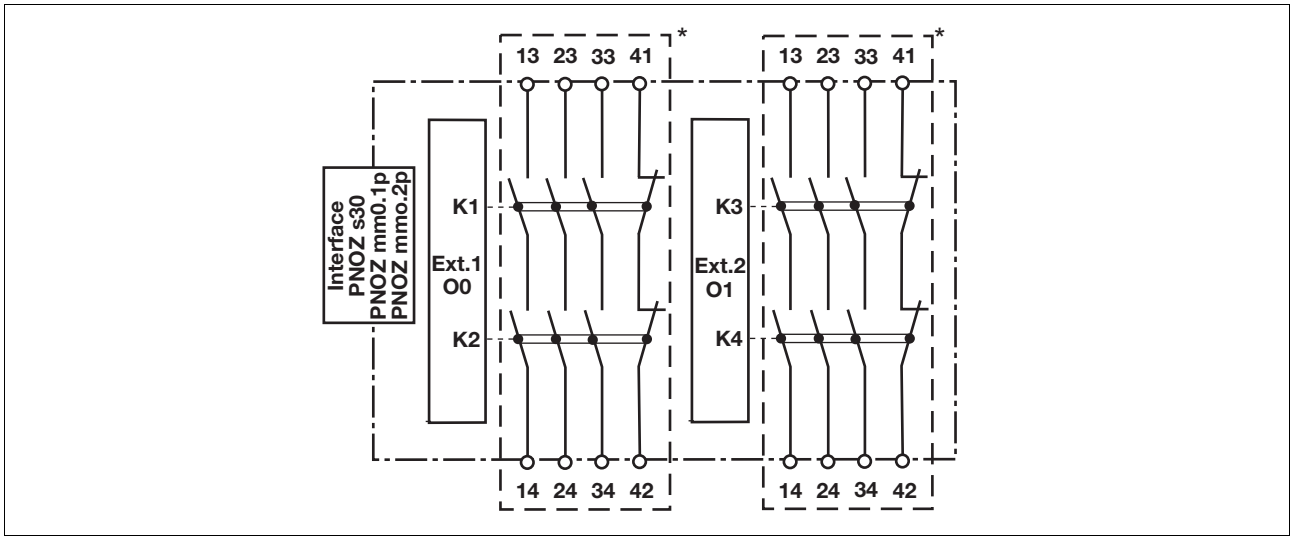

*Safe separation in accordance with EN 60947-1, 6 kV

Pilz GmbH & Co. KG, Felix-Wankel-Straße 2, 73760 Ostfildern, Germany
Telephone: +49 711 3409-0, Telefax: +49 711 3409-133, E-Mail: pilz.gmbh@pilz.de

1002374-EN-01-2011-05

Up to PL e of EN ISO 13849-1
PNOZ s22

Function description

- Dual-channel operation and supply voltage via PNOZsigma connector
- 3 safety contacts and 1 auxiliary contact each; these can be controlled separately

Wiring

Please note:
- Information given in the “Technical details” must be followed.
- The wiring guidelines in the base units' operating instructions must be taken into account.
- Outputs 13 -14, 23 -24, 33 - 34 are safety contacts; outputs 41 - 42 are auxiliary contacts (e.g. for display).
- To prevent contact welding, a fuse should be connected before the output contacts (see technical details).
- Use copper wire that can withstand 60/75 °C.
- Sufficient fuse protection must be provided on all output contacts with capacitive and inductive loads.

Preparing for operation

	AC	DC
Versorgungsspannung/Eingangskreis/ Rückführkreis Supply voltage/input circuit/feedback loop Tension d'alimentation/circuit d'entrée/ boucle de retour	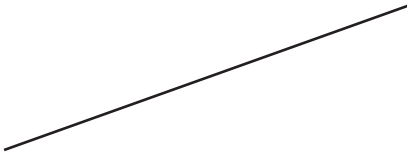	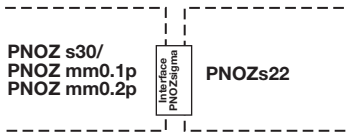

Up to PL e of EN ISO 13849-1
PNOZ s22

Terminal configuration

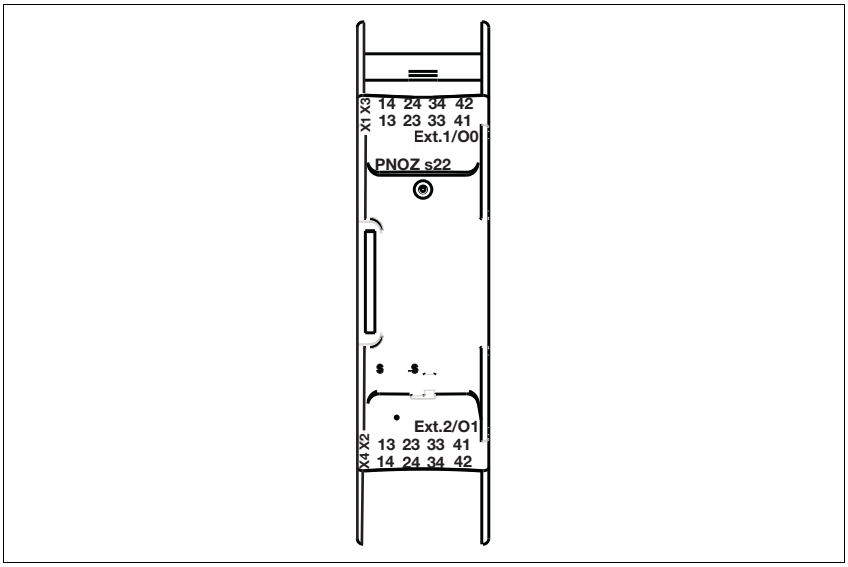

Installation

Connect the contact expansion block to the PNOZ s30 or base unit PNOZ mm0.1p/PNOZ mm0.2p

- Connect the contact expansion block using the connector supplied.

Control cabinet installation

- The safety relay should be installed in a control cabinet with a protection type of at least IP54.
- Use the notch on the rear of the unit to attach it to a DIN rail.
- Ensure the unit is mounted securely on a vertical DIN rail (35 mm) by using a fixing element (e.g. retaining bracket or an end angle).

Push the unit upwards or downwards before lifting it from the DIN rail.

Dimensions

*with spring-loaded terminals

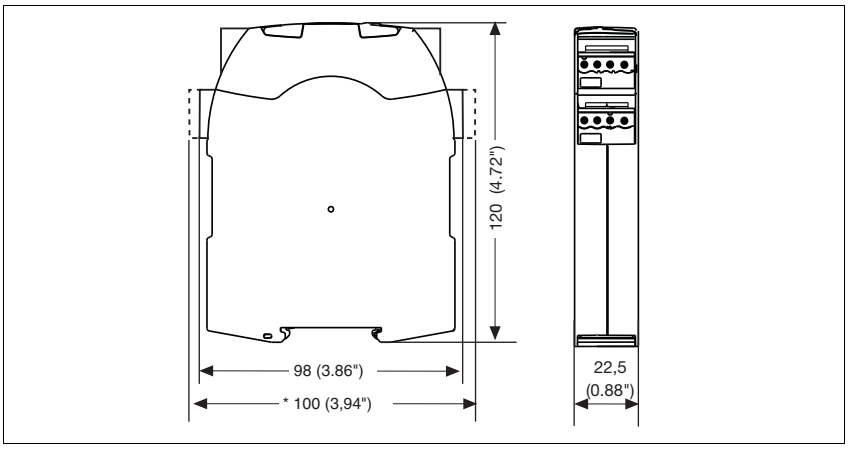

Pilz GmbH & Co. KG, Felix-Wankel-Straße 2, 73760 Ostfildern, Germany
Telephone: +49 711 3409-0, Telefax: +49 711 3409-133, E-Mail: pilz.gmbh@pilz.de

Up to PL e of EN ISO 13849-1
PNOZ s22

NOTICE

This data sheet is only intended for use during configuration. Please refer to the operating manual for installation and operation.

Service life graph

The service life graphs indicate the number of cycles from which failures due to wear must be expected. The wear is mainly caused by the electrical load; the mechanical load is negligible.

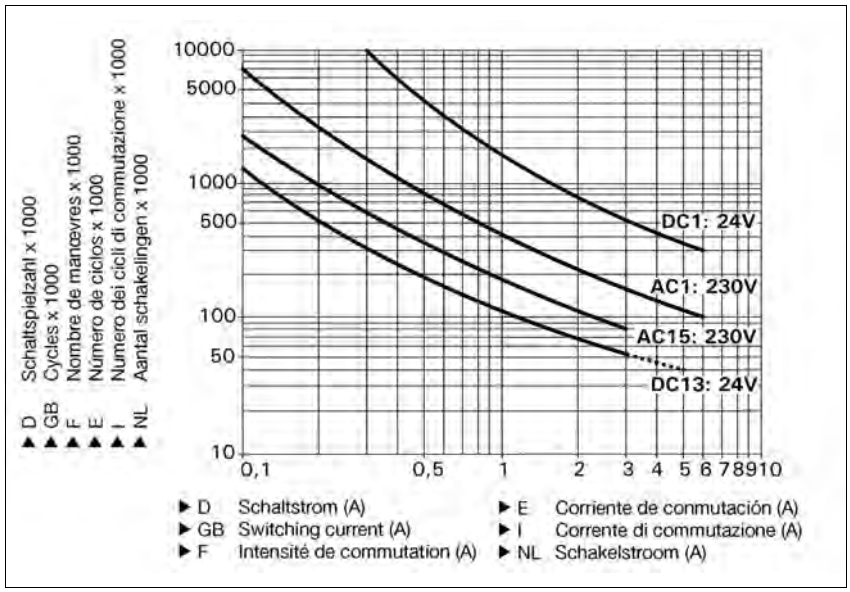

Example
- Inductive load: 0,2 A
- Utilisation category: AC15
- Contact service life: 1,000,000 cycles

Provided the application requires fewer than 1,000,000 cycles, the PFH value (see technical details) can be used in the calculation.

To increase the service life, sufficient spark suppression must be provided on all output contacts. With capacitive loads, any power surges that occur must be noted. With contactors, use freewheel diodes for spark suppression.

Technical details	
Electrical data	
Supply voltage	
Supply voltage U_B DC	**24 V**
Voltage tolerance	**-15 %/+20 %**
Power consumption at U_B DC	**1.5 W**
Number of output contacts	
Safety contacts (S) instantaneous:	**6**
Auxiliary contacts (N/C):	**2**

Pilz GmbH & Co. KG, Felix-Wankel-Straße 2, 73760 Ostfildern, Germany
Telephone: +49 711 3409-0, Telefax: +49 711 3409-133, E-Mail: pilz.gmbh@pilz.de

Up to PL e of EN ISO 13849-1
PNOZ s22

Electrical data	
Utilisation category in accordance with **EN 60947-4-1**	
Safety contacts: AC1 at **240 V**	I_{min}: **0.01 A** , I_{max}: **6.0 A** P_{max}: **1500 VA**
Safety contacts: DC1 at **24 V**	I_{min}: **0.01 A** , I_{max}: **6.0 A** P_{max}: **150 W**
Auxiliary contacts: AC1 at **240 V**	I_{min}: **0.01 A** , I_{max}: **6.0 A** P_{max}: **1500 VA**
Auxiliary contacts: DC1 at **24 V**	I_{min}: **0.01 A** , I_{max}: **6.0 A** P_{max}: **150 W**
Utilisation category in accordance with **EN 60947-5-1**	
Safety contacts: AC15 at **230 V**	I_{max}: **3.0 A**
Safety contacts: DC13 at **24 V** (6 cycles/min)	I_{max}: **4.0 A**
Auxiliary contacts: AC15 at **230 V**	I_{max}: **4.0 A**
Auxiliary contacts: DC13 at **24 V** (6 cycles/min)	I_{max}: **4.0 A**
Contact material	**AgCuNi + 0.2 µm Au**
External contact fuse protection (I_K = 1 kA) to **EN 60947-5-1**	
Blow-out fuse, quick	
Safety contacts:	**6 A**
Auxiliary contacts:	**6 A**
Blow-out fuse, slow	
Safety contacts:	**4 A**
Auxiliary contacts:	**4 A**
Circuit breaker 24 VAC/DC, characteristic B/C	
Safety contacts:	**4 A**
Auxiliary contacts:	**4 A**
Safety-related characteristic data	
PL in accordance with **EN ISO 13849-1: 2006**	**PL e** (**Cat. 4**)
Category in accordance with **EN 954-1**	**Cat. 4**
SIL CL in accordance with **EN IEC 62061**	**SIL CL 3**
PFH in accordance with **EN IEC 62061**	**2.50E-09**
SIL in accordance with **IEC 61511**	**SIL 3**
PFD in accordance with **IEC 61511**	**2.13E-05**
T_M [year] in accordance with **EN ISO 13849-1: 2006**	**20**
Times	
Switch-on delay	
with automatic reset typ.	**11 ms**
with automatic reset max.	**20 ms**
Delay-on de-energisation	
with E-STOP typ.	**12 ms**
with E-STOP max.	**20 ms**
Environmental data	
EMC	**EN 60947-5-1**, **EN 61000-6-2**, **EN 61000-6-4**
Vibration to **EN 60068-2-6**	
Frequency	**10 - 55 Hz**
Amplitude	**0.35 mm**
Climatic suitability	**EN 60068-2-78**
Airgap creepage in accordance with **EN 60947-1**	
Pollution degree	**2**
Overvoltage category	**III**
Rated insulation voltage	**250 V**
Rated impulse withstand voltage	**6.00 kV**
Ambient temperature	**-10 - 55 °C**
Storage temperature	**-40 - 80 °C**
Protection type	
Mounting (e.g. cabinet)	**IP54**
Housing	**IP40**
Terminals	**IP20**

Pilz GmbH & Co. KG, Felix-Wankel-Straße 2, 73760 Ostfildern, Germany
Telephone: +49 711 3409-0, Telefax: +49 711 3409-133, E-Mail: pilz.gmbh@pilz.de

Up to PL e of EN ISO 13849-1
PNOZ s22

Mechanical data	
Housing material	
Housing	**PC**
Front	**PC**
Cross section of external conductors with screw terminals	
1 core flexible	**0.25 - 2.50 mm² , 24 - 12 AWG** No. 750132
2 core, same cross section, flexible:	
with crimp connectors, without insulating sleeve	**0.25 - 1.00 mm² , 24 - 16 AWG** No. 750132
without crimp connectors or with TWIN crimp connectors	**0.20 - 1.50 mm² , 24 - 16 AWG** No. 750132
Torque setting with screw terminals	**0.50 Nm** No. 750132
Cross section of external conductors with spring-loaded terminals: Flexible with/without crimp connectors	**0.20 - 2.50 mm² , 24 - 12 AWG** No. 751132
Spring-loaded terminals: Terminal points per connection	**2** No. 751132
Stripping length	**9 mm** No. 751132
Dimensions	
Height	**96.0 mm**
Width	**22.5 mm**
Depth	**120.0 mm**
Weight	**265 g**

No. stands for order number.

It is essential to consider the relay's service life graphs. The relay outputs' safety-related characteristic data is only valid if the values in the service life graphs are met.
The PFH value depends on the switching frequency and the load on the relay output.

If the service life graphs are not accessible, the stated PFH value can be used irrespective of the switching frequency and the load, as the PFH value already considers the relay's B10d value as well as the failure rates of the other components.

NOTICE
The safety-related characteristic data applies per channel of the contact expansion block. The safety-related characteristic data of the base unit and all other devices that are used must be taken into account when calculating the safety function. We recommend that you use the PAScal software tool to calculate the safety function's SIL/PL values.

The standards current on **2010-04** apply.

Up to PL e of EN ISO 13849-1
PNOZ s22

Conventional thermal current

Conventional thermal current when the contacts from Ext.1/O0 **and** Ext.2/O1 are under load simultaneously.

Number of contacts used at a time	I_{th} [A] per contact
1	**6.00 A**
2	**5.00 A**
3	**4.00 A**

Conventional thermal current when either the contacts from Ext.1/O0 **or** the contacts from Ext.2/O1 are under load. They may **not** be under load simultaneously.

Number of contacts in total	I_{th} [A] per contact
2	**6.00 A**
3	**5.00 A**

Order reference

Type	Features		Terminals	Order no.
PNOZ s22		24 VDC	With screw terminal	750 132
PNOZ s22 C		24 VDC	With spring-loaded terminal	751 132

Pilz GmbH & Co. KG, Felix-Wankel-Straße 2, 73760 Ostfildern, Germany
Telephone: +49 711 3409-0, Telefax: +49 711 3409-133, E-Mail: pilz.gmbh@pilz.de

Up to PL e of EN ISO 13849-1
PNOZ s9



Contact expander module for increasing the number of available contacts, Pulse-on timer relay for step-by-step control of movement sequences, Delay-on energisation timer for unlocking an interlock with delay, Shutdown of application with delay-on de-energistaion, controlled stop

Approvals

	PNOZ s9
c UL us LISTED	◆
TÜV SÜD	◆
CCC	◆

Unit features

- Positive-guided relay outputs, either instantaneous, delay-on de-energisation (also retriggerable), pulsing or delay-on energisation:
  - 3 safety contacts
  - 1 auxiliary contact
- Safe separation of safety contacts 17-18, 27-28, 37-38 from all other circuits
- Switch-on time, pulse time or delay-on de-energisation selectable
- LED for:
  - Supply voltage
  - Input status, channel 1
  - Input status, channel 2
  - Switch status channel 1/2
  - Reset circuit
  - Errors
- Plug-in connection terminals (either spring-loaded terminals or screw terminals)

Unit description

The unit meets the requirements of EN 60947-5-1, EN 60204-1 and VDE0113-1. In conjunction with a base unit the unit is used as a

- Contact expansion module to increase the number of contacts available on a base unit. Base units are all safety relays with feedback loop monitoring.
- Pulse relay
  - In accordance with EN ISO 12100-1 and EN ISO 12100-2 (inching circuit for limited movement of hazardous machine components during installation, set up and positioning)
  - in safety circuits in accordance with VDE 0113 and EN 60204-1 (e.g. on movable guards)
- Safe timer relays
  - in accordance with EN 1088 (release with delay through timer)
  - in safety circuits in accordance with VDE 0113-1 and EN 60204-1 (e.g. on movable guards)

The category that can be achieved in accordance with EN 954-1 and EN ISO 13849-1 depends on the category of the base unit. The contact expansion module may not exceed this.

- The unit can also be used without a base unit as a pulse relay or safe timer.

The unit is designed for use with

- Safety relays from the PNOZ X, PNOZsigma, PNOZelog, PNOZmulti series
- Safety gate monitors from the PST series
- Two-hand relays from the PNOZsigma, P2HZ series

Safety features

The unit meets the following safety requirements:

- The unit monitors its own output contacts.
- The safety function remains effective in the case of a component failure.
- Earth fault in the feedback loop is detected.
- Earth fault in the input circuit: The output relays de-energise and the safety contacts open.
- The unit has an electronic fuse.

Up to PL e of EN ISO 13849-1
PNOZ s9

Block diagram

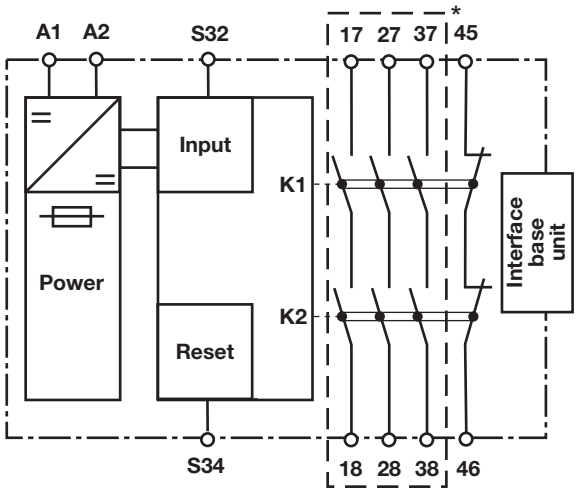

*Safe separation in accordance with EN 60947-1, 6 kV

Function description

- Delay-on de-energisation, not retriggerable
  If the supply voltage at the input circuit is interrupted, the safety contacts will open once the set release time has elapsed, even if the safety function is cancelled during the delay time. The unit cannot be reactivated until the delay time has elapsed.
- Delay-on de-energisation, retriggerable
  (only possible as a standalone application or with the PNOZsigma base unit!)
  If the supply voltage at the input circuit is interrupted, the safety contacts will open once the set release time has elapsed.
  If the safety function is cancelled during the delay time (e.g. safety gate closed), the unit will remain active.
- Pulse on switching on
  The safety contacts close when supply voltage is applied, the feedback loop is closed and finally the input circuit is closed. The safety contacts are reopened once the pulse time has elapsed.
  If the input circuit is opened for more than 10 ms during the pulse time, the safety contacts will open immediately and the auxiliary contact will be closed.
- Delay-on energisation
  The set delay time is started when supply voltage is applied, the feedback loop is closed and finally the input circuit is closed.
  If the input circuit and feedback loop are closed once the delay time has elapsed, the safety contacts will close and the auxiliary contact will be opened.
  If the input circuit is opened for more than 10 ms, the safety contacts will open immediately and the auxiliary contact will be closed.

with PNOZsigma base unit:

- Dual-channel operation via PNOZsigma connector

with other base units or without base unit:

- Single-channel operation: one input circuit affects the output relays

Pilz GmbH & Co. KG, Felix-Wankel-Straße 2, 73760 Ostfildern, Germany
Telephone: +49 711 3409-0, Telefax: +49 711 3409-133, E-Mail: pilz.gmbh@pilz.de

Up to PL e of EN ISO 13849-1
PNOZ s9

Timing diagrams

Delay-on de-energisation, not retriggerable

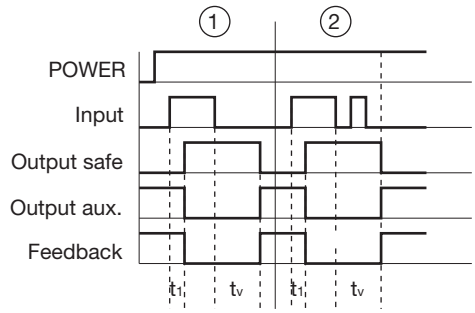

Key
- Power: Supply voltage
- Input: Input circuit S32
- Output safe: Safety contacts 17-18, 27-28, 37-38
- Output aux: Auxiliary contact 45-46
- Feedback: Feedback loop S34
- t_1: Switch-on delay
- t_v: Delay time
- ①: Delay-on de-energisation with the time t_v
- ②: No retriggering in the time t_v

Delay-on de-energisation, retriggerable

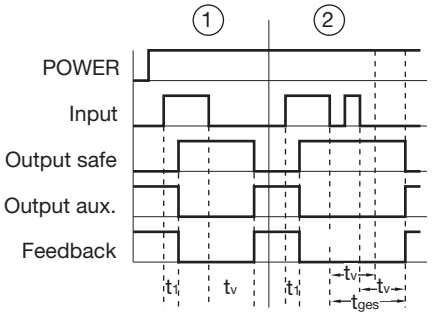

Key
- Power: Supply voltage
- Input: Input circuit S32
- Output safe: Safety contacts 17-18, 27-28, 37-38
- Output aux: Auxiliary contact 45-46
- Feedback: Feedback loop S34
- t_1: Switch-on delay
- t_v: Delay-on de-energisation
- t_{ges}: Overall delay time
- ①: Delay-on de-energisation with the time t_v
- ②: Retriggering in the time t_v for overall delay-on de-energisation t_{ges}

Up to PL e of EN ISO 13849-1
PNOZ s9

Pulse on switching on

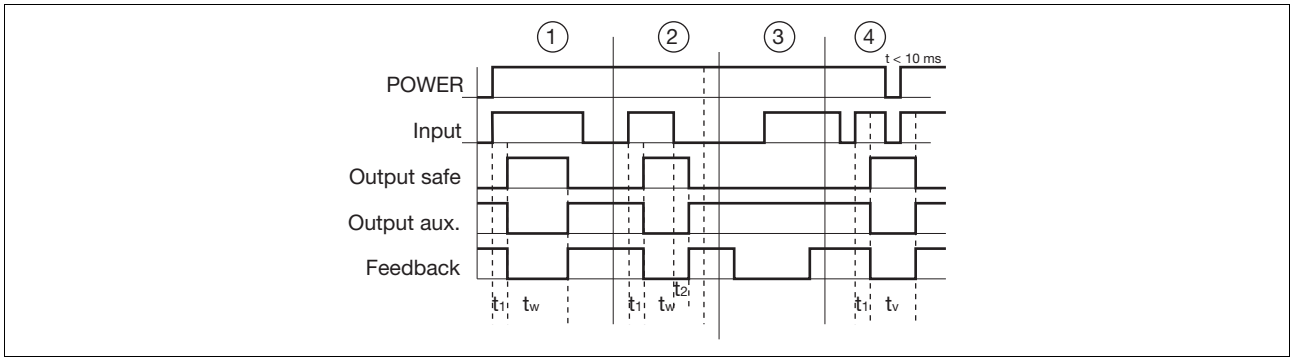

Key

- Power: Supply voltage
- Input: Input circuit S32
- Output safe: Safety contacts 17-18, 27-28, 37-38
- Output aux: Auxiliary contact 45-46
- Feedback: Feedback loop S34
- t_1: Switch-on delay
- t_2: Delay-on de-energisation
- t_w: Pulse time
- ①: Normal operating cycle
- ②: Fault: Input circuit opened too early
- ③: Fault: Feedback loop closed too late
- ④: Normal operating cycle with supply interruption < 10 ms

Delay-on energisation

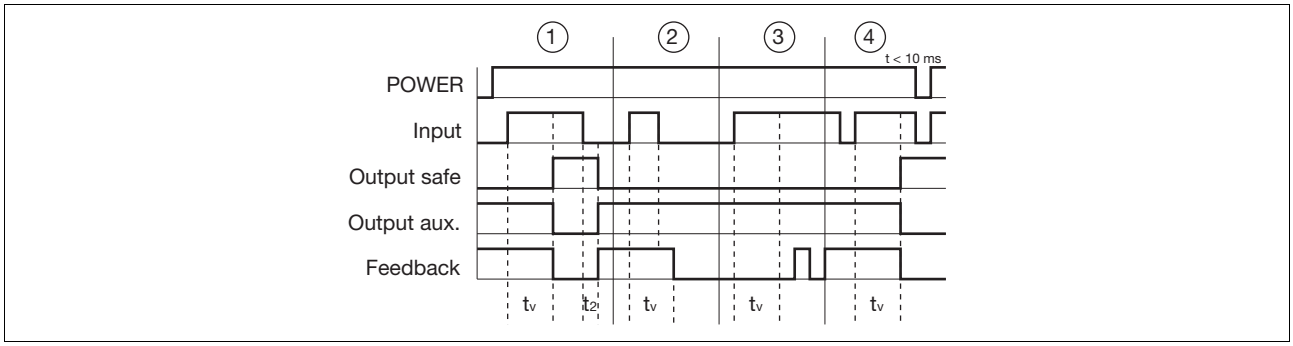

Key

- Power: Supply voltage
- Input: Input circuit S32
- Output safe: Safety contacts 17-18, 27-28, 37-38
- Output aux: Auxiliary contact 45-46
- Feedback: Feedback loop S34
- t_2: Delay-on de-energisation
- tv: Delay time
- ①: Normal operating cycle
- ②: Fault: Input circuit opened too early
- ③: Fault: Feedback loop closed too late after t_2 elapsed
- ④: Normal operating cycle with supply interruption < 10 ms

Wiring

Please note:

- Information given in the “Technical details” must be followed.
- Outputs 17-18, 27-28, 37-38 are safety contacts, output 45-46 is an auxiliary contact (e.g. for display).
- To prevent contact welding, a fuse should be connected before the output contacts (see technical details).
- Calculation of the max. cable runs I_{max} in the input circuit:

$$I_{max} = \frac{R_{lmax}}{R_l / km}$$

R_{lmax} = max. overall cable resistance (see technical details)
R_l /km = cable resistance/km

- Use copper wire that can withstand 60/75 °C.
- Sufficient fuse protection must be provided on all output contacts with capacitive and inductive loads.

Pilz GmbH & Co. KG, Felix-Wankel-Straße 2, 73760 Ostfildern, Germany
Telephone: +49 711 3409-0, Telefax: +49 711 3409-133, E-Mail: pilz.gmbh@pilz.de

Up to PL e of EN ISO 13849-1
PNOZ s9

Preparing for operation

- Supply voltage

Supply voltage	AC	DC
		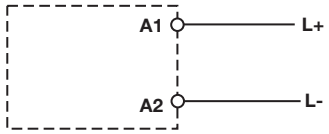

- 1-channel input circuit/feedback loop

Input circuit	Input circuit	Feedback circuit
Without base unit (standalone)	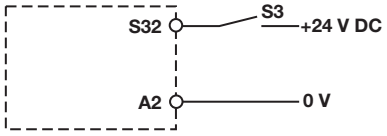	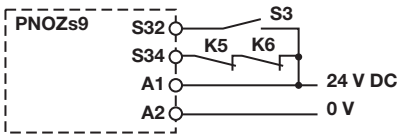
Base unit: Safety relay PNOZ X	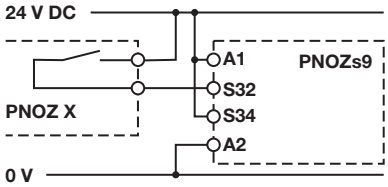	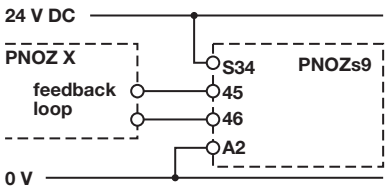 The inputs that evaluate the feedback loop will depend on the base unit and application.
Base unit: Safety relay PNOZelog; driven via semiconductor outputs (24 VDC)	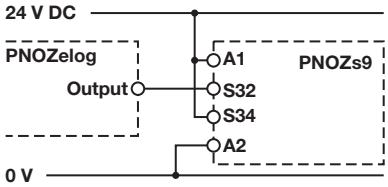	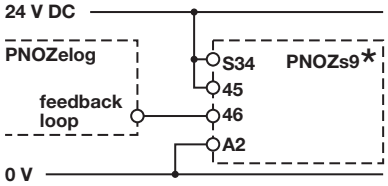 The inputs that evaluate the feedback loop will depend on the base unit and application. * PNOZ e1p only; all other PNOZelog safety relays without delay-on de-energisation with PNOZ s9

Up to PL e of EN ISO 13849-1
PNOZ s9

▸ 2-channel input circuit

	Base unit: Safety relays PNOZ s3, PNOZ s4, PNOZ s5	Base unit: Safety relays PNOZ s1, PNOZ s2
The input circuit is connected and evaluated via the connector.	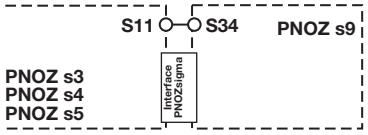	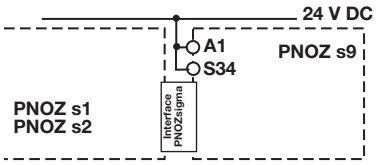
	Base unit: Two-hand control unit PNOZ s6	Base unit: Two-hand control unit PNOZ s6.1
The input circuit is connected and evaluated via the connector.	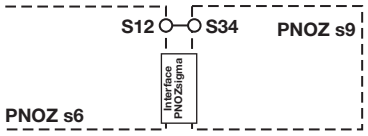	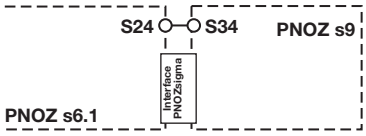

▸ Application

	without feedback loop	with feedback loop
without base unit	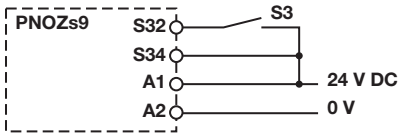	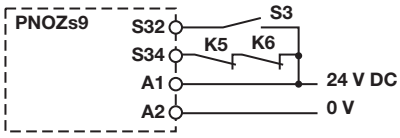

▸ Key

S3	Reset button

Pilz GmbH & Co. KG, Felix-Wankel-Straße 2, 73760 Ostfildern, Germany
Telephone: +49 711 3409-0, Telefax: +49 711 3409-133, E-Mail: pilz.gmbh@pilz.de

Up to PL e of EN ISO 13849-1
PNOZ s9

Terminal configuration

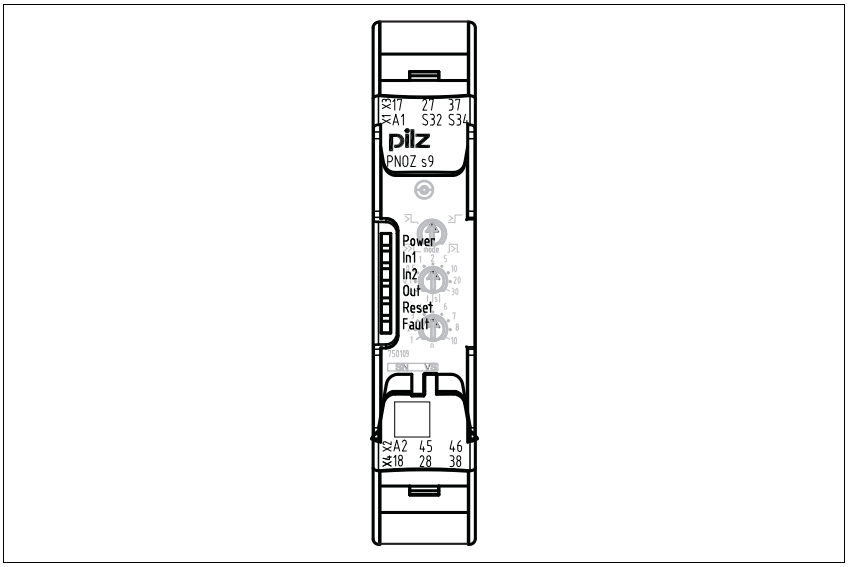

Installation

Install contact expander module without base unit:

- Ensure that the plug terminator is inserted at the side of the unit.

Connect base unit and PNOZsigma contact expander module:

- Remove the plug terminator at the side of the base unit and at the contact expander module
- Connect the base unit and the contact expander module to the supplied connector before mounting the units to the DIN rail.

Installation in control cabinet

- The safety relay should be installed in a control cabinet with a protection type of at least IP54.
- Use the notch on the rear of the unit to attach it to a DIN rail (35 mm).
- When installed vertically: Secure the unit by using a fixing element (e.g. retaining brakket or end angle).
- Push the unit upwards or downwards before lifting it from the DIN rail.

Dimensions

*with spring-loaded terminals

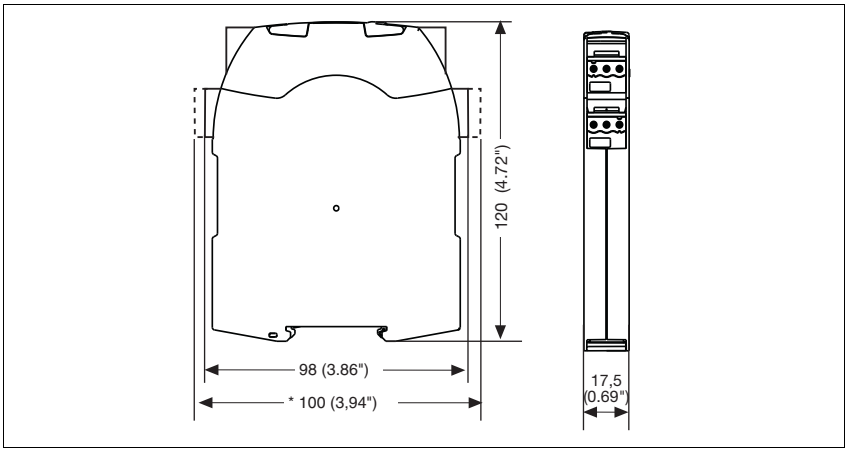

Up to PL e of EN ISO 13849-1
PNOZ s9

NOTICE

This data sheet is only intended for use during configuration. Please refer to the operating manual for installation and operation.

Service life graph

The service life graphs indicate the number of cycles from which failures due to wear must be expected. The wear is mainly caused by the electrical load; the mechanical load is negligible.

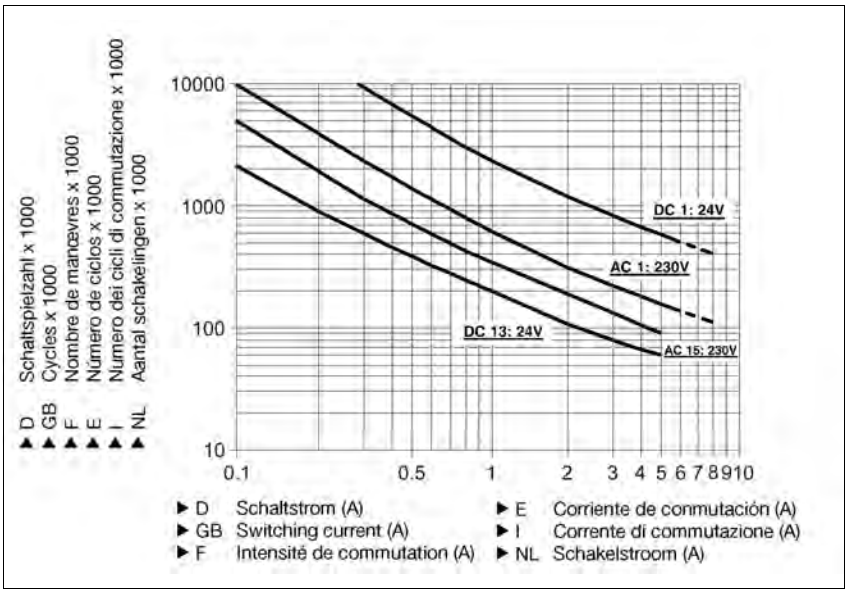

Example
- Inductive load: 0,2 A
- Utilisation category: AC15
- Contact service life: 2,000,000 cycles

Provided the application requires fewer than 2,000,000 cycles, the PFH value (see technical details) can be used in the calculation.

To increase the service life, sufficient spark suppression must be provided on all output contacts. With capacitive loads, any power surges that occur must be noted. With contactors, use freewheel diodes for spark suppression.

Technical details

Electrical data	
Supply voltage	
Supply voltage U_B DC	**24 V**
Voltage tolerance	**-20 %/+20 %**
Power consumption at U_B DC	**2.0 W**
Residual ripple DC	**20 %**
Typ. supply current at A1	**70 mA**
Voltage and current at	
Input circuit DC:	**15.0 mA**
Feedback loop DC: **24.0 V**	**15.0 mA**
Max. inrush current impulse	
A1	**0.70 A**
Input circuit	**0.10 A**
Feedback loop	**0.10 A**

Pilz GmbH & Co. KG, Felix-Wankel-Straße 2, 73760 Ostfildern, Germany
Telephone: +49 711 3409-0, Telefax: +49 711 3409-133, E-Mail: pilz.gmbh@pilz.de

Up to PL e of EN ISO 13849-1
PNOZ s9

Electrical data	
Number of output contacts	
Safety contacts (N/O), delayed:	**3**
Auxiliary contacts (N/C), delayed:	**1**
Utilisation category in accordance with **EN 60947-4-1**	
Safety contacts: AC1 at **240 V**	I_{min}: **0.01 A** , I_{max}: **6.0 A** P_{max}: **1500 VA**
Safety contacts: DC1 at **24 V**	I_{min}: **0.01 A** , I_{max}: **6.0 A** P_{max}: **150 W**
Auxiliary contacts: AC1 at **240 V**	I_{min}: **0.01 A** , I_{max}: **6.0 A** P_{max}: **1500 VA**
Auxiliary contacts: DC1 at **24 V**	I_{min}: **0.01 A** , I_{max}: **6.0 A** P_{max}: **150 W**
Utilisation category in accordance with **EN 60947-5-1**	
Safety contacts: AC15 at **230 V**	I_{max}: **5.0 A**
Safety contacts: DC13 at **24 V** (6 cycles/min)	I_{max}: **5.0 A**
Auxiliary contacts: AC15 at **230 V**	I_{max}: **5.0 A**
Auxiliary contacts: DC13 at **24 V** (6 cycles/min)	I_{max}: **5.0 A**
Conventional thermal current	**6.0 A**
Contact material	**AgCuNi + 0.2 µm Au**
External contact fuse protection (I_K = 1 kA) to **EN 60947-5-1**	
Blow-out fuse, quick	
Safety contacts:	**10 A**
Auxiliary contacts:	**10 A**
Blow-out fuse, slow	
Safety contacts:	**6 A**
Auxiliary contacts:	**6 A**
Circuit breaker 24 VAC/DC, characteristic B/C	
Safety contacts:	**6 A**
Auxiliary contacts:	**6 A**
Max. overall cable resistance R_{lmax}	
A1/A2	**20 Ohm**
Input circuit	**30 Ohm**
Feedback loop	**30 Ohm**
Safety-related characteristic data	
PL in accordance with **EN ISO 13849-1: 2006**	**PL e** (**Cat. 4**)
Category in accordance with **EN 954-1**	**Cat. 4**
SIL CL in accordance with **EN IEC 62061**	**SIL CL 3**
PFH in accordance with **EN IEC 62061**	**2.34E-09**
SIL in accordance with **IEC 61511**	**SIL 3**
PFD in accordance with **IEC 61511**	**2.75E-05**
T_M [year] in accordance with **EN ISO 13849-1: 2006**	**20**
Times	
Switch-on delay	
with manual reset typ.	**60 ms**
with manual reset max.	**80 ms**
Delay-on de-energisation	
with E-STOP typ.	**40 ms**
with E-STOP max.	**50 ms**
Recovery time at max. switching frequency 1/s	
after power failure	**800 ms**

Up to PL e of EN ISO 13849-1
PNOZ s9

Times	
Delay time t_V: selectable	**0,00 s**; **0,10 s**; **0,20 s**; **0,30 s**; **0,40 s**; **0,50 s**; **0,60 s**; **0,70 s**; **0,80 s**; **1,00 s**; **1,50 s**; **2,00 s**; **2,50 s**; **3,00 s**; **3,50 s**; **4,00 s**; **5,00 s**; **6,00 s**; **7,00 s**; **8,00 s**; **10,00 s**; **12,00 s**; **14,00 s**; **15,00 s**; **16,00 s**; **20,00 s**; **25,00 s**; **30,00 s**; **35,00 s**; **40,00 s**; **50,00 s**; **60,00 s**; **70,00 s**; **80,00 s**; **90,00 s**; **100,00 s**; **120,00 s**; **140,00 s**; **150,00 s**; **160,00 s**; **180,00 s**; **200,00 s**; **210,00 s**; **240,00 s**; **300,00 s**
Repetition accuracy	**+/-1 % + +/-20 ms**
Repetition accuracy in the case of a fault	**+/-15 % + +/-20 ms**
Time accuracy	**+/-1 % + +/-20 ms**
Supply interruption before de-energisation	**10 ms**
Supply interruption before de-energisation in the input circuit	**10.0 ms**
Environmental data	
EMC	**EN 60947-5-1**, **EN 61000-6-2**, **EN 61000-6-4**
Vibration to **EN 60068-2-6**	
Frequency	**10 - 55 Hz**
Amplitude	**0.35 mm**
Climatic suitability	**EN 60068-2-78**
Airgap creepage in accordance with **EN 60947-1**	
Pollution degree	**2**
Overvoltage category	**III**
Rated insulation voltage	**250 V**
Rated impulse withstand voltage	**6.00 kV**
Ambient temperature	**-15 - 55 °C**
Storage temperature	**-40 - 85 °C**
Protection type	
Mounting (e.g. cabinet)	**IP54**
Housing	**IP40**
Terminals	**IP 20**
Mechanical data	
Housing material	
Housing	**PC**
Front	**PC**
Cross section of external conductors with screw terminals	
1 core flexible	**0.25 - 2.50 mm² , 24 - 12 AWG** No. 750109
2 core, same cross section, flexible:	
with crimp connectors, without insulating sleeve	**0.25 - 1.00 mm² , 24 - 16 AWG** No. 750109
without crimp connectors or with TWIN crimp connectors	**0.20 - 1.50 mm² , 24 - 16 AWG** No. 750109
Torque setting with screw terminals	**0.50 Nm** No. 750109
Cross section of external conductors with spring-loaded terminals: Flexible with/without crimp connectors	**0.20 - 2.50 mm² , 24 - 12 AWG** No. 751109, 751189
Spring-loaded terminals: Terminal points per connection	**2** No. 751109, 751189
Stripping length	**9 mm** No. 751109, 751189
Dimensions	
Height	**100.0 mm** No. 751109, 751189 **96.0 mm** No. 750109
Width	**17.5 mm**
Depth	**120.0 mm**
Weight	**175 g** No. 751189 **176 g** No. 751109 **177 g** No. 750109

No. stands for order number.

Pilz GmbH & Co. KG, Felix-Wankel-Straße 2, 73760 Ostfildern, Germany
Telephone: +49 711 3409-0, Telefax: +49 711 3409-133, E-Mail: pilz.gmbh@pilz.de

Up to PL e of EN ISO 13849-1
PNOZ s9

It is essential to consider the relay's service life graphs. The relay outputs' safety-related characteristic data is only valid if the values in the service life graphs are met.

The PFH value depends on the switching frequency and the load on the relay output.
If the service life graphs are not accessible, the stated PFH value can be used irrespective of the switching frequency and the load, as the PFH value already considers the relay's B10d value as well as the failure rates of the other components.

All the units used within a safety function must be considered when calculating the safety characteristic data.

INFORMATION
A safety function's SIL/PL values are **not** identical to the SIL/PL values of the units that are used and may be different. We recommend that you use the PAScal software tool to calculate the safety function's SIL/PL values.

The standards current on **2007-02** apply.

Order reference

Type	Features		Terminals	Order no.
PNOZ s9		24 VDC	With screw terminals	750 109
PNOZ s9 C		24 VDC	With spring-loaded terminals	751 109
PNOZ s9 C (coated version)		24 VDC	With spring-loaded terminals	751 189

Up to PL e of EN ISO 13849-1
PNOZ s30



Speed monitor for safe monitoring of standstill, speed, speed range, position and direction.

Approvals

	PNOZ s30
c UL us LISTED	◆
TÜV SÜD	◆
CCC	◆

Unit features

- Measured value recorded by
  - Incremental encoder
  - Proximity switch
  - Analogue voltage input
- Measured variables
  - Standstill
  - Speed
  - Speed range
  - Position
  - Direction
  - Analogue voltage (track S)
- Positive-guided relay outputs
  - 2 safety contacts
  - 2 auxiliary contacts
- Semiconductor outputs
  - 4 auxiliary outputs
- Expansion interface for 2 more safe relay outputs
- Can be configured via the display on the speed monitor
- Configuration is stored on a chip card
- Display
  - Current frequencies
  - Current position
  - Warning and error messages
- Status and fault LEDs
- Rotary encoder connection technology:
  RJ45 socket
- See order reference for unit types

Unit description

The speed monitor monitors standstill, speed, speed range, position and direction in accordance with
EN ISO 13849-1 up to PL e and
EN IEC 62061 up to SIL CL 3.

Safety features

The relay conforms to the following safety criteria:

- The circuit is redundant with built-in self-monitoring.
- The safety function remains effective in the case of a component failure.

Block diagram

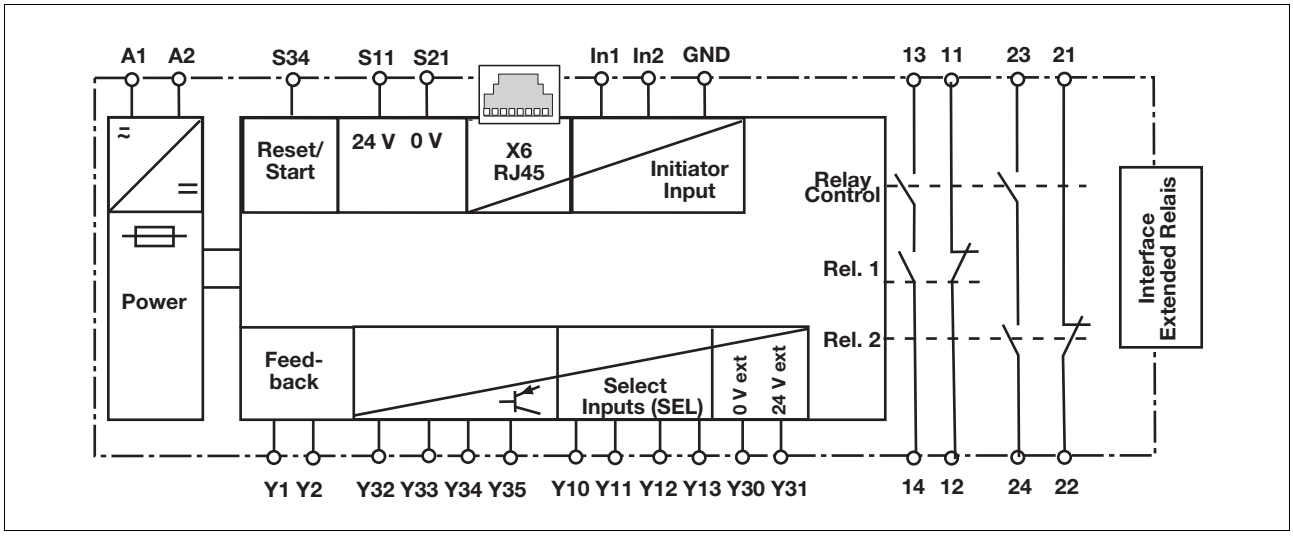

Pilz GmbH & Co. KG, Felix-Wankel-Straße 2, 73760 Ostfildern, Germany
Telephone: +49 711 3409-0, Telefax: +49 711 3409-133, E-Mail: pilz.gmbh@pilz.de

1001758-EN-02-2011-11

Up to PL e of EN ISO 13849-1
PNOZ s30

NOTICE
The individual blocks are galvanically isolated from each other:
- Supply voltage: A1, A2
- Encoder and initiator inputs: GND, In1, In2, RJ45 socket and shield
- Reset and feedback circuits: S21, S11, S34, Y1, Y2
- Semiconductor outputs and select inputs: Y30, Y31, Y32, Y33, Y34, Y35, Y10, Y11, Y12, Y13
- Relay output 13, 14
- Relay output 11, 12
- Relay output 23, 24
- Relay output 21, 22

If possible, the connections for the various earth potentials (GND, S21, Y30 and A2) should not be connected, as noise susceptibility can be increased significantly as a result.

Function description

Proximity switches or rotary encoders record measured values, which are evaluated in the speed monitor **PNOZ s30**. There are 9 monitoring functions (F1 ... F9), which are performed simultaneously.
Up to 16 different parameter sets (P0 ... P15) for the monitoring functions can be selected via the select inputs. Configuration of the monitoring functions is menu-driven, using a rotary knob. The outputs switch depending on the configuration.
An interface is available to connect a contact expansion module PNOZsigma, enabling the number of outputs to be expanded.

Monitoring functions

The following monitoring functions can be configured:
Standstill
With standstill monitoring, the output is switched on when the value falls below the stated standstill value; if the standstill value is exceeded, the output switches off.
Speed
With overspeed monitoring, the output switches off when the stated value is exceeded.

Speed range
With range monitoring, the output switches off if the rotational speed (velocity, frequency) is outside the configured range.
Position
Position monitoring is activated via a rising edge at the reset input. The current position is adopted as a reference position in the middle of the position window (configured window width) and the assigned output is switched on.
The output will stay switched on provided the value is within the position window.

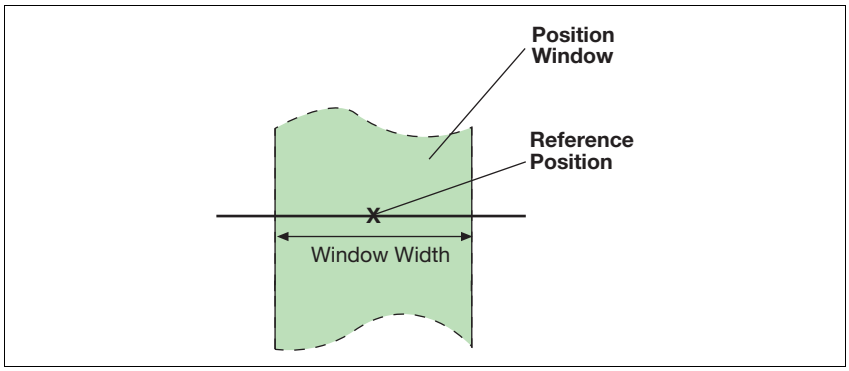

If the value moves outside the configured range, position monitoring is reset and the assigned outputs are switched off. Position monitoring can be restarted via a rising edge at the reset input
A max. of 4 positions can be configured to be monitored simultaneously.
Please note:
- Active position monitoring is not restarted by another rising edge at the reset input.
- Position monitoring cannot be used if proximity switches are employed.

Up to PL e of EN ISO 13849-1
PNOZ s30

Direction
If the direction is to be detected safely, this function must be linked to a safety contact.
- If "Direct. Right" is configured, the safety output is switched on during normal operation in clockwise rotation.
- If "Direct. Left" is configured, the safety output is switched on during normal operation in anti-clockwise rotation.

For both directions, a tolerance can be entered for the wrong direction. In other words, the drive can run in the wrong direction up to the set tolerance value, without the assigned output switching off.
If an output has been switched off, it cannot switch back on again until the drive has been run in the right direction up to the tolerance value.
Please note: Direction cannot be detected if proximity switches are used.

Monitoring for broken shearpins
An additional proximity switch can be connected to track Z to monitor for broken shearpins

Hysteresis
For each switching function F1 ... F9 (with the exception of direction and position), a hysteresis can be configured. This prevents the outputs on the speed monitor from bouncing if there are fluctuations around the response value. The hysteresis becomes effective when the output is switched on:
Switch-on value = switching threshold – hysteresis
For the lower range limit:
Switch-on value = switching threshold + hysteresis

Reset modes
You can choose between the following reset modes:
- **Automatic reset**
  If an automatic reset is configured, the output switches on automatically if the speed does not reach the limit value, for example.
- **Monitored reset with rising edge**
  If a monitored reset with rising edge is configured, the output switches on if the speed does not reach the limit value and then a rising edge is detected at S34.
- **Monitored reset with falling edge**
  If a monitored reset with falling edge is configured, the output switches on if the speed does not reach the limit value and then a falling edge is detected at S34.

Switch delay
A delay time can be set for each output (see technical details). The outputs will not switch until the set time has elapsed. It is possible to configure whether the delay time is to be activated when switching on, switching off, or switching on and off.

WARNING!
Potential loss of safety function due to increased reaction time
The output switch-off delay (t_{do}, Off) when overspeed is reached will increase the speed monitor's reaction time by the stated value (see technical details). This must not delay the arrival of a safe condition by more than the permitted time. The configuration of the switch-off delay must be considered in the risk assessment as regards hazards, reaction time and safety distance.

Feedback loops
Feedback loops are used to monitor external contactors or relays. If a relay output is activated, it will not switch on until the corresponding feedback loop is closed.

Start-up delay
To avoid spurious output signals, during the machine's start-up phase, evaluation of the encoder signals can be delayed after the supply voltage is switched on (see technical details).

Switching direction on semiconductor outputs
The semiconductor outputs can be operated in normally de-energised or normally energised mode.

Units
The values to be configured can be entered in various units. Depending on the axis type (linear or rotational axis), various units can be selected for speed and distance (see chapter entitled "Menu overview").

Speed configuration

The speed monitor is configured using the rotary knob on the device.
Up to 16 parameter sets (P0 ... P15), each with a max. of 9 switch functions (F1 ... F9) can be configured to monitor various operating modes, for example.
One of the 16 parameter sets is selected via 4 select inputs SEL1 (Y10), SEL2 (Y11), SEL4 (Y12), SEL8 (Y13).
The switch functions are monitored simultaneously.
Each of a switch function's 16 parameters can be configured as
- Standstill limit
- Speed limit
- Upper or lower limit of speed range
- Right-hand direction monitoring
- Left-hand direction monitoring
- Position monitoring 1 to 4 with width of position window 1 to 4

Exactly one switch function can be assigned to each output. The same switch function can be assigned to several outputs. With range monitoring, a range is assigned to an output (F2-F3, F4-F5, F6-F7 or F8-F9).
A switch delay and reset mode can be configured for each output.
If only one parameter set is used, configure the parameter set P0. Then it is not necessary to connect a select input.

Pilz GmbH & Co. KG, Felix-Wankel-Straße 2, 73760 Ostfildern, Germany
Telephone: +49 711 3409-0, Telefax: +49 711 3409-133, E-Mail: pilz.gmbh@pilz.de

Up to PL e of EN ISO 13849-1
PNOZ s30

INFORMATION
2 basic configurations are available for standard applications, for simple configuration within the display menu. A basic configuration contains limited menu functions adapted for standard applications, with partly pre-defined parameters. Further information about basic configurations can be found in this chapter, under "Basic configuration".

Example configuration:
2 parameter sets for 2 operating modes are configured:
- Set-up: P1
- Automatic mode: P2

The parameter set P2, "Automatic mode", is selected for speed monitoring (selection via the select inputs, see next chapter "Select inputs").
The following switch functions are selected for the parameter set P2:
- F1: Standstill 2 Hz
- F2: Overspeed: 3000 Hz
- F3: Warning threshold: 2800 Hz

The following outputs are assigned to the switch functions:
- F1: Relay output Rel. 1
- F2: Relay output Rel. 2
- F3: Semiconductor output Out 1

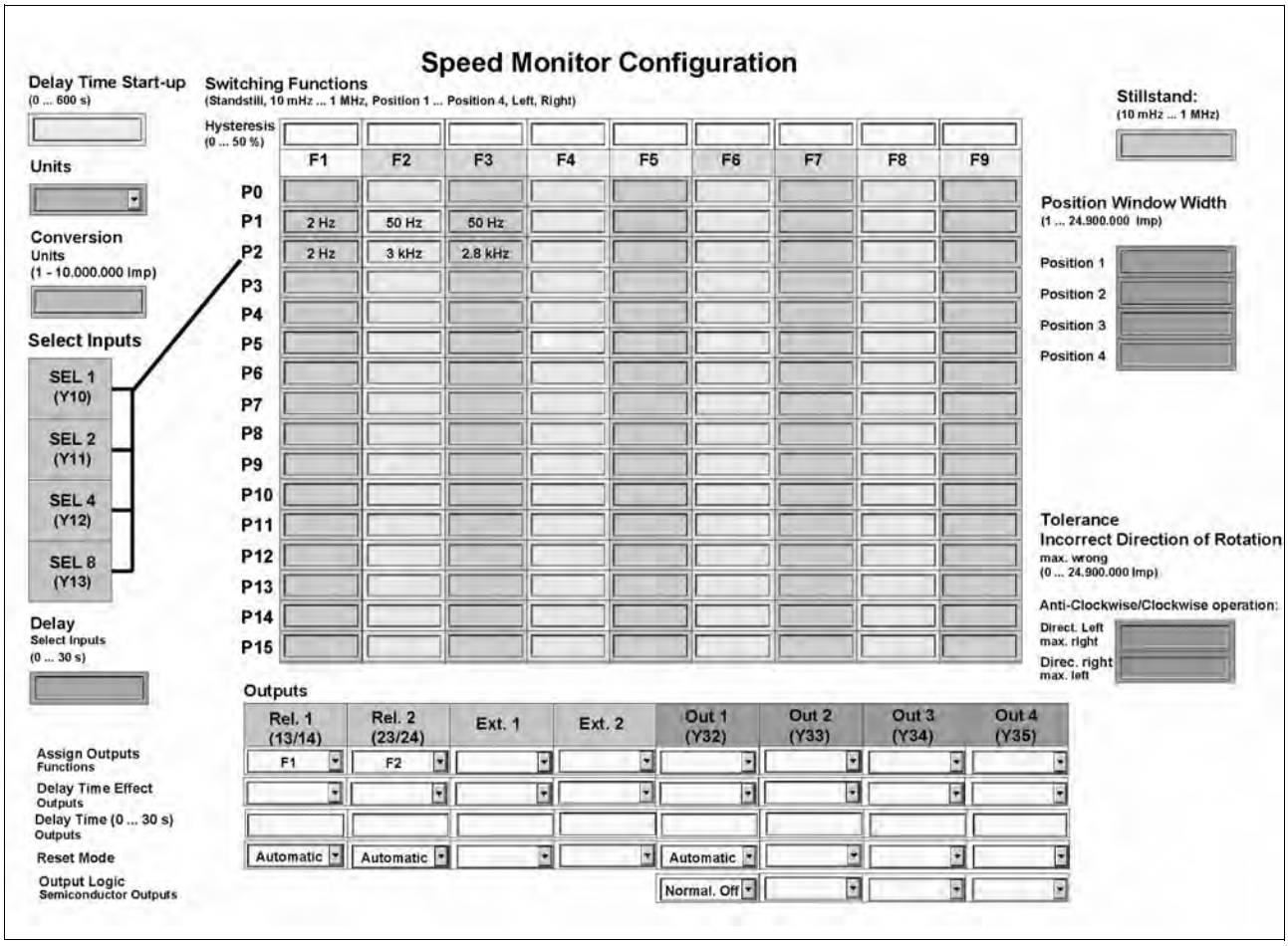

For documentation and a better overview of the device settings, we recommend that you fill in this configuration overview before setting the device parameters (link to form, see "Create configuration overview" chapter).

Up to PL e of EN ISO 13849-1
PNOZ s30

Select inputs

The parameter sets are selected via the 4 select inputs SEL1 (Y10), SEL2 (Y11), SEL4 (Y12), SEL8 (Y13). Only one of the configured parameter sets can be selected.
For applications up to PL e of EN ISO 13849-1 and up to SIL CL 3 of EN IEC 62061 max. 4 parameter sets can be configured: P1, P2, P4 and P8 (or P0 if only 1 parameter set is used).

Parameter set	Signal states of the select inputs			
	SEL 8	SEL 4	SEL 2	SEL 1
P1	0	0	0	1
P2	0	0	1	0
P4	0	1	0	0
P8	1	0	0	0

In all other parameter sets (P0, P3, P5 ... P7, P9 ... P15), the default value "Standstill" must be configured for each switch function.
When using these 4 parameter sets, the following safety features are met:
If there is an error when activating the select inputs, such as

- Short circuits and shorts between contacts
- Open circuit
- Input drift

a parameter set other than P1, P2, P4 or P8 is selected. This means that standstill is monitored.

If necessary, the number of parameter sets can be increased to max. 16. These can only be used for applications up to max. PL d of EN ISO 13849-1 and up to SIL CL 2 of EN IEC 62061.

Parameter set	Signal states of the select inputs			
	SEL 8	SEL 4	SEL 2	SEL 1
P0	0	0	0	0
P1	0	0	0	1
P2	0	0	1	0
P3	0	0	1	1
P4	0	1	0	0
P5	0	1	0	1
P6	0	1	1	0
P7	0	1	1	1
P8	1	0	0	0
P9	1	0	0	1
P10	1	0	1	0
P11	1	0	1	1
P12	1	1	0	0
P13	1	1	0	1
P14	1	1	1	0
P15	1	1	1	1

Pilz GmbH & Co. KG, Felix-Wankel-Straße 2, 73760 Ostfildern, Germany
Telephone: +49 711 3409-0, Telefax: +49 711 3409-133, E-Mail: pilz.gmbh@pilz.de

Up to PL e of EN ISO 13849-1
PNOZ s30

When using the expanded parameter sets, please note:
If an open circuit occurs when the select inputs are activated, the system will switch to a parameter set with a lower number (e.g. P7 -> P3 if an open circuit occurs at SEL4).
The limit values for the switch functions should therefore be entered in ascending order. (Parameter set P0 -> lowest values, parameter set P15 -> highest values).
Delay on the select inputs
A reaction time can be entered for the select inputs. That way it is possible to filter out invalid signals (e.g. contact bounce) that occur when switching.

Switch functions

The following switch functions can be configured:
- **Standstill**
  The standstill frequency is configured centrally. The standstill frequency should be the lowest frequency in the configuration.
  All switch function parameters are pre-configured to the default setting "Standstill" ex works.
- **Speed**
  Limit values can be configured to monitor for overspeed.
  Limit values should be entered in ascending order (Parameter set P0 -> lowest values, parameter set P15 -> highest values)
- **Speed range**
  Up to 4 speed ranges can be monitored simultaneously.
  Configure two switch functions to monitor a range:
  – F2 and F3,
  – F4 and F5,
  – F6 and F7 or
  – F8 and F9.
  The switch function with the lower number (e.g. F2) operates as the lower range limit; the switch function with the higher number (e.g. F3) operates as the upper range limit.
  Both switch functions can be assigned to one or more outputs.
- **Position**
  Up to 4 different position windows can be monitored: Position 1 ... Position 4.
  Each position to be monitored can be entered as often as necessary in parameter sets P0 to P15 and switch functions F1 to F9.
- **Direction**
  The monitoring functions "Direct. Left" and "Direct. Right" can be configured as a switch function as often as necessary.
  For both directions, a tolerance can be entered for the wrong direction.

Basic configuration

Two basic configurations are available for standard applications, for simple configuration within the display menu. A basic configuration contains limited menu functions adapted for standard applications, with partly pre-defined parameters.
The following basic configurations are available:
Basic configuration 1: Ini pnp pnp (proximity switch)
Pre-defined settings and configuration options:
- **Encoder type**
  2 pnp type proximity switches
- **Switch functions**
  – **Standstill (F1)**
    ⇨ Standstill frequency configurable in Hz
  – **Speed (F2)**
    ⇨ Max. frequency (v max) configurable in Hz
- **Parameter set/select input**
  P0, select inputs must be "0" (unconnected)
- **Hysteresis**
  Standstill and speed, 2 % each
- **Output assignment**
  – Standstill: Relay output Rel. 1 and semiconductor output Out 1
  – Speed: Relay output Rel. 2 and semiconductor output Out 2
- **Reset mode**
  – Rel. 1, Rel. 2 Out 1, Out 2: Automatic reset
- **Switch delay**
  None
- **Max. encoder frequency**
  3.5 kHz

Basic configuration 2: Rotary encoder
- **Encoder type**
  Rotary encoder
  ⇨ Rotary encoder type configurable
- **Switch functions**
  – **Standstill (F1)**
    ⇨ Standstill frequency configurable in Hz
  – **Speed (F2)**
    ⇨ Max. frequency (v max) configurable in Hz
  – **Direction (F3)**
    Direction left
    Tolerance for wrong direction = 10 Imp
  – **Direction (F4)**
    Direction right
    Tolerance for wrong direction = 10 Imp
- **Parameter set/select input**
  P0, select inputs must be "0" (unconnected)
- **Hysteresis**
  Standstill and speed, 2 % each
- **Output assignment**
  – Standstill: Relay output Rel. 1 and semiconductor output Out 1
  – Speed: Relay output Rel. 2 and semiconductor output Out 2
  – Direction left: External output Ext. 1 and semiconductor output Out 3
  – Direction right: External output Ext. 2 and semiconductor output Out 4
- **Reset mode**
  – All outputs: Automatic reset
- **Switch delay**
  None
- **Max. encoder frequency**
  1 MHz

For details of how to configure the basic configurations, see the chapter entitled Commissioning/Display Menu - Configuration.

Chip card

The set parameters, the name of the configuration and the passwords are stored on the chip card (see section entitled "Using the chip card").

Up to PL e of EN ISO 13849-1
PNOZ s30

Integrated protection mechanisms

The relay conforms to the following safety criteria:
- The circuit is redundant with built-in self-monitoring.
- The safety function remains effective in the case of a component failure.

Proximity switch

- The following proximity switches can be used:
  – pnp
  – npn
- The proximity switches must be fitted so that at least one is always activated. In other words, the proximity switches must be fitted such that the recorded signals overlap.
- The supply voltage of the proximity switches should be monitored via track S.

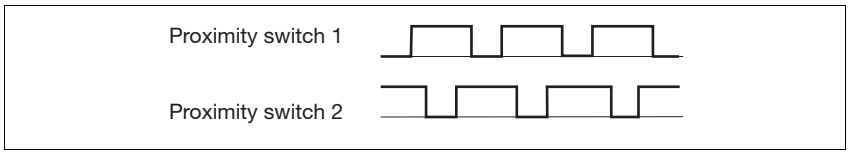

CAUTION!
Appropriate installation measures should be taken to prevent a foreign body coming between the signal encoder and the proximity switch. If not, the foreign body could cause invalid signals.
- Please note the values stated in the technical details
- The maximum frequency of the used encoders must be entered for a complete configuration ("Encoder" Menu -> "Track AB" -> "Track AB fmax" / "Track Z" -> "Track Z fmax").

Pilz GmbH & Co. KG, Felix-Wankel-Straße 2, 73760 Ostfildern, Germany
Telephone: +49 711 3409-0, Telefax: +49 711 3409-133, E-Mail: pilz.gmbh@pilz.de

Up to PL e of EN ISO 13849-1
PNOZ s30

Rotary encoders

- The following rotary encoders can be used:
  - TTL, HTL (single-ended or differential signals)
  - sin/cos 1 Vss
  - Hiperface
- The rotary encoders can be connected with or without Z index (0 index)
- A proximity switch can also be connected to track Z for monitoring broken shearpins
- Track S can be used:
  - To connect an encoder's error output
  - To monitor voltages between 0 V and 30 V for a permitted upper and lower limit. For example, the encoder's supply voltage can be monitored.
- The maximum frequency of the used encoders must be entered for a complete configuration ("Encoder" Menu -> "Track AB" -> "Track AB fmax" / "Track Z" -> "Track Z fmax").

Please note the values stated in the technical details

Adapter for incremental encoders

The adapter records the data between the incremental encoder and the drive and makes it available to the speed monitor via the RJ45 socket.
Pilz supplies complete adapters as well as ready-made cable with RJ45 connector, which can be used when making your own adapter. The range of products in this area is constantly being expanded. Please contact us about the range of adapters that is currently available.

Wiring

Note:
- Information given in the "Technical details" must be followed.
- Use copper wire that can withstand 75 °C.
- The cable used to connect the rotary encoder and proximity switch must be shielded (see connection diagrams in this chapter).
- If possible, the connections for the various earth potentials (GND, S21, Y30 and A2) should not be connected, as noise susceptibility can be increased significantly as a result.

Pin assignment of the RJ45 female connector

RJ45 socket 8-pin	PIN	Track
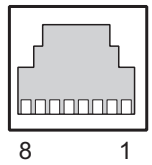	1	S
	2	GND
	3	Z
	4	A
	5	/A
	6	/Z
	7	B
	8	/B

Supply voltage

Supply voltage	AC	DC
	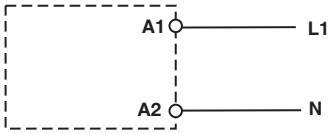	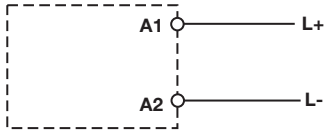

Up to PL e of EN ISO 13849-1
PNOZ s30

Connection of proximity switches

The following proximity switch combinations can be connected:
- A: pnp, B: pnp
- A: npn, B: npn
- A: pnp, B: npn
- A: npn, B: pnp

When connecting proximity switches please note:
- Proximity switches can either be connected to terminals In1, In2 and GND or to tracks A and B plus GND on the RJ45 socket.
- Track S should be used to monitor the supply voltage (see drawing). A permitted voltage range can be entered in the menu.
- Connect the proximity switch to 24 VDC of the power supply.

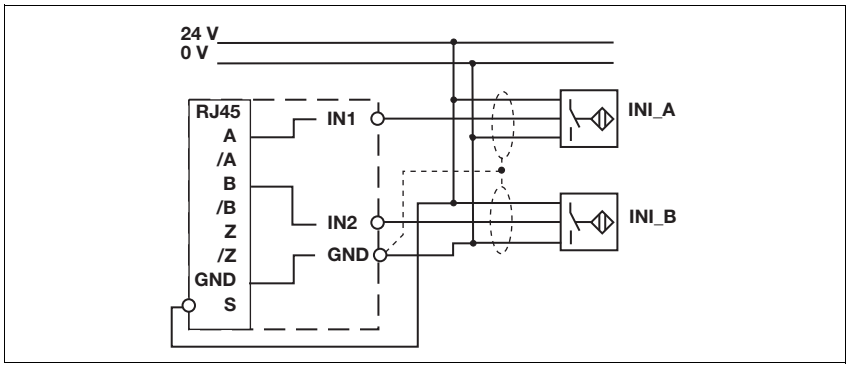

Connection of a rotary encoder

Proceed as follows when connecting the rotary encoder:
- The rotary encoder be connected via an adapter (e.g. PNOZ msi6p) or can be connected directly to the speed monitor.
- Use only shielded cables for all connections
- Always connect GND on the rotary encoder to GND on the RJ45 connector.

Connect rotary encoder to speed monitor

Encoder types:
- TTL single ended
- HTL single ended

Please note:
- Tracks /A and /B must remain free

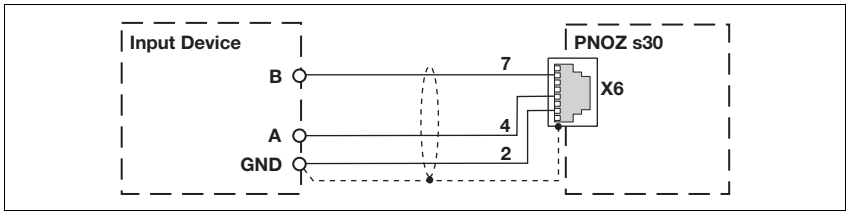

Pilz GmbH & Co. KG, Felix-Wankel-Straße 2, 73760 Ostfildern, Germany
Telephone: +49 711 3409-0, Telefax: +49 711 3409-133, E-Mail: pilz.gmbh@pilz.de

Up to PL e of EN ISO 13849-1
PNOZ s30

Encoder types:
- TTL differential
- HTL differential
- sin/cos 1 Vss
- Hiperface

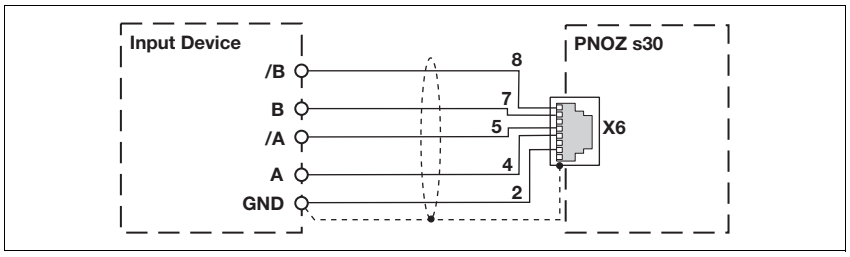

Connect rotary encoder with Z index to speed monitor

Encoder types:
- TTL single Z Index
- HTL single Z Index

Please note:
- Tracks /A, /B and /Z must remain free

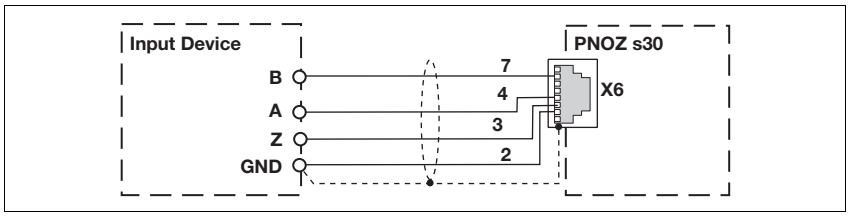

Encoder types:
- TTL diff. Z Index
- HTL diff. Z Index
- sin/cos 1 Vss Z Index

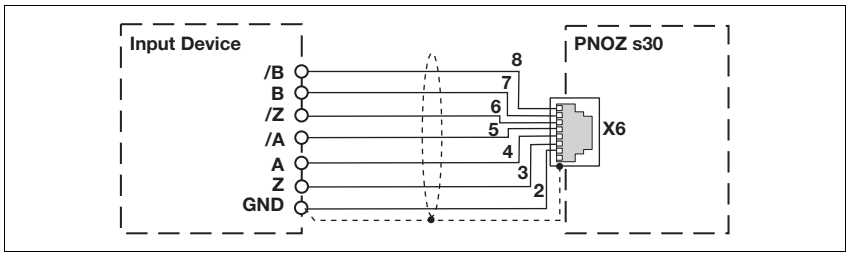

Up to PL e of EN ISO 13849-1
PNOZ s30

Connect rotary encoder to the speed monitor via an adapter

The adapter (e.g. PNOZ msi6p) is connected between the rotary encoder and the drive. The output on the adapter is connected to the RJ45 socket on the speed monitor.

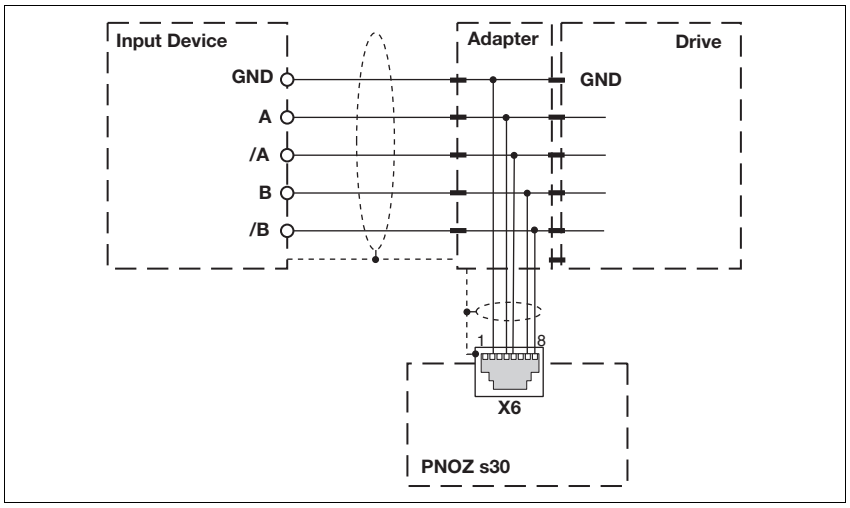

Connection of proximity switch and rotary encoder

Encoder types:
- TTL single Z Freq. Ini pnp
- HTL single Z Freq. Ini pnp

Please note:
Tracks /A, /B and /Z must remain free.

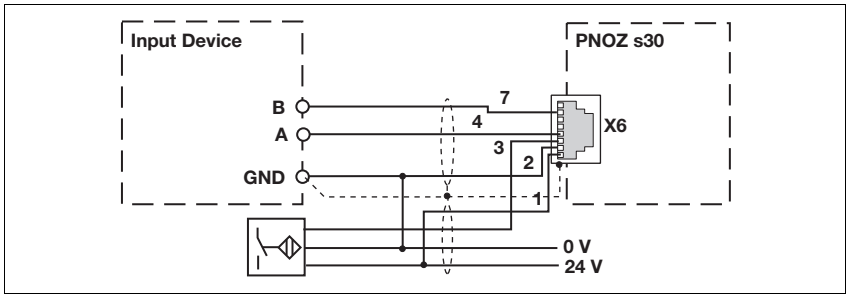

Pilz GmbH & Co. KG, Felix-Wankel-Straße 2, 73760 Ostfildern, Germany
Telephone: +49 711 3409-0, Telefax: +49 711 3409-133, E-Mail: pilz.gmbh@pilz.de

Up to PL e of EN ISO 13849-1
PNOZ s30

Encoder types:
- TTL differential Z Freq. Ini pnp
- HTL differential Z Freq. Ini pnp
- sin/cos 1 Vss Z Freq. Ini pnp
- Hiperface Z Freq. Ini pnp

Please note:
Track /Z must remain free!!

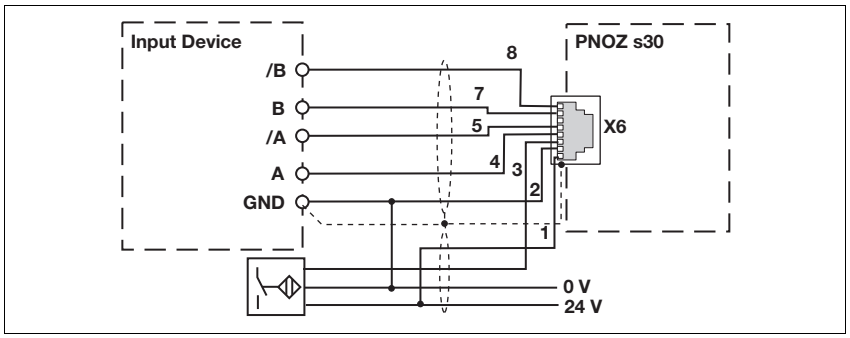

Reset circuit

Automatic reset	Monitored reset
Automatic reset must only be configured No wiring necessary!	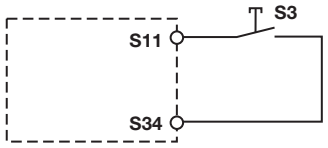

Feedback circuit

Link	Contacts from external contactors
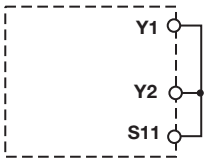	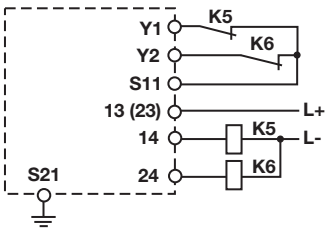

Select inputs

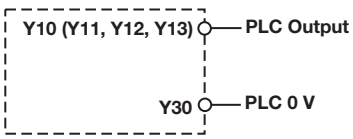

Pilz GmbH & Co. KG, Felix-Wankel-Straße 2, 73760 Ostfildern, Germany
Telephone: +49 711 3409-0, Telefax: +49 711 3409-133, E-Mail: pilz.gmbh@pilz.de

Up to PL e of EN ISO 13849-1
PNOZ s30

Semiconductor outputs

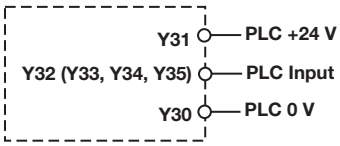

Terminal configuration

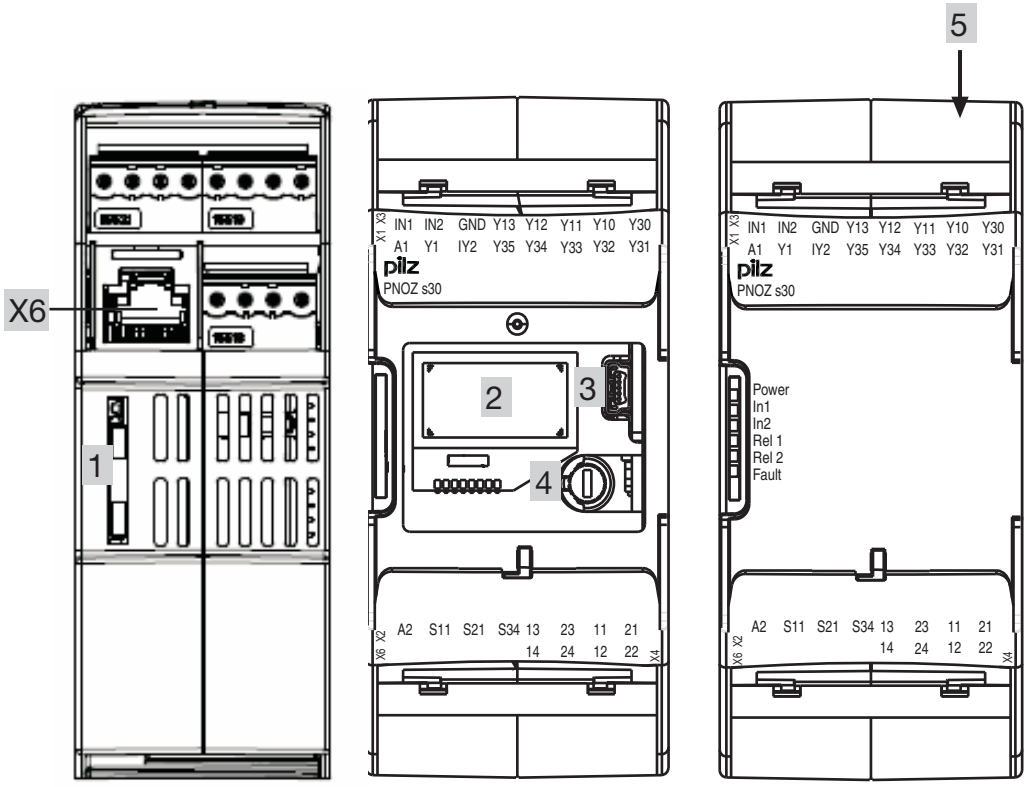

Pilz GmbH & Co. KG, Felix-Wankel-Straße 2, 73760 Ostfildern, Germany
Telephone: +49 711 3409-0, Telefax: +49 711 3409-133, E-Mail: pilz.gmbh@pilz.de

Up to PL e of EN ISO 13849-1
PNOZ s30

Installation

Install base unit without contact expander module:
- Ensure that the plug terminator is inserted at the side of the unit.

Connect base unit and PNOZsigma contact expander module:
- Remove the plug terminator at the side of the base unit and at the contact expander module.
- Connect the base unit and the contact expander module to the supplied connector before mounting the units to the DIN rail.

Control cabinet installation
- The unit should be installed in a control cabinet with a protection type of at least IP54.
- It is preferable to install the device on a horizontal DIN rail in order to ensure the best possible convection.
- Use the locking element on the rear of the device to attach it to the DIN rail.
- Push the device upwards or downwards before lifting it from the DIN rail.

Dimensions

*with spring-loaded terminals

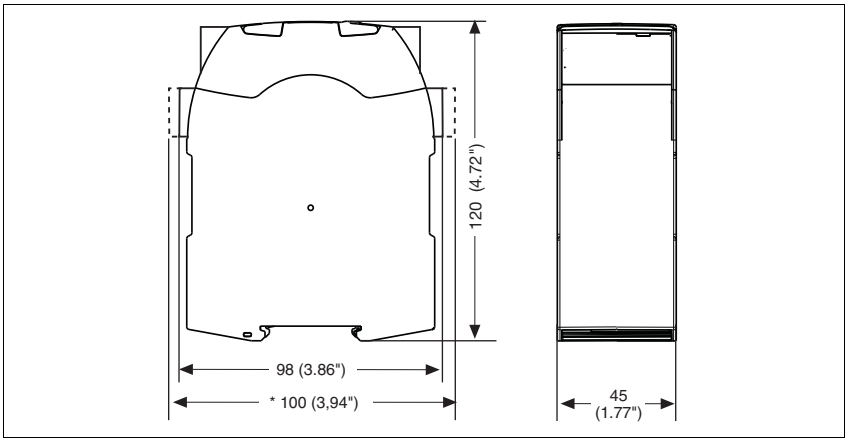

Up to PL e of EN ISO 13849-1
PNOZ s30

Notice

This data sheet is only intended for use during configuration. Please refer to the operating manual for installation and operation.

Service life graph

The service life graphs indicate the number of cycles from which failures due to wear must be expected. The wear is mainly caused by the electrical load; the mechanical load is negligible.

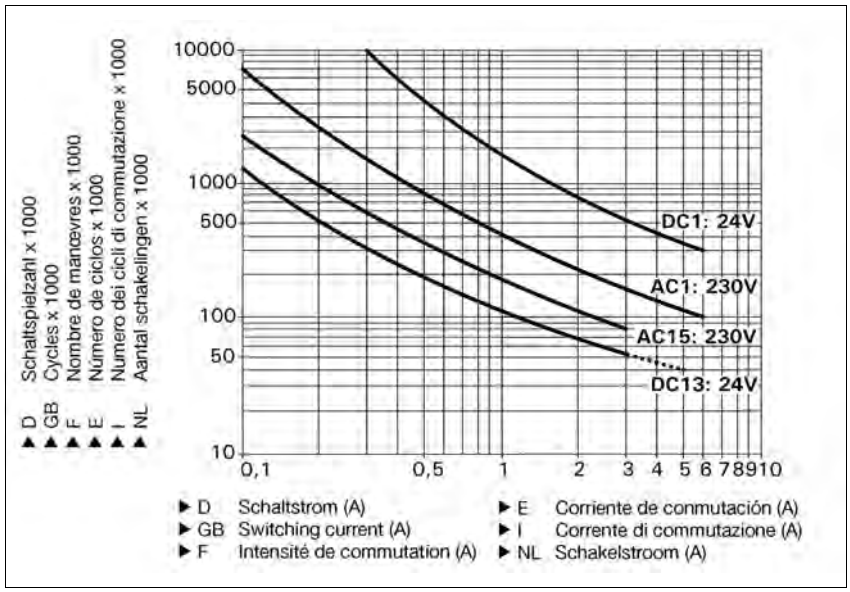

Example
- Inductive load: 0,2 A
- Utilisation category: AC15
- Contact service life: 1,000,000 cycles

Provided the application requires fewer than 1,000,000 cycles, the PFH value (see technical details) can be used in the calculation.

To increase the service life, sufficient spark suppression must be provided on all output contacts. With capacitive loads, any power surges that occur must be noted. With contactors, use freewheel diodes for spark suppression.

Technical details

Electrical data	
Supply voltage	
Supply voltage U_B AC/DC	**24 - 240 V**
Voltage tolerance	**-15 %/+10 %**
Power consumption at U_B AC	**9.0 VA**
Power consumption at U_B DC	**5.5 W**
Frequency range AC	**50 - 60 Hz**
Residual ripple DC	**160 %**
Continuous duty	**100 %**
Voltage and current at	
Reset circuit DC: **24.0 V**	**5.0 mA**
Feedback loop DC: **24.0 V**	**5.0 mA**

Pilz GmbH & Co. KG, Felix-Wankel-Straße 2, 73760 Ostfildern, Germany
Telephone: +49 711 3409-0, Telefax: +49 711 3409-133, E-Mail: pilz.gmbh@pilz.de

Up to PL e of EN ISO 13849-1
PNOZ s30

Electrical data	
Max. inrush current impulse	
	0.06 A
Feedback loop	**0.06 A**
Min. unit fuse protection	**1.00 A**
Max. unit fuse protection F1	**Max. cable cross section**
Proximity switch input	
Number of inputs	**2**
Input signal level	
Signal level at "1"	**11 - 30 V**
Signal level at "0"	**-3 - 5 V**
Input resistance	**22 kOhm**
Input's frequency range	**0 - 1,000 kHz**
Configurable monitoring frequency	
without hysteresis	**10 mHz - 1,000 kHz**
Input for incremental encoder/proximity switch (RJ45 connector)	
Number of inputs	**1**
Input signal level	**0.5 - 30.0 Vss**
Phase position for the differential signals A,/A and B,/B	**90° ±30°**
Overload protection	**-50 - 65 V**
Input resistance	**20.0 kOhm**
Input's frequency range	**0 - 1,000 kHz**
Configurable monitoring frequency	
without hysteresis	**10 mHz - 1,000 kHz**
Connection type (incremental encoder)	**RJ45 socket, 8-pin**
Select inputs	
Number of inputs	**4**
Input signal level	
Signal level at "1"	**15 - 30 V**
Signal level at "0"	**-3 - 5 V**
Input current	**5 mA**
Semiconductor outputs	
Number	**4**
Semiconductor outputs (short circuit proof)	**24.0 V** DC,**50 mA**
External supply voltage	**24.0 V** DC
Voltage tolerance	**-20% / +20%**
Relay outputs	
Number of output contacts	
Safety contacts (S) instantaneous:	**2**
Auxiliary contacts (N/C):	**2**
Utilisation category in accordance with **EN 60947-4-1**	
Safety contacts: AC1 at **240 V**	I_{min}: **0.01 A** , I_{max}: **4.0 A** P_{max}: **1000 VA**
Safety contacts: DC1 at **24 V**	I_{min}: **0.01 A** , I_{max}: **4.0 A** P_{max}: **100 W**
Auxiliary contacts: AC1 at **240 V**	I_{min}: **0.01 A** , I_{max}: **4.0 A** P_{max}: **1000 VA**
Auxiliary contacts: DC1 at **24 V**	I_{min}: **0.01 A** , I_{max}: **4.0 A** P_{max}: **100 W**
Utilisation category in accordance with **EN 60947-5-1**	
Safety contacts: AC15 at **230 V**	I_{max}: **3.0 A**
Safety contacts: DC13 at **24 V** (6 cycles/min)	I_{max}: **4.0 A**
Auxiliary contacts: AC15 at **230 V**	I_{max}: **3.0 A**
Auxiliary contacts: DC13 at **24 V** (6 cycles/min)	I_{max}: **4.0 A**
Conventional thermal current	**4.0 A**
Contact material	**AgCuNi + 0.2 µm Au**

Up to PL e of EN ISO 13849-1
PNOZ s30

Relay outputs	
External contact fuse protection (I_K = 1 kA) to **EN 60947-5-1**	
Blow-out fuse, quick	
Safety contacts:	**6 A**
Auxiliary contacts:	**6 A**
Blow-out fuse, slow	
Safety contacts:	**4 A**
Auxiliary contacts:	**4 A**
Circuit breaker 24 VAC/DC, characteristic B/C	
Safety contacts:	**4 A**
Auxiliary contacts:	**4 A**
Times	
Switch-on delay	
with automatic reset typ.	**15 ms**
with automatic reset max.	**50 ms**
with automatic reset after power on typ.	**3,920 ms**
with automatic reset after power on max.	**4 s**
with manual reset typ.	**40 ms**
with manual reset max.	**100 ms**
Delay-on de-energisation	
with power failure typ. U_B AC/DC: **24 V**	**25 ms**
with power failure max. U_B AC/DC: **24 V**	**50 ms**
with power failure typ. U_B AC : **240 V**	**100 ms**
with power failure max. U_B AC : **240 V**	**150 ms**
after the safety function is triggered, typ.	**8 ms**
after the safety function is triggered, max.	**15 ms**
Recovery time at max. switching frequency 1/s	
after power failure	**4 s**
after the safety function is triggered	**1 s**
Reaction time after limit value is exceeded	**1/f**
Waiting period with a monitored reset	
with rising edge	**30 ms**
with falling edge	**30 ms**
Min. start pulse duration with a monitored reset	
with rising edge	**30 ms**
with falling edge	**30 ms**
Supply interruption before de-energisation	**20 ms**
Switch delay (selectable)	**0 - 30 s**
Delay on the select inputs (selectable)	**0 - 30 s**
Start-up delay (selectable)	**0 - 600 s**
Environmental data	
EMC	**EN 60947-5-1**, **EN 61000-6-2**, **EN 61000-6-3**
Vibration to **EN 60068-2-6**	
Frequency	**10 - 55 Hz**
Amplitude	**0.35 mm**
Climatic suitability	**EN 60068-2-78**
Airgap creepage in accordance with **EN 60947-1**	
Pollution degree	**2**
Overvoltage category	**II**
Rated insulation voltage	**250 V**
Rated impulse withstand voltage	**4.00 kV**
Ambient temperature	**-20 - 55 °C**
Storage temperature	**-40 - 85 °C**
Protection type	
Mounting (e.g. cabinet)	**IP54**
Housing	**IP30**
Terminals	**IP20**

Pilz GmbH & Co. KG, Felix-Wankel-Straße 2, 73760 Ostfildern, Germany
Telephone: +49 711 3409-0, Telefax: +49 711 3409-133, E-Mail: pilz.gmbh@pilz.de

Up to PL e of EN ISO 13849-1
PNOZ s30

Mechanical data	
Housing material	
Housing	**PC**
Front	**PC**
Cross section of external conductors with screw terminals	
1 core flexible	**0.25 - 2.50 mm² , 24 - 12 AWG** No. 750330
2 core, same cross section, flexible:	
with crimp connectors, without insulating sleeve	**0.25 - 1.00 mm² , 24 - 16 AWG** No. 750330
without crimp connectors or with TWIN crimp connectors	**0.20 - 1.50 mm² , 24 - 16 AWG** No. 750330
Torque setting with screw terminals	**0.50 Nm** No. 750330
Connection type	**spring-loaded terminal** No. 751330 **screw terminal** No. 750330
Spring-loaded terminals: Terminal points per connection	**2** No. 751330
Stripping length	**9 mm** No. 751330
Dimensions	
Height	**100.0 mm** No. 751330 **98.0 mm** No. 750330
Width	**45.0 mm**
Depth	**120.0 mm**
Weight	**410 g** No. 751330 **427 g** No. 750330

No. stands for order number.

Safety characteristic data

Unit	Operating mode	EN ISO 13849-1: 2006 PL	EN 954-1 Category	EN IEC 62061 SIL CL	PFH [1/h]	EN ISO 13849-1: 2006 T_M [year]
PNOZ s30	Monitoring 1 input device	**PL d** (**Cat. 2**)	**Cat. 2**	**SIL CL 2**	**3.28E-08**	**20**
PNOZ s30	Monitoring 2 input devices	**PL e** (**Cat. 3**)	**Cat. 3**	**SIL CL 3**	**1.50E-08**	**20**

All the units used within a safety function must be considered when calculating the safety characteristic data.

INFORMATION
A safety function's SIL/PL values are **not** identical to the SIL/PL values of the units that are used and may be different. We recommend that you use the PAScal software tool to calculate the safety function's SIL/PL values.

The standards current on **2009-06** apply.

Up to PL e of EN ISO 13849-1
PNOZ s30

Categories

Safety level

The maximum achievable safety level depends on the encoder, the wiring and the operating mode of the PNOZ s30.

INFORMATION

The safety-related characteristic data of the PNOZ s30 and all other devices that are used must be taken into account when calculating the safety level. We recommend that you use the PAScal software tool to calculate the safety function's SIL/PL values.

The safety assessments below only consider the sensor subsystems and PNOZ s30. The actuator subsystem depends on the application and must also be considered in the overall assessment.

Forced dynamisation:

Within an 8-hour period, the monitored sensors must be moved so that the signal changes on all the connected tracks.

Unless stated otherwise, the safety-related characteristic data applies when using the following monitoring functions:

- Standstill
- Overspeed
- Direction of rotation

Key:

SRP/CS = Safety-related part of a control system (EN 13849-1, Tab. 2)

2.3

Standard rotary encoder

Max. achievable safety-related characteristic data

- In accordance with EN ISO 13849-1: 2006: PL c (Cat. 1)
- In accordance with EN IEC 62061: -

Permitted encoder types:

- Standard rotary encoder
  - sin/cos 1 Vss differential
  - TTL single ended / differential
  - HTL single ended / differential

Safety-related architecture

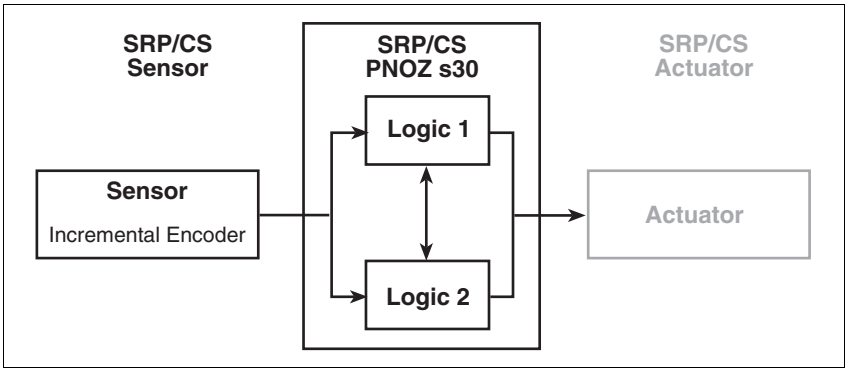

To calculate the safety function you will need the following data for the "sensor" subsystem and "PNOZ s30" subsystem:

Sensor subsystem		Subsystem PNOZ s30	
MTTF	**DC**	**Operating mode**	**PFH [1/h]**
MTTF (100 % dangerous failures)	0 %	Monitoring 1 encoder	3,28E-08

Recommended values for the sensor, depending on the PL and SIL CL values:

MTTF (year)	PL in accordance with EN ISO 13849-1: 2006	SIL CL in accordance with EN IEC 62061
>100	PL c (Cat. 1)	-

The characteristic data only applies if the rotary encoders are assessed as "well-tried".

Pilz GmbH & Co. KG, Felix-Wankel-Straße 2, 73760 Ostfildern, Germany
Telephone: +49 711 3409-0, Telefax: +49 711 3409-133, E-Mail: pilz.gmbh@pilz.de

Up to PL e of EN ISO 13849-1
PNOZ s30

Standard rotary encoder with additional diagnostics through the drive controller

Max. achievable safety-related characteristic data
- In accordance with EN ISO 13849-1: 2006: PL d (Cat 2.)
- In accordance with EN IEC 62061: SIL CL 2

Permitted encoder type:
- Standard rotary encoder
  - sin/cos 1 Vss differential

Safety-related architecture

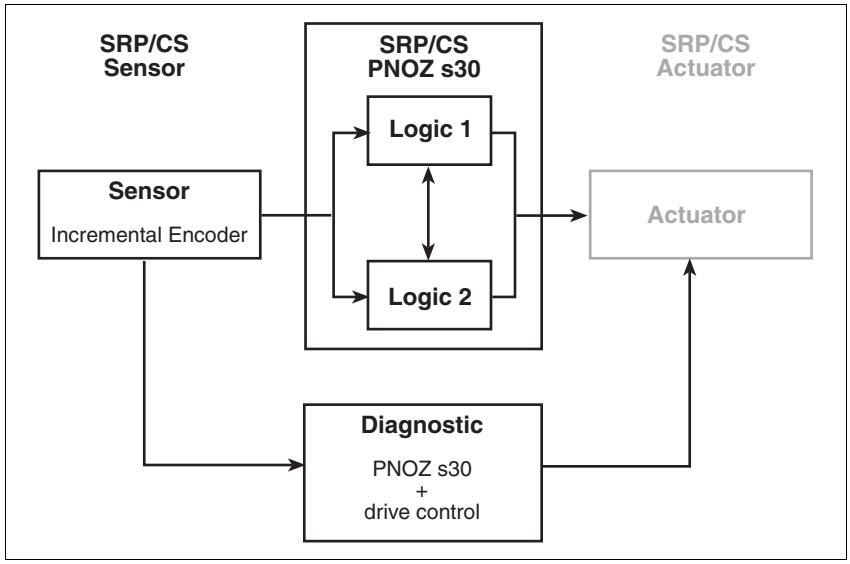

To calculate the safety function you will need the following data for the "sensor" subsystem and "PNOZ s30" subsystem:

Sensor subsystem		Subsystem PNOZ s30	
MTTF	**DC**	**Operating mode**	**PFH [1/h]**
MTTF (100% dangerous failures)	60 %	Monitoring 1 encoder	3,28E-08

Recommended MTTF values, depending on the PL and SIL CL values:

MTTF (year)	PL in accordance with EN ISO 13849-1: 2006	SIL CL in accordance with EN IEC 62061
>100	PL d (Cat. 2)	SIL CL 2
>75	PL c (Cat. 2)	
>30		SIL CL 1

Up to PL e of EN ISO 13849-1
PNOZ s30

The drive controller must meet the following requirements:
- Parameters for the control loops and motor control must be set in such a way as to guarantee stabile operation.
  Drag error detection (see below) must be capable of operating in accordance with the requirements of the safety function.
  The motor must be operated with a current impressing control procedure, based on the rotor position (field-oriented control).
- The drive controller must be in position control operating mode.
- If a maximum error variable is exceeded (set/true comparison) the drive controller must switch to a fault condition and stop the drive (drag error detection). The error reaction to drag error detection should be a controlled motor stop.
- Fault detection via the error variable with subsequent shutdown must meet the requirements of the safety function, with regard to reaction times for example.
- The drive controller must evaluate the same incremental/sincos signals from the encoder for control as are processed by the safe evaluation device (important on encoders with combined analogue/digital interface).

Safe rotary encoder

Max. achievable safety-related characteristic data
- In accordance with EN ISO 13849-1: 2006: PL d (Cat 2.)
- In accordance with EN IEC 62061: SIL CL 2

Permitted encoder type:
- Safe incremental encoder
  – sin/cos 1 Vss differential

Safe encoders are certified in accordance with EN 61508, EN 13849 and EN 62061. Certain external errors must be detected in order to implement the safety function. The encoder and evaluation device must be compatible.

Safety-related architecture

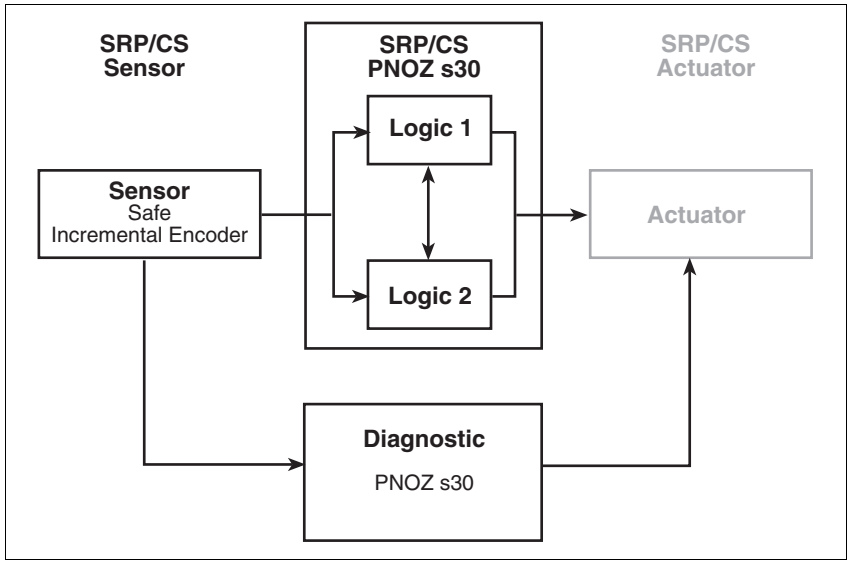

To calculate the safety function you will need the following data for the "sensor" subsystem and "PNOZ s30" subsystem:

Sensor subsystem			Subsystem PNOZ s30		
EN ISO 13849-1 PL	PFH [1/h]	DC	Operating mode	EN ISO 13849-1 PL	PFH [1/h]
See manufacturer		90 %	Monitoring 1 encoder	PL d (Cat. 2)	3,28E-08

Pilz GmbH & Co. KG, Felix-Wankel-Straße 2, 73760 Ostfildern, Germany
Telephone: +49 711 3409-0, Telefax: +49 711 3409-133, E-Mail: pilz.gmbh@pilz.de

Up to PL e of EN ISO 13849-1
PNOZ s30

Standard rotary encoder and proximity switch

Max. achievable safety-related characteristic data
- In accordance with EN ISO 13849-1: 2006: PL e (Cat. 3)
- In accordance with EN IEC 62061: SIL CL 3

Permitted encoder types:
- Standard rotary encoder + proximity switch
  - sin/cos 1 Vss + pnp
  - TTL + pnp
  - HTL + pnp

Safety-related architecture

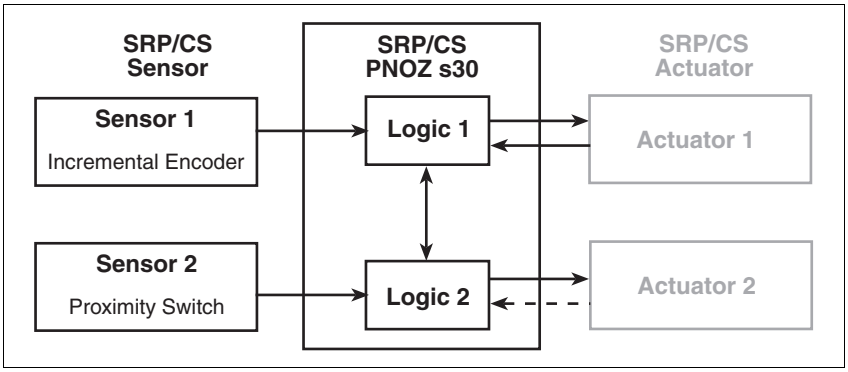

To calculate the safety function you will need the following data for the "sensor" subsystem and "PNOZ s30" subsystem:

Sensor subsystem		Subsystem PNOZ s30	
MTTF	**DC**	**Operating mode**	**PFH [1/h]**
MTTF (100 % dangerous failures)	90 %	Monitoring 2 encoders	1,50E-08

Recommended MTTF values, depending on the PL and SIL CL values:

MTTF (year)	PL in accordance with EN ISO 13849-1: 2006	SIL CL in accordance with EN IEC 62061
>100	PL e (Cat. 3)	SIL CL 3
>62	PL d (Cat. 3)	SIL CL 2

The characteristic data only applies for the following monitoring functions:
- Standstill
- Overspeed

Up to PL e of EN ISO 13849-1
PNOZ s30

2 proximity switches

Max. achievable safety-related characteristic data
- In accordance with EN ISO 13849-1: 2006: PL e (Cat. 3)
- In accordance with EN IEC 62061: SIL CL 3

Permitted encoder types:
- Proximity switches
  - npn + npn
  - npn + pnp
  - pnp + npn
  - pnp + pnp

Safety-related architecture

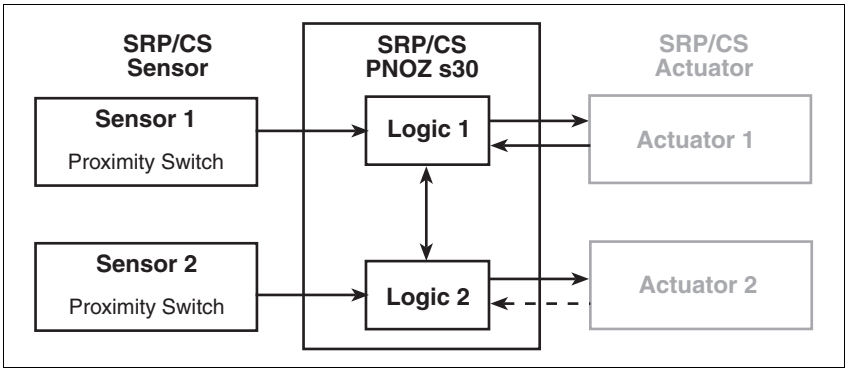

2.3

To calculate the safety function you will need the following data for the "sensor" subsystem and "PNOZ s30" subsystem:

Sensor subsystem		Subsystem PNOZ s30	
MTTF	**DC**	**Operating mode**	**PFH [1/h]**
MTTF (100 % dangerous failures)	90 %	Monitoring 2 encoders	1,50E-08

Recommended MTTF values, depending on the PL and SIL CL values:

MTTF (year)	PL in accordance with EN ISO 13849-1: 2006	SIL CL in accordance with EN IEC 62061
>100	PL e (Cat. 3)	SIL CL 3
>62	PL d (Cat. 3)	SIL CL 2

The characteristic data only applies
- When using the monitoring functions
  - Standstill
  - Overspeed
- When measures are taken against common cause failures:
  - Use of different technology/design or physical principles of sensors 1 and 2, e.g. different manufacturers
  - Evaluation of the encoder supply via track S

If these conditions are not fulfilled, the requirements for Categories 2…4 in accordance with EN ISO 13849-1 are not met.

According to the standard, proximity switches are not well-tried components (necessary for Category 1), so classification to Category B / PL b is all that's possible in this case.

Pilz GmbH & Co. KG, Felix-Wankel-Straße 2, 73760 Ostfildern, Germany
Telephone: +49 711 3409-0, Telefax: +49 711 3409-133, E-Mail: pilz.gmbh@pilz.de

Up to PL e of EN ISO 13849-1
PNOZ s30

Safe rotary encoder with Z index

Max. achievable safety-related characteristic data
- In accordance with EN ISO 13849-1: 2006: PL e (Cat. 3)
- In accordance with EN IEC 62061: SIL CL 3

Permitted encoder type:
- Safe incremental encoder
  - sin/cos 1 Vss differential

Safe encoders are certified in accordance with EN 61508, EN 13849 and EN 62061. Certain external errors must be detected in order to implement the safety function. The encoder and evaluation device must be compatible.

Safety-related architecture

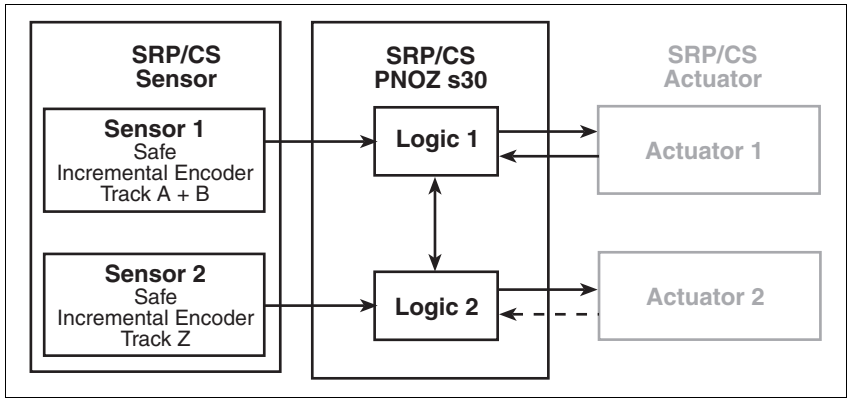

To calculate the safety function you will need the following data for the "sensor" subsystem and "PNOZ s30" subsystem:

Sensor subsystem			Subsystem PNOZ s30		
EN ISO 13849-1 PL	**PFH [1/h]**	**DC**	**Operating mode**	**EN ISO 13849-1 PL**	**PFH [1/h]**
See manufacturer		99 %	Monitoring 2 encoders	PL e (Cat. 3)	1,50E-08

Up to PL e of EN ISO 13849-1
PNOZ s30

Order reference

Type	Features	Terminals	Order no.
PNOZ s30	24 - 240 VAC/DC	With screw terminals	750 330
PNOZ s30 C	24 - 240 VAC/DC	With spring-loaded terminals	751 330

Order reference: Accessories

Type	Features			Order no.
PNOZ s terminator plug	Terminator		10 pieces	750 010
PNOZmulti Chipcard	Chip card	8 kB		779 201
PNOZmulti Chipcard Set	Chip card	8 kB	10 pieces	779 200
PNOZmulti Chipcard	Chip card	32 kB		779 211
PNOZmulti Chipcard Set	Chip card	32 kB	10 pieces	779 212
Chipcard Holder	Chip card holder			779 240
PNOZmulti Seal	Chip card seal		10 pieces	779 250
PNOZ s Set3 Screw Loaded Terminals	Set of plug-in screw terminals		1 piece	750 014
PNOZ s Set3 Spring Loaded Terminals	Set of plug-in spring-loaded terminals		1 piece	751 014

Pilz GmbH & Co. KG, Felix-Wankel-Straße 2, 73760 Ostfildern, Germany
Telephone: +49 711 3409-0, Telefax: +49 711 3409-133, E-Mail: pilz.gmbh@pilz.de

Pilz GmbH & Co. KG, Felix-Wankel-Straße 2, 73760 Ostfildern, Germany
Telephone: +49 711 3409-0, Telefax: +49 711 3409-133, E-Mail: pilz.gmbh@pilz.de

Contents		Page
Order reference		
Relays for electrical safety		
	Alphabetically by type	3.1-2
	Numerically by order number	3.1-4
Relays for functional safety		
	Alphabetically by type	3.1-6
	Numerically by order number	3.1-10

Relays for electrical safety
Alphabetically by type

Type	U_B	U_M	I_M	R_{an}	Order no.	Page
PMD s10	24 - 240 VAC/DC				760 100	1.1-2
PMD s10 C	24 - 240 VAC/DC				761 100	1.1-2
PMD s20	24 - 240 V AC/DC				760 120	1.1-11
PMD s20 C	24 - 240 V AC/DC				761 120	1.1-11
S1EN	24 - 240 VAC/DC			50 KΩ	884 100	1.2-25
S1EN	24 - 240 VAC/DC			200 KΩ	884 110	1.2-25
S1IM	24 VAC		15 A		828 020	1.2-21
S1IM	42 - 48 VAC		15 A		828 030	1.2-21
S1IM	110 - 130 V AC		15 A		828 040	1.2-21
S1IM	230 - 240 VAC		15 A		828 050	1.2-21
S1IM UP	24 VDC		15 A		828 035	1.2-21
S1M0	24 VAC/DC				839 600	1.2-42
S1M0	48 VAC				839 620	1.2-42
S1M0	110 VAC				839 630	1.2-42
S1M0	230 VAC				839 650	1.2-42
S1M0	240 VAC				839 655	1.2-42
S1M0	400 VAC				839 660	1.2-42
S1MN	24 VAC/DC				839 400	1.2-37
S1MN	48 VAC				839 405	1.2-37
S1MN	110 VAC				839 410	1.2-37
S1MN	230 VAC				839 415	1.2-37
S1MN	240 VAC				839 420	1.2-37
S1MN	400 VAC				839 425	1.2-37
S1MS	24 VAC/DC				839 775	1.2-32
S1MS	48 VAC				839 725	1.2-32
S1MS	110 VAC				839 740	1.2-32
S1MS	230 VAC				839 760	1.2-32
S1MS	240 VAC				839 765	1.2-32
S1MS	400 VAC				839 770	1.2-32
S1PN	200 - 240 V				890 200	1.2-11
S1PN	400 - 500 V				890 210	1.2-11
S1PN	550 - 690 V				890 220	1.2-11
S1SW P	24 - 240 VAC/DC	690 VAC/DC			407 710	1.2-47
S1UM	24 VAC	500 VAC/DC			827 230	1.2-2
S1UM	42 - 48 VAC	500 VAC/DC			827 240	1.2-2
S1UM	110 - 130 VAC	500 VAC/DC			827 250	1.2-2
S1UM	230 - 240 VAC	500 VAC/DC			827 260	1.2-2
S1UM UP	24 VDC	500 VAC/DC			827 225	1.2-2
S1UM UP	24 VAC	500 VAC/DC			827 235	1.2-2
S1UM UP	42 - 48 VAC	500 VAC/DC			827 245	1.2-2
S1UM UP	110 - 130 VAC	500 VAC/DC			827 255	1.2-2
S1UM UP	230 - 240 VAC	500 VAC/DC			827 265	1.2-2

Pilz GmbH & Co. KG, Felix-Wankel-Straße 2, 73760 Ostfildern, Germany
Telephone: +49 711 3409-0, Telefax: +49 711 3409-133, E-Mail: pilz.gmbh@pilz.de

Relays for electrical safety
Alphabetically by type

Type	U_B	U_M	I_M	R_{an}	Order no.	Page
S1WP	24 VDC	0 - 120 VAC/DC	9 A		890 000	1.2-14
S1WP	24 VDC	0 - 240 VAC/DC	9 A		890 010	1.2-14
S1WP	24 VDC	0 - 415 VAC/DC	9 A		890 020	1.2-14
S1WP	24 VDC	0 - 550 VAC/DC	9 A		890 030	1.2-14
S1WP	230 VAC/DC	0 - 120 VAC/DC	9 A		890 040	1.2-14
S1WP	230 VAC/DC	0 - 240 VAC/DC	9 A		890 050	1.2-14
S1WP	230 VAC/DC	0 - 415 VAC/DC	9 A		890 060	1.2-14
S1WP	230 VAC/DC	0 - 550 VAC/DC	9 A		890 070	1.2-14
S1WP	24 VDC	0 - 120 VAC/DC	18 A		890 100	1.2-14
S1WP	24 VDC	0 -240 VAC/DC	18 A		890 110	1.2-14
S1WP	24 VDC	0 - 415 VAC/DC	18 A		890 120	1.2-14
S1WP	24 VDC	0 - 550 VAC/DC	18 A		890 130	1.2-14
S1WP	230 VAC/DC	0 - 120 VAC/DC	18 A		890 140	1.2-14
S1WP	230 VAC/DC	0 - 240 VAC/DC	18 A		890 150	1.2-14
S1WP	230 VAC/DC	0 - 415 VAC/DC	18 A		890 160	1.2-14
S1WP	230 VAC/DC	0 - 550 VAC/DC	18 A		890 170	1.2-14
S3UM	24 VDC	42 VAC			837 240	1.2-6
S3UM	24 VDC	100/110 VAC			837 250	1.2-6
S3UM	24 VDC	100/110 VAC			837 251	1.2-6
S3UM	24 VDC	230 VAC			837 260	1.2-6
S3UM	24 VDC	400/440 VAC			837 270	1.2-6
S3UM	24 VDC	400/440 VAC			837 271	1.2-6
S3UM	24 VDC	415/460 VAC			837 280	1.2-6
S3UM	24 VDC	440/480 VAC			837 285	1.2-6
S3UM	24 VDC	500/550 VAC			837 290	1.2-6
S3UM	120 VAC	440/480 VAC			837 395	1.2-6
S3UM	230 VAC	42 VAC			837 340	1.2-6
S3UM	230 VAC	100/110 VAC			837 350	1.2-6
S3UM	230 VAC	230 VAC			837 360	1.2-6
S3UM	230 VAC	400/440 VAC			837 370	1.2-6
S3UM	230 VAC	415/460 VAC			837 380	1.2-6
S3UM	230 VAC	500/550 VAC			837 390	1.2-6

Relays for electrical safety
Numerically by order number

Order no.	Type	U_B	U_M	I_M	R_{an}	Page
407 710	S1SW P	24 - 240 VAC/DC	690 VAC/DC			1.2-47
760 100	PMD s10	24 - 240 VAC/DC				1.1-2
760 120	PMD s20	24 - 240 V AC/DC				1.1-11
761 100	PMD s10 C	24 - 240 VAC/DC				1.1-2
761 120	PMD s20 C	24 - 240 V AC/DC				1.1-11
827 225	S1UM UP	24 VDC	500 VAC/DC			1.2-2
827 230	S1UM	24 VAC	500 VAC/DC			1.2-2
827 235	S1UM UP	24 VAC	500 VAC/DC			1.2-2
827 240	S1UM	42 - 48 VAC	500 VAC/DC			1.2-2
827 245	S1UM UP	42 - 48 VAC	500 VAC/DC			1.2-2
827 250	S1UM	110 - 130 VAC	500 VAC/DC			1.2-2
827 255	S1UM UP	110 - 130 VAC	500 VAC/DC			1.2-2
827 260	S1UM	230 - 240 VAC	500 VAC/DC			1.2-2
827 265	S1UM UP	230 - 240 VAC	500 VAC/DC			1.2-2
828 020	S1IM	24 VAC		15 A		1.2-21
828 030	S1IM	42 - 48 VAC		15 A		1.2-21
828 035	S1IM UP	24 VDC		15 A		1.2-21
828 040	S1IM	110 - 130 V AC		15 A		1.2-21
828 050	S1IM	230 - 240 VAC		15 A		1.2-21
837 240	S3UM	24 VDC	42 VAC			1.2-6
837 250	S3UM	24 VDC	100/110 VAC			1.2-6
837 251	S3UM	24 VDC	100/110 VAC			1.2-6
837 260	S3UM	24 VDC	230 VAC			1.2-6
837 270	S3UM	24 VDC	400/440 VAC			1.2-6
837 271	S3UM	24 VDC	400/440 VAC			1.2-6
837 280	S3UM	24 VDC	415/460 VAC			1.2-6
837 285	S3UM	24 VDC	440/480 VAC			1.2-6
837 290	S3UM	24 VDC	500/550 VAC			1.2-6
837 340	S3UM	230 VAC	42 VAC			1.2-6
837 350	S3UM	230 VAC	100/110 VAC			1.2-6
837 360	S3UM	230 VAC	230 VAC			1.2-6
837 370	S3UM	230 VAC	400/440 VAC			1.2-6
837 380	S3UM	230 VAC	415/460 VAC			1.2-6
837 390	S3UM	230 VAC	500/550 VAC			1.2-6
837 395	S3UM	120 VAC	440/480 VAC			1.2-6
839 400	S1MN	24 VAC/DC				1.2-37
839 405	S1MN	48 VAC				1.2-37
839 410	S1MN	110 VAC				1.2-37
839 415	S1MN	230 VAC				1.2-37
839 420	S1MN	240 VAC				1.2-37
839 425	S1MN	400 VAC				1.2-37
839 600	S1M0	24 VAC/DC				1.2-42
839 620	S1M0	48 VAC				1.2-42
839 630	S1M0	110 VAC				1.2-42
839 650	S1M0	230 VAC				1.2-42
839 655	S1M0	240 VAC				1.2-42
839 660	S1M0	400 VAC				1.2-42
839 725	S1MS	48 VAC				1.2-32
839 740	S1MS	110 VAC				1.2-32
839 760	S1MS	230 VAC				1.2-32
839 765	S1MS	240 VAC				1.2-32
839 770	S1MS	400 VAC				1.2-32
839 775	S1MS	24 VAC/DC				1.2-32
884 100	S1EN	24 - 240 VAC/DC			50 KΩ	1.2-25
884 110	S1EN	24 - 240 VAC/DC			200 KΩ	1.2-25
890 000	S1WP	24 VDC	0 - 120 VAC/DC	9 A		1.2-14
890 010	S1WP	24 VDC	0 - 240 VAC/DC	9 A		1.2-14

Pilz GmbH & Co. KG, Felix-Wankel-Straße 2, 73760 Ostfildern, Germany
Telephone: +49 711 3409-0, Telefax: +49 711 3409-133, E-Mail: pilz.gmbh@pilz.de

Relays for electrical safety
Numerically by order number

Order no.	Type	U_B	U_M	I_M	R_{an}	Page
890 020	S1WP	24 VDC	0 - 415 VAC/DC	9 A		1.2-14
890 030	S1WP	24 VDC	0 - 550 VAC/DC	9 A		1.2-14
890 040	S1WP	230 VAC/DC	0 - 120 VAC/DC	9 A		1.2-14
890 050	S1WP	230 VAC/DC	0 - 240 VAC/DC	9 A		1.2-14
890 060	S1WP	230 VAC/DC	0 - 415 VAC/DC	9 A		1.2-14
890 070	S1WP	230 VAC/DC	0 - 550 VAC/DC	9 A		1.2-14
890 100	S1WP	24 VDC	0 - 120 VAC/DC	18 A		1.2-14
890 110	S1WP	24 VDC	0 -240 VAC/DC	18 A		1.2-14
890 120	S1WP	24 VDC	0 - 415 VAC/DC	18 A		1.2-14
890 130	S1WP	24 VDC	0 - 550 VAC/DC	18 A		1.2-14
890 140	S1WP	230 VAC/DC	0 - 120 VAC/DC	18 A		1.2-14
890 150	S1WP	230 VAC/DC	0 - 240 VAC/DC	18 A		1.2-14
890 160	S1WP	230 VAC/DC	0 - 415 VAC/DC	18 A		1.2-14
890 170	S1WP	230 VAC/DC	0 - 550 VAC/DC	18 A		1.2-14
890 200	S1PN	200 - 240 V				1.2-11
890 210	S1PN	400 - 500 V				1.2-11
890 220	S1PN	550 - 690 V				1.2-11

Relays for functional safety
Alphabetically by type

Type	Features		Terminals	Order no.	Page
P2HZ X1.10P		24 VDC	Screw terminals	777 341	2.2-202
P2HZ X1.10P C		24 VDC	Spring-loaded terminals	787 341	2.2-202
P2HZ X1P	24 VAC		Screw terminals	777 330	2.2-194
P2HZ X1P	42 VAC		Screw terminals	777 331	2.2-194
P2HZ X1P	48 VAC		Screw terminals	777 332	2.2-194
P2HZ X1P	110 VAC		Screw terminals	777 434	2.2-194
P2HZ X1P	115 VAC		Screw terminals	777 435	2.2-194
P2HZ X1P	120 VAC		Screw terminals	777 436	2.2-194
P2HZ X1P	230 VAC		Screw terminals	777 438	2.2-194
P2HZ X1P	240 VAC		Screw terminals	777 439	2.2-194
P2HZ X1P		24 VDC	Screw terminals	777 340	2.2-194
P2HZ X1P C	24 VAC		Spring-loaded terminals	787 330	2.2-194
P2HZ X1P C	42 VAC		Spring-loaded terminals	787 331	2.2-194
P2HZ X1P C	48 VAC		Spring-loaded terminals	787 332	2.2-194
P2HZ X1P C	110 VAC		Spring-loaded terminals	787 434	2.2-194
P2HZ X1P C	115 VAC		Spring-loaded terminals	787 435	2.2-194
P2HZ X1P C	120 VAC		Spring-loaded terminals	787 436	2.2-194
P2HZ X1P C	230 VAC		Spring-loaded terminals	787 438	2.2-194
P2HZ X1P C	240 VAC		Spring-loaded terminals	787 439	2.2-194
P2HZ X1P C		24 VDC	Spring-loaded terminals	787 340	2.2-194
P2HZ X4P	24 VAC		Screw terminals	777 354	2.2-209
P2HZ X4P		24 VDC	Screw terminals	777 355	2.2-209
P2HZ X4P C	24 VAC		Spring-loaded terminals	787 354	2.2-209
P2HZ X4P C		24 VDC	Spring-loaded terminals	787 355	2.2-209
PMUT X1P		24 VDC	Screw terminals	778 010	2.2-185
PMUT X1P C		24 VDC	Spring-loaded terminals	788 010	2.2-185
PNOZ s1		24 VDC	With screw terminal	750 101	2.3-2
PNOZ s1 C		24 VDC	With spring-loaded terminal	751 101	2.3-2
PNOZ s10		24 VDC	With screw terminal	750 110	2.3-114
PNOZ s10 C		24 VDC	With spring-loaded terminal	751 110	2.3-114
PNOZ s11		24 VDC	With screw terminal	750 111	2.3-122
PNOZ s11 C		24 VDC	With spring-loaded terminal	751 111	2.3-122
PNOZ s2		24 VDC	With screw terminal	750 102	2.3-10
PNOZ s2 C		24 VDC	With spring-loaded terminal	751 102	2.3-10
PNOZ s22		24 VDC	With screw terminal	750 132	2.3-130
PNOZ s22 C		24 VDC	With spring-loaded terminal	751 132	2.3-130
PNOZ s3		24 VDC	With screw terminals	750 103	2.3-19
PNOZ s3 C		24 VDC	With spring-loaded terminals	751 103	2.3-19
PNOZ s30	24 - 240 VAC/DC		With screw terminals	750 330	2.3-148
PNOZ s30 C	24 - 240 VAC/DC		With spring-loaded terminals	751 330	2.3-148
PNOZ s4		24 VDC	With screw terminals	750 104	2.3-28
PNOZ s4	48 – 240 VAC/DC		With screw terminals	750 134	2.3-28
PNOZ s4 C		24 VDC	With spring-loaded terminals	751 104	2.3-28
PNOZ s4 C	48 – 240 VAC/DC		With spring-loaded terminals	751 134	2.3-28
PNOZ s4.1		24 V DC	with screw terminals	750 124	2.3-38
PNOZ s4.1	48 - 240 V AC/DC		with screw terminals	750 154	2.3-38
PNOZ s4.1 C		24 V DC	with spring-loaded terminals	751 124	2.3-38
PNOZ s4.1 C	48 - 240 V AC/DC		with spring-loaded terminals	751 154	2.3-38
PNOZ s5		24 VDC	With screw terminals	750 105	2.3-47
PNOZ s5	48 – 240 VAC	48 – 240 VDC	With screw terminals	750 135	2.3-47
PNOZ s5 C		24 VDC	With spring-loaded terminals	751 105	2.3-47
PNOZ s5 C	48 – 240 VAC	48 – 240 VDC	With spring-loaded terminals	751 135	2.3-47
PNOZ s5 C (coated version)		24 VDC	With spring-loaded terminals	751 185	2.3-47
PNOZ s6		24 VDC	With screw terminals	750 106	2.3-58
PNOZ s6	48 – 240 VAC/DC		With screw terminals	750 136	2.3-58

Pilz GmbH & Co. KG, Felix-Wankel-Straße 2, 73760 Ostfildern, Germany
Telephone: +49 711 3409-0, Telefax: +49 711 3409-133, E-Mail: pilz.gmbh@pilz.de

Relays for functional safety
Alphabetically by type

Type	Features		Terminals	Order no.	Page
PNOZ s6 C		24 VDC	With spring-loaded terminals	751 106	2.3-58
PNOZ s6 C	48 – 240 VAC/DC		With spring-loaded terminals	751 136	2.3-58
PNOZ s6.1		24 VDC	With screw terminals	750 126	2.3-67
PNOZ s6.1	48 – 240 VAC/DC		With screw terminals	750 156	2.3-67
PNOZ s6.1 C		24 VDC	With spring-loaded terminals	751 126	2.3-67
PNOZ s6.1 C	48 – 240 VAC/DC		With spring-loaded terminals	751 156	2.3-67
PNOZ s7		24 VDC	With screw terminal	750 107	2.3-78
PNOZ s7 C		24 VDC	With spring-loaded terminal	751 107	2.3-78
PNOZ s7 C (coated version)		24 VDC	With spring-loaded terminal	751 187	2.3-78
PNOZ s7.1		24 VDC	With screw terminals	750 167	2.3-86
PNOZ s7.1 C		24 VDC	With spring-loaded terminals	751 167	2.3-86
PNOZ s7.2		24 VDC	With screw terminals	750 177	2.3-97
PNOZ s7.2 C		24 VDC	With spring-loaded terminals	751 177	2.3-97
PNOZ s8		24 VDC	With screw terminal	750 108	2.3-107
PNOZ s8 C		24 VDC	With spring-loaded terminal	751 108	2.3-107
PNOZ s9		24 VDC	With screw terminals	750 109	2.3-137
PNOZ s9 C		24 VDC	With spring-loaded terminals	751 109	2.3-137
PNOZ s9 C (coated version)		24 VDC	With spring-loaded terminals	751 189	2.3-137
PNOZ X10.11P		24 VDC	Screw terminals	777 750	2.2-117
PNOZ X10.11P C		24 VDC	Spring-loaded terminals	787 750	2.2-117
PNOZ X11P	24 VAC/DC		Screw terminals	777 080	2.2-126
PNOZ X11P	110 - 120 VAC	24 VDC	Screw terminals	777 083	2.2-126
PNOZ X11P	230 - 240 VAC	24 VDC	Screw terminals	777 086	2.2-126
PNOZ X11P C	24 VAC/DC		Spring-loaded terminals	787 080	2.2-126
PNOZ X11P C	110 - 120 VAC	24 VDC	Spring-loaded terminals	787 083	2.2-126
PNOZ X11P C	230 - 240 VAC	24 VDC	Spring-loaded terminals	787 086	2.2-126
PNOZ X1P		24 VDC	Screw terminals	777 100	2.2-2
PNOZ X1P C		24 VDC	Spring-loaded terminals	787 100	2.2-2
PNOZ X2.1VP		24 VDC	Screw terminals	777 600	2.2-20
PNOZ X2.1VP C		24 VDC	Spring-loaded terminals	787 600	2.2-20
PNOZ X2.3P	24 VAC/DC		Screw terminals	777 304	2.2-29
PNOZ X2.3P C	24 VAC/DC		Spring-loaded terminals	787 304	2.2-29
PNOZ X2.7P	24 VAC	24 VDC	Screw terminals	777 305	2.2-38
PNOZ X2.7P	24 - 240 VAC	24 - 240 VDC	Screw terminals	777 306	2.2-38
PNOZ X2.7P C	24 VAC	24 VDC	Spring-loaded terminals	787 305	2.2-38
PNOZ X2.7P C	24 - 240 VAC	24 - 240 VDC	Spring-loaded terminals	787 306	2.2-38
PNOZ X2.8P	24 VAC	24 VDC	Screw terminals	777 301	2.2-48
PNOZ X2.8P	24 - 240 VAC	24 - 240 VDC	Screw terminals	777 302	2.2-48
PNOZ X2.8P C	24 VAC	24 VDC	Spring-loaded terminals	787 301	2.2-48
PNOZ X2.8P C	24 - 240 VAC	24 - 240 VDC	Spring-loaded terminals	787 302	2.2-48
PNOZ X2.9P		24 VDC	Screw terminals	777 300	2.2-59
PNOZ X2.9P C		24 VDC	Spring-loaded terminals	787 300	2.2-59
PNOZ X2P	24 VAC	24 VDC	Screw terminals	777 303	2.2-11
PNOZ X2P	48 - 240 VAC	48 - 240 VDC	Screw terminals	777 307	2.2-11
PNOZ X2P C	24 VAC	24 VDC	Spring-loaded terminals	787 303	2.2-11
PNOZ X2P C	48 - 240 VAC	48 - 240 VDC	Spring-loaded terminals	787 307	2.2-11
PNOZ X3.10P	24 VAC/DC		Screw terminals	777 314	2.2-78
PNOZ X3.10P C	24 VAC/DC		Spring-loaded terminals	787 314	2.2-78
PNOZ X3P	24 VAC/DC		Screw terminals	777 310	2.2-68
PNOZ X3P	24 - 240 VAC/DC		Screw terminals	777 313	2.2-68
PNOZ X3P C	24 VAC/DC		Spring-loaded terminals	787 310	2.2-68
PNOZ X3P C	24 - 240 VAC/DC		Spring-loaded terminals	787 313	2.2-68
PNOZ X7P	24 VAC/DC		Screw terminals	777 059	2.2-87
PNOZ X7P	110 - 120 VAC		Screw terminals	777 053	2.2-87
PNOZ X7P	230 - 240 VAC		Screw terminals	777 056	2.2-87

Relays for functional safety
Alphabetically by type

Type	Features			Terminals	Order no.	Page
PNOZ X7P C	24 VAC/DC			Spring-loaded terminals	787 059	2.2-87
PNOZ X7P C	110 - 120 VAC			Spring-loaded terminals	787 053	2.2-87
PNOZ X7P C	230 - 240 VAC			Spring-loaded terminals	787 056	2.2-87
PNOZ X8P		24 VDC		Screw terminals	777 760	2.2-97
PNOZ X8P	110 VAC			Screw terminals	777 764	2.2-97
PNOZ X8P	115 VAC			Screw terminals	777 765	2.2-97
PNOZ X8P	120 VAC			Screw terminals	777 766	2.2-97
PNOZ X8P	230 VAC			Screw terminals	777 768	2.2-97
PNOZ X8P	24 VAC			Screw terminals	777 770	2.2-97
PNOZ X8P C		24 VDC		Spring-loaded terminals	787 760	2.2-97
PNOZ X8P C	110 VAC			Spring-loaded terminals	787 764	2.2-97
PNOZ X8P C	115 VAC			Spring-loaded terminals	787 765	2.2-97
PNOZ X8P C	120 VAC			Spring-loaded terminals	787 766	2.2-97
PNOZ X8P C	230 VAC			Spring-loaded terminals	787 768	2.2-97
PNOZ X8P C	24 VAC			Spring-loaded terminals	787 770	2.2-97
PNOZ X9P	110 - 240 VAC	24 VDC		Screw terminals	777 606	2.2-107
PNOZ X9P		24 VDC		Screw terminals	777 609	2.2-107
PNOZ X9P		12 VDC		Screw terminals	777 607	2.2-107
PNOZ X9P C	110 - 240 VAC	24 VDC		Spring-loaded terminals	787 606	2.2-107
PNOZ X9P C		24 VDC		Spring-loaded terminals	787 609	2.2-107
PNOZ XV1P		24 VDC	3 s selectable	Screw terminals	777 601	2.2-135
PNOZ XV1P		24 VDC	30 s selectable	Screw terminals	777 602	2.2-135
PNOZ XV1P C		24 VDC	3 s selectable	Spring-loaded terminals	787 601	2.2-135
PNOZ XV1P C		24 VDC	30 s selectable	Spring-loaded terminals	787 602	2.2-135
PNOZ XV2.1P	24 - 240 VAC/DC		3 s selectable	Screw terminals	777 542	2.2-154
PNOZ XV2.1P	24 - 240 VAC/DC		30 s selectable	Screw terminals	777 540	2.2-154
PNOZ XV2.1P	24 - 240 VAC/DC		300 s selectable	Screw terminals	777 548	2.2-154
PNOZ XV2.1P	24 - 240 VAC/DC		0.5 s fixed	Screw terminals	777 544	2.2-154
PNOZ XV2.1P	24 - 240 VAC/DC		3 s fixed	Screw terminals	777 545	2.2-154
PNOZ XV2.1P	24 - 240 VAC/DC		10 s fixed	Screw terminals	777 547	2.2-154
PNOZ XV2.1P C	24 - 240 VAC/DC		3 s selectable	Spring-loaded terminals	787 542	2.2-154
PNOZ XV2.1P C	24 - 240 VAC/DC		30 s selectable	Spring-loaded terminals	787 540	2.2-154
PNOZ XV2.1P C	24 - 240 VAC/DC		300 s selectable	Spring-loaded terminals	787 548	2.2-154
PNOZ XV2P		24 VDC	30 s selectable	Screw terminals	777 500	2.2-144
PNOZ XV2P		24 VDC	3 s selectable	Screw terminals	777 502	2.2-144
PNOZ XV2P		24 VDC	1 s fixed	Screw terminals	777 503	2.2-144
PNOZ XV2P		24 VDC	0.5 s fixed	Screw terminals	777 504	2.2-144
PNOZ XV2P C		24 VDC	30 s selectable	Spring-loaded terminals	787 500	2.2-144
PNOZ XV2P C		24 VDC	3 s selectable	Spring-loaded terminals	787 502	2.2-144
PNOZ XV2P C		24 VDC	1 s fixed	Spring-loaded terminals	787 503	2.2-144
PNOZ XV2P C		24 VDC	0.5 s fixed	Spring-loaded terminals	787 504	2.2-144
PNOZ XV3.1P		24 VDC	30 s selectable	Screw terminals	777 520	2.2-174
PNOZ XV3.1P		24 VDC	3 s selectable	Screw terminals	777 522	2.2-174
PNOZ XV3.1P		24 VDC	3 s fixed	Screw terminals	777 525	2.2-174
PNOZ XV3.1P	24 - 240 VAC/DC		30 s selectable	Screw terminals	777 530	2.2-174
PNOZ XV3.1P	24 - 240 VAC/DC		3 s selectable	Screw terminals	777 532	2.2-174
PNOZ XV3.1P	24 - 240 VAC/DC		300 s selectable	Screw terminals	777 538	2.2-174
PNOZ XV3.1P C		24 VDC	30 s selectable	Spring-loaded terminals	787 520	2.2-174
PNOZ XV3.1P C		24 VDC	3 s selectable	Spring-loaded terminals	787 522	2.2-174
PNOZ XV3.1P C	24 - 240 VAC/DC		30 s selectable	Spring-loaded terminals	787 530	2.2-174
PNOZ XV3.1P C	24 - 240 VAC/DC		3 s selectable	Spring-loaded terminals	787 532	2.2-174
PNOZ XV3.1P C	24 - 240 VAC/DC		300 s selectable	Spring-loaded terminals	787 538	2.2-174

Pilz GmbH & Co. KG, Felix-Wankel-Straße 2, 73760 Ostfildern, Germany
Telephone: +49 711 3409-0, Telefax: +49 711 3409-133, E-Mail: pilz.gmbh@pilz.de

Relays for functional safety
Alphabetically by type

Type	Features			Terminals	Order no.	Page
PNOZ XV3P		24 VDC	0.5 s fixed	Screw terminals	777 514	2.2-164
PNOZ XV3P		24 VDC	3 s fixed	Screw terminals	777 515	2.2-164
PNOZ XV3P		24 VDC	10 s fixed	Screw terminals	777 517	2.2-164
PNOZ XV3P		24 VDC	3 s selectable	Screw terminals	777 512	2.2-164
PNOZ XV3P		24 VDC	30 s selectable	Screw terminals	777 510	2.2-164
PNOZ XV3P		24 VDC	300 s selectable	Screw terminals	777 518	2.2-164
PNOZ XV3P C		24 VDC	3 s selectable	Spring-loaded terminals	787 512	2.2-164
PNOZ XV3P C		24 VDC	30 s selectable	Spring-loaded terminals	787 510	2.2-164
PNOZ XV3P C		24 VDC	300 s selectable	Spring-loaded terminals	787 518	2.2-164
PSWZ X1P	24 - 240 VAC/DC		0.02 - 0.5 V	Screw terminals	777 949	2.2-216
PSWZ X1P	24 - 240 VAC/DC		0.12 - 3 V	Screw terminals	777 950	2.2-216
PSWZ X1P	24 - 240 VAC/DC		0.0075 – 0.5 V	Screw terminals	777 951	2.2-216
PSWZ X1P (coated version)	24 - 240 VAC/DC		0.02 - 0.5 V	Screw terminals	777 959	2.2-216
PSWZ X1P C	24 - 240 VAC/DC		0.02 - 0.5 V	Spring-loaded terminals	787 949	2.2-216
PSWZ X1P C	24 - 240 VAC/DC		0.12 - 3 V	Spring-loaded terminals	787 950	2.2-216
PSWZ X1P C	24 - 240 VAC/DC		0.0075 – 0.5 V	Spring-loaded terminals	787 951	2.2-216
PZE 9P	24 VAC/DC			Screw terminals	777 140	2.2-272
PZE 9P	24 VAC/DC, 100 - 240 VAC/DC			Screw terminals	777 148	2.2-272
PZE 9P C	24 VAC/DC			Spring-loaded terminals	787 140	2.2-272
PZE 9P C	24 VAC/DC, 100 - 240 VAC/DC			Spring-loaded terminals	787 148	2.2-272
PZE X4.1P		24 VDC		Screw terminals	777 587	2.2-232
PZE X4.1P C		24 VDC		Spring-loaded terminals	787 587	2.2-232
PZE X4P		24 VDC		Screw terminals	777 585	2.2-224
PZE X4P C		24 VDC		Spring-loaded terminals	787 585	2.2-224
PZE X4VP		24 VDC	0.5 s fixed	Screw terminals	777 580	2.2-240
PZE X4VP		24 VDC	1 s fixed	Screw terminals	777 581	2.2-240
PZE X4VP		24 VDC	2 s fixed	Screw terminals	777 582	2.2-240
PZE X4VP		24 VDC	3 s fixed	Screw terminals	777 583	2.2-240
PZE X4VP C		24 VDC	0.5 s fixed	Spring-loaded terminals	787 580	2.2-240
PZE X4VP C		24 VDC	1 s fixed	Spring-loaded terminals	787 581	2.2-240
PZE X4VP C		24 VDC	2 s fixed	Spring-loaded terminals	787 582	2.2-240
PZE X4VP C		24 VDC	3 s fixed	Spring-loaded terminals	787 583	2.2-240
PZE X4VP4		24 VDC	4 s selectable	Screw terminals	777 586	2.2-248
PZE X4VP4 C		24 VDC	4 s selectable	Spring-loaded terminals	787 586	2.2-248
PZE X4VP8		24 VDC	8 s selectable	Screw terminals	777 584	2.2-256
PZE X4VP8 C		24 VDC	8 s selectable	Spring-loaded terminals	787 584	2.2-256
PZE X5P		24 VDC		Screw terminals	777 150	2.2-264
PZE X5P C		24 VDC		Spring-loaded terminals	787 150	2.2-264

Relays for functional safety
Numerically by order number

Order no.	Type	Features		Terminals	Page
750 101	PNOZ s1		24 VDC	With screw terminal	2.3-2
750 102	PNOZ s2		24 VDC	With screw terminal	2.3-10
750 103	PNOZ s3		24 VDC	With screw terminals	2.3-19
750 104	PNOZ s4		24 VDC	With screw terminals	2.3-28
750 105	PNOZ s5		24 VDC	With screw terminals	2.3-47
750 106	PNOZ s6		24 VDC	With screw terminals	2.3-58
750 107	PNOZ s7		24 VDC	With screw terminal	2.3-78
750 108	PNOZ s8		24 VDC	With screw terminal	2.3-107
750 109	PNOZ s9		24 VDC	With screw terminals	2.3-137
750 110	PNOZ s10		24 VDC	With screw terminal	2.3-114
750 111	PNOZ s11		24 VDC	With screw terminal	2.3-122
750 124	PNOZ s4.1		24 V DC	with screw terminals	2.3-38
750 126	PNOZ s6.1		24 VDC	With screw terminals	2.3-67
750 132	PNOZ s22		24 VDC	With screw terminal	2.3-130
750 134	PNOZ s4	48 – 240 VAC/DC		With screw terminals	2.3-28
750 135	PNOZ s5	48 – 240 VAC	48 – 240 VDC	With screw terminals	2.3-47
750 136	PNOZ s6	48 – 240 VAC/DC		With screw terminals	2.3-58
750 154	PNOZ s4.1	48 - 240 V AC/DC		with screw terminals	2.3-38
750 156	PNOZ s6.1	48 – 240 VAC/DC		With screw terminals	2.3-67
750 167	PNOZ s7.1		24 VDC	With screw terminals	2.3-86
750 177	PNOZ s7.2		24 VDC	With screw terminals	2.3-97
750 330	PNOZ s30	24 - 240 VAC/DC		With screw terminals	2.3-148
751 101	PNOZ s1 C		24 VDC	With spring-loaded terminal	2.3-2
751 102	PNOZ s2 C		24 VDC	With spring-loaded terminal	2.3-10
751 103	PNOZ s3 C		24 VDC	With spring-loaded terminals	2.3-19
751 104	PNOZ s4 C		24 VDC	With spring-loaded terminals	2.3-28
751 105	PNOZ s5 C		24 VDC	With spring-loaded terminals	2.3-47
751 106	PNOZ s6 C		24 VDC	With spring-loaded terminals	2.3-58
751 107	PNOZ s7 C		24 VDC	With spring-loaded terminal	2.3-78
751 108	PNOZ s8 C		24 VDC	With spring-loaded terminal	2.3-107
751 109	PNOZ s9 C		24 VDC	With spring-loaded terminals	2.3-137
751 110	PNOZ s10 C		24 VDC	With spring-loaded terminal	2.3-114
751 111	PNOZ s11 C		24 VDC	With spring-loaded terminal	2.3-122
751 124	PNOZ s4.1 C		24 V DC	with spring-loaded terminals	2.3-38
751 126	PNOZ s6.1 C		24 VDC	With spring-loaded terminals	2.3-67
751 132	PNOZ s22 C		24 VDC	With spring-loaded terminal	2.3-130
751 134	PNOZ s4 C	48 – 240 VAC/DC		With spring-loaded terminals	2.3-28
751 135	PNOZ s5 C	48 – 240 VAC	48 – 240 VDC	With spring-loaded terminals	2.3-47
751 136	PNOZ s6 C	48 – 240 VAC/DC		With spring-loaded terminals	2.3-58
751 154	PNOZ s4.1 C	48 - 240 V AC/DC		with spring-loaded terminals	2.3-38
751 156	PNOZ s6.1 C	48 – 240 VAC/DC		With spring-loaded terminals	2.3-67
751 167	PNOZ s7.1 C		24 VDC	With spring-loaded terminals	2.3-86
751 177	PNOZ s7.2 C		24 VDC	With spring-loaded terminals	2.3-97
751 185	PNOZ s5 C (coated version)		24 VDC	With spring-loaded terminals	2.3-47
751 187	PNOZ s7 C (coated version)		24 VDC	With spring-loaded terminal	2.3-78
751 189	PNOZ s9 C (coated version)		24 VDC	With spring-loaded terminals	2.3-137
751 330	PNOZ s30 C	24 - 240 VAC/DC		With spring-loaded terminals	2.3-148
777 053	PNOZ X7P	110 - 120 VAC		Screw terminals	2.2-87
777 056	PNOZ X7P	230 - 240 VAC		Screw terminals	2.2-87
777 059	PNOZ X7P	24 VAC/DC		Screw terminals	2.2-87
777 080	PNOZ X11P	24 VAC/DC		Screw terminals	2.2-126
777 083	PNOZ X11P	110 - 120 VAC	24 VDC	Screw terminals	2.2-126
777 086	PNOZ X11P	230 - 240 VAC	24 VDC	Screw terminals	2.2-126
777 100	PNOZ X1P		24 VDC	Screw terminals	2.2-2

Pilz GmbH & Co. KG, Felix-Wankel-Straße 2, 73760 Ostfildern, Germany
Telephone: +49 711 3409-0, Telefax: +49 711 3409-133, E-Mail: pilz.gmbh@pilz.de

Relays for functional safety
Numerically by order number

Order no.	Type	Features			Terminals	Page
777 140	PZE 9P	24 VAC/DC			Screw terminals	2.2-272
777 148	PZE 9P	24 VAC/DC, 100 - 240 VAC/DC			Screw terminals	2.2-272
777 150	PZE X5P		24 VDC		Screw terminals	2.2-264
777 300	PNOZ X2.9P		24 VDC		Screw terminals	2.2-59
777 301	PNOZ X2.8P	24 VAC	24 VDC		Screw terminals	2.2-48
777 302	PNOZ X2.8P	24 - 240 VAC	24 - 240 VDC		Screw terminals	2.2-48
777 303	PNOZ X2P	24 VAC	24 VDC		Screw terminals	2.2-11
777 304	PNOZ X2.3P	24 VAC/DC			Screw terminals	2.2-29
777 305	PNOZ X2.7P	24 VAC	24 VDC		Screw terminals	2.2-38
777 306	PNOZ X2.7P	24 - 240 VAC	24 - 240 VDC		Screw terminals	2.2-38
777 307	PNOZ X2P	48 - 240 VAC	48 - 240 VDC		Screw terminals	2.2-11
777 310	PNOZ X3P	24 VAC/DC			Screw terminals	2.2-68
777 313	PNOZ X3P	24 - 240 VAC/DC			Screw terminals	2.2-68
777 314	PNOZ X3.10P	24 VAC/DC			Screw terminals	2.2-78
777 330	P2HZ X1P	24 VAC			Screw terminals	2.2-194
777 331	P2HZ X1P	42 VAC			Screw terminals	2.2-194
777 332	P2HZ X1P	48 VAC			Screw terminals	2.2-194
777 340	P2HZ X1P		24 VDC		Screw terminals	2.2-194
777 341	P2HZ X1.10P		24 VDC		Screw terminals	2.2-202
777 354	P2HZ X4P	24 VAC			Screw terminals	2.2-209
777 355	P2HZ X4P		24 VDC		Screw terminals	2.2-209
777 434	P2HZ X1P	110 VAC			Screw terminals	2.2-194
777 435	P2HZ X1P	115 VAC			Screw terminals	2.2-194
777 436	P2HZ X1P	120 VAC			Screw terminals	2.2-194
777 438	P2HZ X1P	230 VAC			Screw terminals	2.2-194
777 439	P2HZ X1P	240 VAC			Screw terminals	2.2-194
777 500	PNOZ XV2P		24 VDC	30 s selectable	Screw terminals	2.2-144
777 502	PNOZ XV2P		24 VDC	3 s selectable	Screw terminals	2.2-144
777 503	PNOZ XV2P		24 VDC	1 s fixed	Screw terminals	2.2-144
777 504	PNOZ XV2P		24 VDC	0.5 s fixed	Screw terminals	2.2-144
777 510	PNOZ XV3P		24 VDC	30 s selectable	Screw terminals	2.2-164
777 512	PNOZ XV3P		24 VDC	3 s selectable	Screw terminals	2.2-164
777 514	PNOZ XV3P		24 VDC	0.5 s fixed	Screw terminals	2.2-164
777 515	PNOZ XV3P		24 VDC	3 s fixed	Screw terminals	2.2-164
777 517	PNOZ XV3P		24 VDC	10 s fixed	Screw terminals	2.2-164
777 518	PNOZ XV3P		24 VDC	300 s selectable	Screw terminals	2.2-164
777 520	PNOZ XV3.1P		24 VDC	30 s selectable	Screw terminals	2.2-174
777 522	PNOZ XV3.1P		24 VDC	3 s selectable	Screw terminals	2.2-174
777 525	PNOZ XV3.1P		24 VDC	3 s fixed	Screw terminals	2.2-174
777 530	PNOZ XV3.1P	24 - 240 VAC/DC		30 s selectable	Screw terminals	2.2-174
777 532	PNOZ XV3.1P	24 - 240 VAC/DC		3 s selectable	Screw terminals	2.2-174
777 538	PNOZ XV3.1P	24 - 240 VAC/DC		300 s selectable	Screw terminals	2.2-174
777 540	PNOZ XV2.1P	24 - 240 VAC/DC		30 s selectable	Screw terminals	2.2-154
777 542	PNOZ XV2.1P	24 - 240 VAC/DC		3 s selectable	Screw terminals	2.2-154
777 544	PNOZ XV2.1P	24 - 240 VAC/DC		0.5 s fixed	Screw terminals	2.2-154
777 545	PNOZ XV2.1P	24 - 240 VAC/DC		3 s fixed	Screw terminals	2.2-154
777 547	PNOZ XV2.1P	24 - 240 VAC/DC		10 s fixed	Screw terminals	2.2-154
777 548	PNOZ XV2.1P	24 - 240 VAC/DC		300 s selectable	Screw terminals	2.2-154
777 580	PZE X4VP		24 VDC	0.5 s fixed	Screw terminals	2.2-240
777 581	PZE X4VP		24 VDC	1 s fixed	Screw terminals	2.2-240
777 582	PZE X4VP		24 VDC	2 s fixed	Screw terminals	2.2-240
777 583	PZE X4VP		24 VDC	3 s fixed	Screw terminals	2.2-240
777 584	PZE X4VP8		24 VDC	8 s selectable	Screw terminals	2.2-256
777 585	PZE X4P		24 VDC		Screw terminals	2.2-224
777 586	PZE X4VP4		24 VDC	4 s selectable	Screw terminals	2.2-248
777 587	PZE X4.1P		24 VDC		Screw terminals	2.2-232

Relays for functional safety
Numerically by order number

Order no.	Type	Features			Terminals	Page
777 600	PNOZ X2.1VP		24 VDC		Screw terminals	2.2-20
777 601	PNOZ XV1P		24 VDC	3 s selectable	Screw terminals	2.2-135
777 602	PNOZ XV1P		24 VDC	30 s selectable	Screw terminals	2.2-135
777 606	PNOZ X9P	110 - 240 VAC	24 VDC		Screw terminals	2.2-107
777 607	PNOZ X9P		12 VDC		Screw terminals	2.2-107
777 609	PNOZ X9P		24 VDC		Screw terminals	2.2-107
777 750	PNOZ X10.11P		24 VDC		Screw terminals	2.2-117
777 760	PNOZ X8P		24 VDC		Screw terminals	2.2-97
777 764	PNOZ X8P	110 VAC			Screw terminals	2.2-97
777 765	PNOZ X8P	115 VAC			Screw terminals	2.2-97
777 766	PNOZ X8P	120 VAC			Screw terminals	2.2-97
777 768	PNOZ X8P	230 VAC			Screw terminals	2.2-97
777 770	PNOZ X8P	24 VAC			Screw terminals	2.2-97
777 949	PSWZ X1P	24 - 240 VAC/DC		0.02 - 0.5 V	Screw terminals	2.2-216
777 950	PSWZ X1P	24 - 240 VAC/DC		0.12 - 3 V	Screw terminals	2.2-216
777 951	PSWZ X1P	24 - 240 VAC/DC		0.0075 – 0.5 V	Screw terminals	2.2-216
777 959	PSWZ X1P (coated version)	24 - 240 VAC/DC		0.02 - 0.5 V	Screw terminals	2.2-216
778 010	PMUT X1P		24 VDC		Screw terminals	2.2-185
787 053	PNOZ X7P C	110 - 120 VAC			Spring-loaded terminals	2.2-87
787 056	PNOZ X7P C	230 - 240 VAC			Spring-loaded terminals	2.2-87
787 059	PNOZ X7P C	24 VAC/DC			Spring-loaded terminals	2.2-87
787 080	PNOZ X11P C	24 VAC/DC			Spring-loaded terminals	2.2-126
787 083	PNOZ X11P C	110 - 120 VAC	24 VDC		Spring-loaded terminals	2.2-126
787 086	PNOZ X11P C	230 - 240 VAC	24 VDC		Spring-loaded terminals	2.2-126
787 100	PNOZ X1P C		24 VDC		Spring-loaded terminals	2.2-2
787 140	PZE 9P C	24 VAC/DC			Spring-loaded terminals	2.2-272
787 148	PZE 9P C	24 VAC/DC, 100 - 240 VAC/DC			Spring-loaded terminals	2.2-272
787 150	PZE X5P C		24 VDC		Spring-loaded terminals	2.2-264
787 300	PNOZ X2.9P C		24 VDC		Spring-loaded terminals	2.2-59
787 301	PNOZ X2.8P C	24 VAC	24 VDC		Spring-loaded terminals	2.2-48
787 302	PNOZ X2.8P C	24 - 240 VAC	24 - 240 VDC		Spring-loaded terminals	2.2-48
787 303	PNOZ X2P C	24 VAC	24 VDC		Spring-loaded terminals	2.2-11
787 304	PNOZ X2.3P C	24 VAC/DC			Spring-loaded terminals	2.2-29
787 305	PNOZ X2.7P C	24 VAC	24 VDC		Spring-loaded terminals	2.2-38
787 306	PNOZ X2.7P C	24 - 240 VAC	24 - 240 VDC		Spring-loaded terminals	2.2-38
787 307	PNOZ X2P C	48 - 240 VAC	48 - 240 VDC		Spring-loaded terminals	2.2-11
787 310	PNOZ X3P C	24 VAC/DC			Spring-loaded terminals	2.2-68
787 313	PNOZ X3P C	24 - 240 VAC/DC			Spring-loaded terminals	2.2-68
787 314	PNOZ X3.10P C	24 VAC/DC			Spring-loaded terminals	2.2-78
787 330	P2HZ X1P C	24 VAC			Spring-loaded terminals	2.2-194
787 331	P2HZ X1P C	42 VAC			Spring-loaded terminals	2.2-194
787 332	P2HZ X1P C	48 VAC			Spring-loaded terminals	2.2-194
787 340	P2HZ X1P C		24 VDC		Spring-loaded terminals	2.2-194
787 341	P2HZ X1.10P C		24 VDC		Spring-loaded terminals	2.2-202
787 354	P2HZ X4P C	24 VAC			Spring-loaded terminals	2.2-209
787 355	P2HZ X4P C		24 VDC		Spring-loaded terminals	2.2-209
787 434	P2HZ X1P C	110 VAC			Spring-loaded terminals	2.2-194
787 435	P2HZ X1P C	115 VAC			Spring-loaded terminals	2.2-194
787 436	P2HZ X1P C	120 VAC			Spring-loaded terminals	2.2-194
787 438	P2HZ X1P C	230 VAC			Spring-loaded terminals	2.2-194
787 439	P2HZ X1P C	240 VAC			Spring-loaded terminals	2.2-194
787 500	PNOZ XV2P C		24 VDC	30 s selectable	Spring-loaded terminals	2.2-144
787 502	PNOZ XV2P C		24 VDC	3 s selectable	Spring-loaded terminals	2.2-144
787 503	PNOZ XV2P C		24 VDC	1 s fixed	Spring-loaded terminals	2.2-144
787 504	PNOZ XV2P C		24 VDC	0.5 s fixed	Spring-loaded terminals	2.2-144

Pilz GmbH & Co. KG, Felix-Wankel-Straße 2, 73760 Ostfildern, Germany
Telephone: +49 711 3409-0, Telefax: +49 711 3409-133, E-Mail: pilz.gmbh@pilz.de

Relays for functional safety
Numerically by order number

Order no.	Type	Features			Terminals	Page
787 510	PNOZ XV3P C		24 VDC	30 s selectable	Spring-loaded terminals	2.2-164
787 512	PNOZ XV3P C		24 VDC	3 s selectable	Spring-loaded terminals	2.2-164
787 518	PNOZ XV3P C		24 VDC	300 s selectable	Spring-loaded terminals	2.2-164
787 520	PNOZ XV3.1P C		24 VDC	30 s selectable	Spring-loaded terminals	2.2-174
787 522	PNOZ XV3.1P C		24 VDC	3 s selectable	Spring-loaded terminals	2.2-174
787 530	PNOZ XV3.1P C	24 - 240 VAC/DC		30 s selectable	Spring-loaded terminals	2.2-174
787 532	PNOZ XV3.1P C	24 - 240 VAC/DC		3 s selectable	Spring-loaded terminals	2.2-174
787 538	PNOZ XV3.1P C	24 - 240 VAC/DC		300 s selectable	Spring-loaded terminals	2.2-174
787 540	PNOZ XV2.1P C	24 - 240 VAC/DC		30 s selectable	Spring-loaded terminals	2.2-154
787 542	PNOZ XV2.1P C	24 - 240 VAC/DC		3 s selectable	Spring-loaded terminals	2.2-154
787 548	PNOZ XV2.1P C	24 - 240 VAC/DC		300 s selectable	Spring-loaded terminals	2.2-154
787 580	PZE X4VP C		24 VDC	0.5 s fixed	Spring-loaded terminals	2.2-240
787 581	PZE X4VP C		24 VDC	1 s fixed	Spring-loaded terminals	2.2-240
787 582	PZE X4VP C		24 VDC	2 s fixed	Spring-loaded terminals	2.2-240
787 583	PZE X4VP C		24 VDC	3 s fixed	Spring-loaded terminals	2.2-240
787 584	PZE X4VP8 C		24 VDC	8 s selectable	Spring-loaded terminals	2.2-256
787 585	PZE X4P C		24 VDC		Spring-loaded terminals	2.2-224
787 586	PZE X4VP4 C		24 VDC	4 s selectable	Spring-loaded terminals	2.2-248
787 587	PZE X4.1P C		24 VDC		Spring-loaded terminals	2.2-232
787 600	PNOZ X2.1VP C		24 VDC		Spring-loaded terminals	2.2-20
787 601	PNOZ XV1P C		24 VDC	3 s selectable	Spring-loaded terminals	2.2-135
787 602	PNOZ XV1P C		24 VDC	30 s selectable	Spring-loaded terminals	2.2-135
787 606	PNOZ X9P C	110 - 240 VAC	24 VDC		Spring-loaded terminals	2.2-107
787 609	PNOZ X9P C		24 VDC		Spring-loaded terminals	2.2-107
787 750	PNOZ X10.11P C		24 VDC		Spring-loaded terminals	2.2-117
787 760	PNOZ X8P C		24 VDC		Spring-loaded terminals	2.2-97
787 764	PNOZ X8P C	110 VAC			Spring-loaded terminals	2.2-97
787 765	PNOZ X8P C	115 VAC			Spring-loaded terminals	2.2-97
787 766	PNOZ X8P C	120 VAC			Spring-loaded terminals	2.2-97
787 768	PNOZ X8P C	230 VAC			Spring-loaded terminals	2.2-97
787 770	PNOZ X8P C	24 VAC			Spring-loaded terminals	2.2-97
787 949	PSWZ X1P C	24 - 240 VAC/DC		0.02 - 0.5 V	Spring-loaded terminals	2.2-216
787 950	PSWZ X1P C	24 - 240 VAC/DC		0.12 - 3 V	Spring-loaded terminals	2.2-216
787 951	PSWZ X1P C	24 - 240 VAC/DC		0.0075 – 0.5 V	Spring-loaded terminals	2.2-216
788 010	PMUT X1P C		24 VDC		Spring-loaded terminals	2.2-185

Pilz GmbH & Co. KG, Felix-Wankel-Straße 2, 73760 Ostfildern, Germany
Telephone: +49 711 3409-0, Telefax: +49 711 3409-133, E-Mail: pilz.gmbh@pilz.de

Contents	Page
Standards and directives	
European directives and position of the standards in Europe	4.1-2
Risk assessment	4.1-4
Legal regulations outside Europe, and standards for functional safety	4.1-6
Safety-related parts of control systems - General principles for design in accordance with EN ISO 13849-1	4.1-7
Functional safety and legal position of EN/IEC 61508	4.1-8
Functional safety in accordance with EN/IEC 62061	4.1-9

European directives and position of the standards in Europe

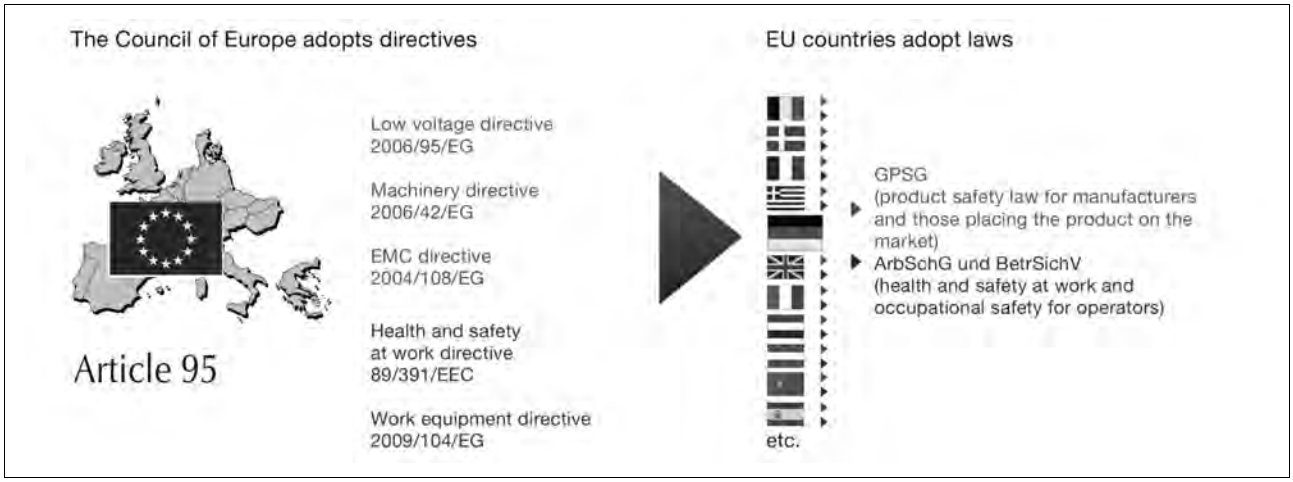

Incorporation of the directives into domestic law (using Germany as an example)

European directives

The concept of a single European internal market in terms of the "New Approach" can be traced right back to the start of the 70s: The low voltage directive is the first piece of European legislation to take into account the approach towards harmonisation of a common internal market.

Many of the directives recognise mandatory CE-marking for products, i.e. the product must be accompanied by a declaration of conformity. With a declaration of conformity the manufacturer confirms that his product meets all the requirements of the European directives that relate to his product. This means he can launch and sell his product within the scope of the EU without consideration of any national regulations.

Key engineering directives:

- General product safety (2001/95/EC)
- Health and safety (89/391/EEC)
- Use of work equipment (2009/104/EC)
- Lifts (95/16/EC)
- Waste electrical and electronic equipment (2002/96/EC)
- Electromagnetic compatibility (EMC) (2004/108/EC)
- Devices for use in potentially explosive areas (ATEX) (94/9/EC)
- Machinery (2006/42/EC)
- Low voltage equipment (2006/95/EC)
- Personal protective equipment (89/686/EEC)
- Cable cars (2000/9/EC)

The directives are addressed to member states, who are obliged to incorporate the European directives into domestic law. In Germany this is normally achieved through the device safety law.

Position of the standards in Europe

The legal status of standards is constantly under discussion. Inside Europe, i.e. within the scope of the European directives that are subject to mandatory CE-marking, a manufacturer is not bound by standards or other specifications. He simply needs to comply with the health and safety requirements of the directive(s). The associated benefits of a division between standards and legislation are obvious: It is easier for legislators to agree on the essential requirements than on technical details. Also, the directives do not regularly have to be adapted to the state of technology; member states can use their own legal system for incorporation and manufacturers are free to select the ways in which they implement the requirements of the directive.

Pilz GmbH & Co. KG, Felix-Wankel-Straße 2, 73760 Ostfildern, Germany
Telephone: +49 711 3409-0, Telefax: +49 711 3409-133, E-Mail: pilz.gmbh@pilz.de

European directives and position of the standards in Europe

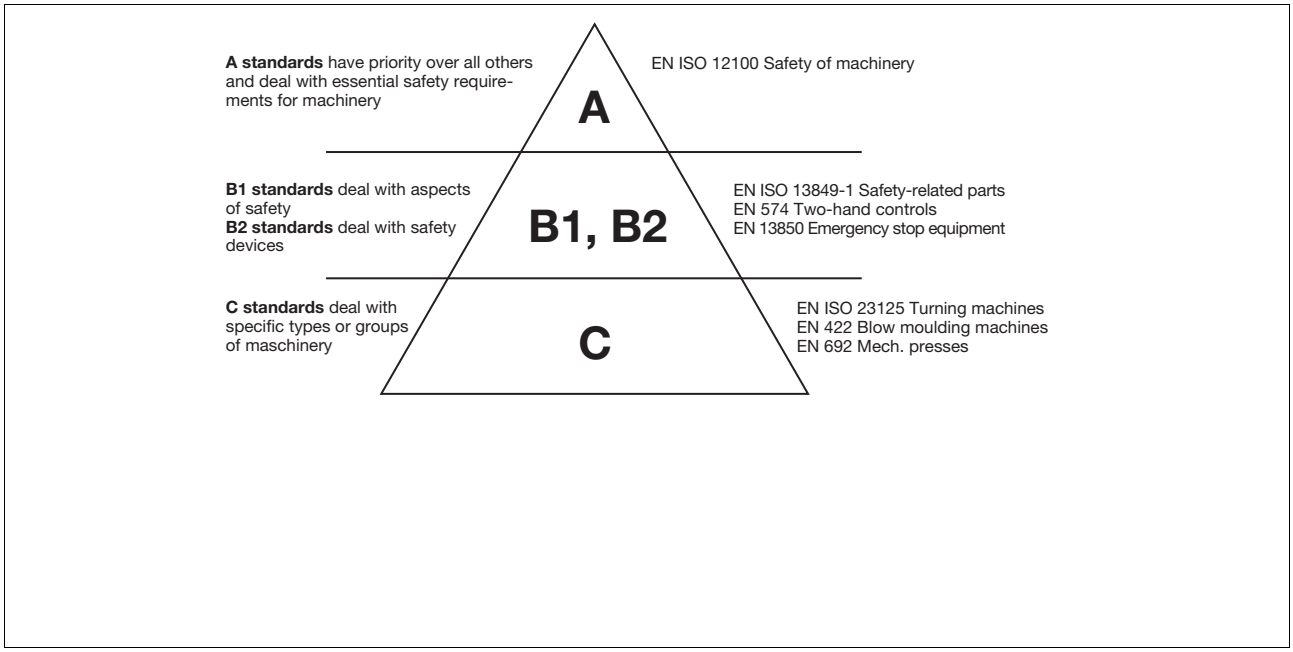

Standards pyramid

So what are the benefits of applying the standards? With so-called harmonised standards with presumption of conformity, there is a shifting of the burden of proof, i.e. if manufacturers apply these standards, it is presumed that they will also comply with the specific requirements of the European directives. The regulatory authorities would therefore need to prove that a manufacturer did not meet the legal requirements.

However, should a manufacturer deviate from the harmonised standards, he himself must prove how he has met the essential safety requirements. This is generally done via a hazard analysis. In practice one would endeavour to apply the harmonised standards, unless the products concerned are highly innovative and no harmonised standards yet exist. The standards for which this “presumption effect” applies can be researched in the Official Journal of the EU (e.g. on the Internet) (http://eur-lex.europa.eu/). Standards in Europe are subdivided into what are termed A, B, and C standards.

Risk assessment

Risk assessment

Under the terms of the Machinery Directive, a machine manufacturer must carry out a risk assessment in order to identify all the risks and hazards associated with his machine. He must then design and construct the machine to take account of his assessment. This requirement also applies to operators who act as manufacturers under the terms of the Machinery Directive. For example, this may occur with machines that are interlinked or for machinery that has been upgraded and substantially modified.

EN ISO 12100 contains “Principles for risk assessment” on machinery. These approaches can be called upon as part of a comprehensive analysis. EN ISO 13849-1 expands on EN ISO 12100 with regard to the assessment of safety-related parts of control systems.

The hazards emanating from a machine may be many and varied, so for example, it is necessary to consider not just mechanical hazards through crushing and shearing, but also thermal and electrical hazards and hazards from radiation. Risk reduction is therefore an iterative process, i.e. it is carried out before and during the planning phase and after completion of the plant or machine.

Pilz GmbH & Co. KG, Felix-Wankel-Straße 2, 73760 Ostfildern, Germany
Telephone: +49 711 3409-0, Telefax: +49 711 3409-133, E-Mail: pilz.gmbh@pilz.de

Risk assessment

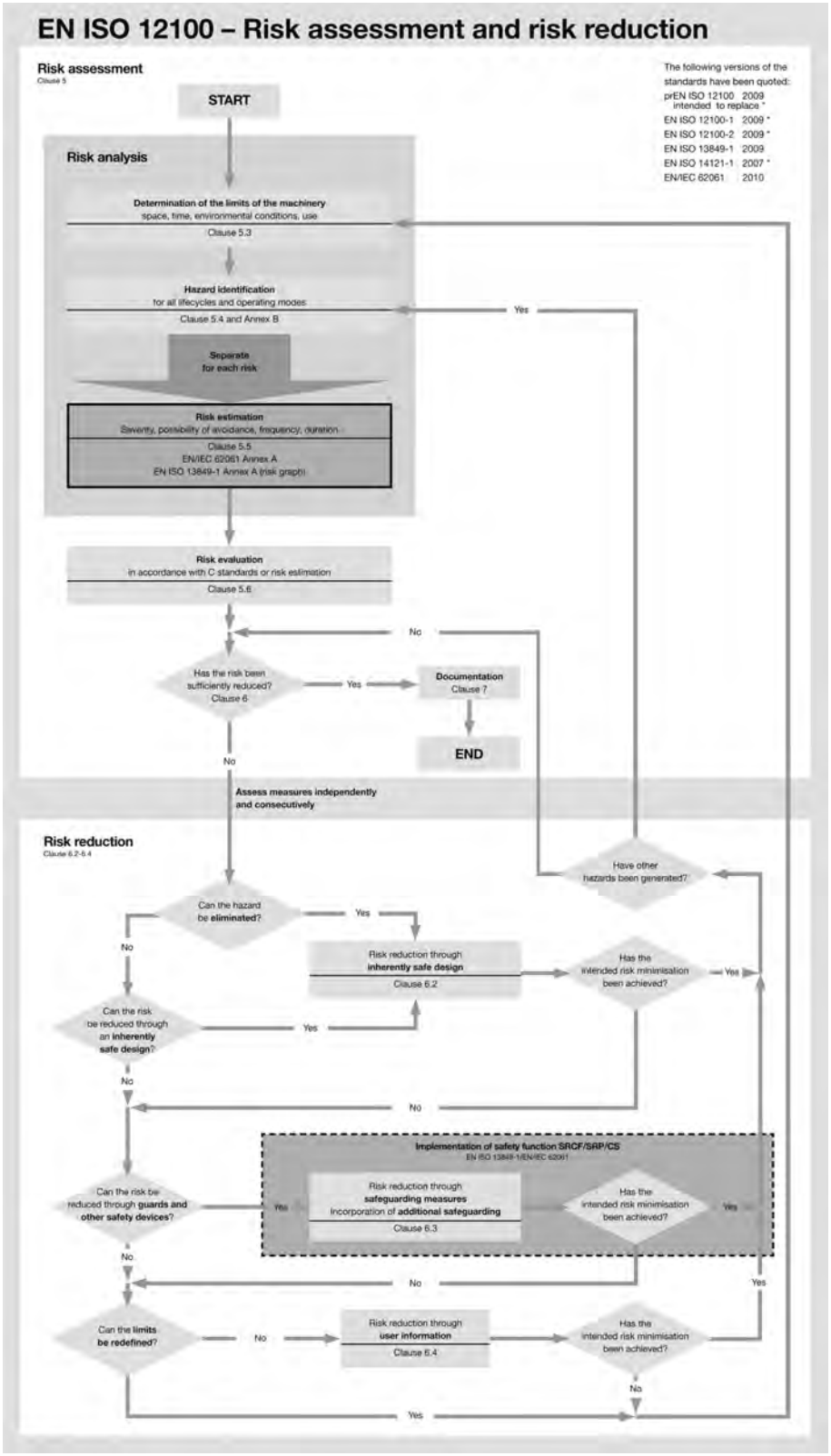

Iterative process in accordance with EN ISO 12100

Legal regulations outside Europe, and standards for functional safety

Legal regulations outside Europe

The situation is somewhat different in the USA: The legal basis in the USA can be viewed as a mix of product standards, fire codes (NFPA), electrical codes (NEC) and national laws. Local government bodies have the authority to monitor that these codes are being enforced and implemented. People there are mainly familiar with two types of standards: OSHA (Occupational Safety and Health Administration) and ANSI (American National Standards Institute). Government bodies publish OSHA standards and compliance is mandatory. OSHA standards are comparable with European directives, although OSHA is more concerned with describing technical property requirements than with abstract requirements.

ANSI standards, on the other hand, are developed by private organisations and their application is generally not absolutely essential. However, ANSI standards are still included in contracts and OSHA frequently adopts ANSI standards. You can also still come across the NFPA (National Fire Protection Association), which developed NFPA 79 as a counterpart to EN 60204-1, for example.

Russia and the CIS states have implemented GOST-R certification for some years now, in other words, technical devices that fall within a specific product area must undergo a certain certification process. Machinery and any corresponding technical accessories undergo a type approval test through a European notified body, for example. This test is generally recognised by a Russian-based approvals body. From the point of view of safety, the same requirements apply as in Europe.

China, on the other hand, has introduced CCC certification. Similar to the position in Russia, technical products are subject to mandatory certification through a national approvals body in China. In addition, production sites are inspected. If a technical device falls with the scope of the product list, which is subdivided into 19 categories, certification is mandatory, otherwise it will be necessary to supply a type of "declaration of no objection" from a national notified body.

Japan is currently in a transition period: The plan is for Japan to adopt the European "new approach" – in other words, to keep standards and legislation separate. At the moment the international ISO and IEC standards are being directly incorporated into national legislation, which is why people are currently confronted with frequent amendments to laws and lengthy implementation periods.

Standards for functional safety

Different standards may be called upon to observe functional safety on control systems, depending on the application. In the area of machine safety, EN ISO 13849-1 is the main standard named for safety-related control systems. Irrespective of the technology, this applies for the whole chain from the sensor to the actuator. The risk estimation can be used to assess the risk potential for danger zones on machinery. The category is then established without the use of risk-reducing measures.

Pilz GmbH & Co. KG, Felix-Wankel-Straße 2, 73760 Ostfildern, Germany
Telephone: +49 711 3409-0, Telefax: +49 711 3409-133, E-Mail: pilz.gmbh@pilz.de

Safety-related parts of control systems - General principles for design in accordance with EN ISO 13849-1

Determination of the required Performance Level (PL_r)

- **S – Severity of injury**
  - S_1 = Slight (normally reversible injury)
  - S_2 = Serious (normally irreversible injury, including death)
- **F – Frequency and/or exposure to a hazard**
  - F_1 = Seldom to less often and/or the exposure time is short
  - F_2 = Frequent to continuous and/or the exposure time is long
- **P – Possibility of avoiding the hazard or limiting the harm**
  - P_1 = Possible under specific conditions
  - P_2 = Scarcely possible

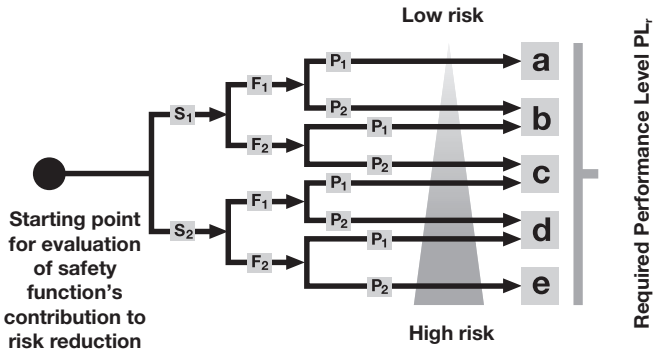

Safety-related parts of control systems – General principles for design in accordance with EN ISO 13849-1

As the successor standard to EN 954-1, EN ISO 13849-1 is based on the familiar categories. Equally, it examines complete safety functions, including all the components involved in their design. EN ISO 13849-1 goes beyond the qualitative approach of EN 954-1 to include a quantitative assessment of the safety functions. A performance level (PL) is used for this, building upon the categories.

Components/devices require the following safety parameters, depending on the device type:

Complex devices:
- PL: Performance Level
- Cat: Category
- T_M: Mission time

Simple devices:
- $MTTF_d$

Simple devices on which wear is based on operations:
- $B10_d$

The standard describes how to calculate the performance level (PL) for safety-related parts of control systems, based on designated architectures. EN ISO 13849-1 refers any deviations to IEC 61508. When calculating the performance level of a control solution it is advisable to use software tools such as PAScal (WEBLINK), as they simplify the mathematical methods described in the standards considerably.

Risk assessment in accordance with EN ISO 13849-1

Risk assessment is an iterative process, i.e. it will need to be carried out more than once. The risk must be estimated and the performance level defined for each hazard on which the risk is to be reduced through control measures. The risk is estimated through consideration of the severity of injury (S), the frequency and duration of exposure to the hazard (F) and the possibility of avoiding or limiting the harm (P).

Parameters S, F and P are used on the risk graph to determine the required performance level (PL_r) for a safety function.

Functional safety and legal position of EN/IEC 61508

Functional safety with EN/IEC 61508?

EN/IEC 61508 is regarded as a generic safety standard, which deals with the functional safety of electrical, electronic and programmable electronic systems, irrespective of the application.

One of the main tasks of EN/IEC 61508 is to serve as a basis for the development of application-oriented standards. Standards' committees are currently busy in the areas of machine safety with EN/IEC 62061, and process safety with EN/IEC 61511.

These sector-specific standards are intended to continue the principle approaches of EN/IEC 61508 and to implement the requirements for the relevant application area in a suitably practical manner.

What is the legal status of EN/IEC 61508?

As EN/IEC 61508 is not listed in the Official Journal of the European Communities for implementation as a European directive, it lacks the so-called “presumption effect”: so if the standard is used on its own, a control system designer cannot presume that the relevant requirements of the specific European directive have been met.

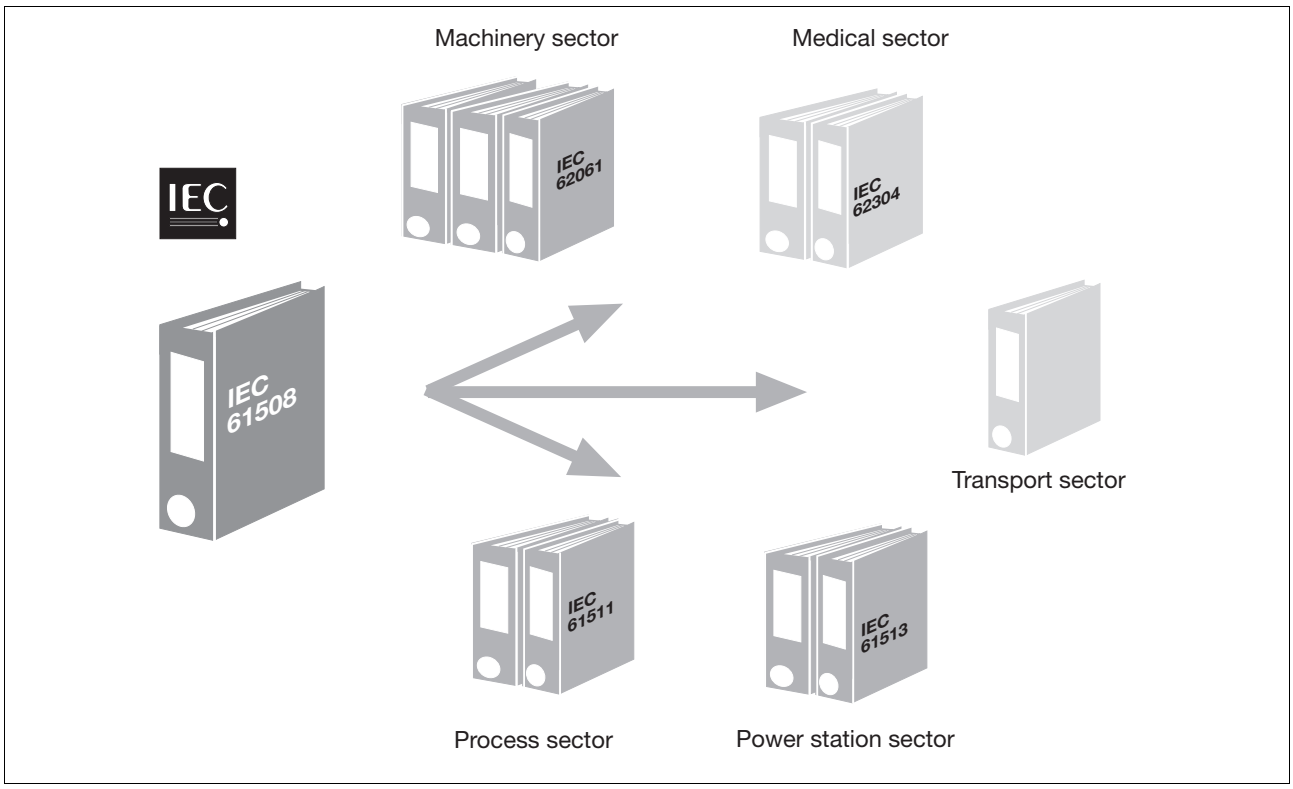

Sector standards from EN/IEC 61508

Pilz GmbH & Co. KG, Felix-Wankel-Straße 2, 73760 Ostfildern, Germany
Telephone: +49 711 3409-0, Telefax: +49 711 3409-133, E-Mail: pilz.gmbh@pilz.de

Functional safety in accordance with EN/IEC 62061

Risk assessment and determination of required Safety Integrity Level (SIL)

Consequences	S	Class Cl 3-4	5-7	8-10	11-13	14-15	Frequency and duration	Fr	Probability of hzd. event	Pr	Avoidance	P
Death, losing an eye or arm	4	SIL 2	SIL 2	SIL 2	SIL 3	SIL 3	≤ 1 hour	5	Very high	5		
Permanent, losing fingers	3		OM	SIL 1	SIL 2	SIL 3	> 1 h – ≤ 1 day	5	Likely	4		
Reversible, medical attention	2			OM	SIL 1	SIL 2	> 1 day – ≤ 2 wks	4	Possible	3	Impossible	5
Reversible, first aid	1				OM	SIL 1	> 2 wks – ≤ 1 year	3	Rarely	2	Possible	3
							> 1 year	2	Negligible	1	Likely	1

☐ AM = Other measures recommended

Functional safety of safety-related electrical, electronic and programmable electronic control systems in accordance with EN/IEC 62061

EN/IEC 62061 represents a sector-specific standard under EN/IEC 61508. It describes the implementation of safety-related electrical control systems on machinery and examines the overall lifecycle from the concept phase through to decommissioning. Quantitative and qualitative examinations of the safety functions form the basis.

Risk estimation is an iterative process, i.e. it will need to be carried out more than once. The risk must be assessed and the SIL defined for each hazard on which the risk is to be reduced through control measures. The risk is estimated through consideration of the severity of injury (Se), the frequency and duration of exposure to the hazard (Fr), probability of occurrence of a hazardous event (Pr) and the possibility of avoiding or limiting the harm (Av).

The required SIL is assigned using the table above, where Cl = Fr + Pr + Av.

When calculating the SIL of a control solution it is advisable to use software tools such as PAScal (WEBLINK), as already mentioned under EN ISO 13849-1. These simplify the application of the mathematical methods described in the standards considerably.

Pilz GmbH & Co. KG, Felix-Wankel-Straße 2, 73760 Ostfildern, Germany
Telephone: +49 711 3409-0, Telefax: +49 711 3409-133, E-Mail: pilz.gmbh@pilz.de

Contents		Page
Service		
Pre-sales/after sales		
	Professional services	5.1-2
Business terms and conditions		
	Terms of delivery and payment	5.1-3

Pre-sales/after sales
Professional services



We can provide consulting and engineering, training and support, from the project configuration phase through to commissioning.

Risk analysis
Assessment of the hazards and risks on plant and machinery, based on norms and standards.

Safety concept
Based on the risk assessment, appropriate protective measures can be selected and a safety concept drawn up.

Safety design
As part of the safety design, Pilz produces detailed documentation regarding the implementation, taking into account the safety concept.

System implementation
Pilz undertakes all the tasks required to implement a project: component selection, preparation of circuit diagrams, programming, control cabinet, installation, commissioning.

Safety validation
All the relevant safety-related documents are examined, check lists are created and the plant and machinery checked.

CE Services
Co-ordination and implementation of all the activities necessary for the "CE conformity" of plant and machinery.

Plant assessment
Analysis and assessment of the safety-related condition of your plant and machinery. Proposal of basic recommendations for improvement.

Hazard assessment in accordance with BetrSichV
Identification and assessment of work processes and work equipment and development of custom-fit solutions.

Inspection of safeguards
Regular inspection of safeguards (for example light barriers, safety gate systems, etc.) are essential. The scope and schedule of these inspections are defined in various national directives and laws.

International conformity assessment
Pilz develops the necessary strategies to enable compliance with the respective ISO, IEC and ANSI standards or any other standards.

Training and education
A wide range of seminars and training courses on machinery safety helps to communicate the fundamentals for minimising risk and assuring your success.

Technical Support
Our engineers can support you in the selection, use and application of our products. They are in constant contact with customers from the widest range of areas and industrial sectors and are happy to answer your queries at any time.

Supply and repair service
From a fast, economical repair through to a long supply guarantee to safeguard your investment - always expect more from Pilz.

Certificates and approvals
Pilz is certified to DIN ISO 9001. International approvals and certification from recognised test houses confirm our products' suitability for worldwide use.

Internet
Our homepage at www.pilz.com provides the latest information, electronic shopping, direct dialogue and enquiry functions as well as extensive download options.

E-Business
The focus of Pilz's E-Business activities is to strengthen customer orientation through the use of new media and to increase added value via a supplementary business model for Business-to-Business.

Worldwide representatives
Our worldwide network of subsidiaries and sales partners ensures comprehensive support and assistance with your questions and problems.

DAkkS
Deutsche Akkreditierungsstelle
D-IS-12033-01-01

DAkkS:
Pilz GmbH & Co. KG operates an independent inspection body in accordance with DIN EN ISO/IEC 17020:2004 for the plant and machinery sector, accredited by the German Accreditation Body (DAkkS).

You can reach our international hotline on: +49 711 3409-444, e-mail: support@pilz.com

Pilz GmbH & Co. KG, Felix-Wankel-Straße 2, 73760 Ostfildern, Germany
Telephone: +49 711 3409-0, Telefax: +49 711 3409-133, E-Mail: pilz.gmbh@pilz.de

Business terms and conditions
Terms of delivery and payment



The terms of delivery and of payment of the respective Pilz company with whom a sales contract is closed are applied. As a rule this is the Pilz company that places the order. Please select the legal contract partner from the order confirmation.

AT
Pilz Ges.m.b.H.
Sichere Automation
Modecenterstraße 14
1030 Wien
Austria
Telephone: +43 1 7986263-0
Telefax: +43 1 7986264
E-Mail: pilz@pilz.at
Internet: www.pilz.at

AU
Pilz Australia
Safe Automation
Unit D7, Hallmarc Business park Clayton
Corner of Westall and Centre roads
Clayton, Melbourne, Victoria 3168
Australia
Telephone: +61 3 95446300
Telefax: +61 3 95446311
E-Mail: safety@pilz.com.au
Internet: www.pilz.com.au

BE L U
Pilz Belgium
Safe Automation
Bijenstraat 4
9051 Gent (Sint-Denijs-Westrem)
Belgium
Telephone: +32 9 3217570
Telefax: +32 9 3217571
E-Mail: info@pilz.be
Internet: www.pilz.be

BR
Pilz do Brasil
Automação Segura
Av. Senador Vergueiro, 347 - Centro
CEP: 09750-000
São Bernardo do Campo - SP
Brazil
Telephone: +55 11 4126-7290
Telefax: +55 11 4126-7291
E-Mail: pilz@pilz.com.br
Internet: www.pilz.com.br

CH
Pilz Industrieelektronik GmbH
Gewerbepark Hintermättli
Postfach 6
5506 Mägenwil
Switzerland
Telephone: +41 62 88979-30
Telefax: +41 62 88979-40
E-Mail: pilz@pilz.ch
Internet: www.pilz.ch

CN
Pilz Industrial Automation
Trading (Shanghai) Co., Ltd.
Rm. 1702-1704
Yongda International Tower
No. 2277 Long Yang Road
Shanghai 201204
China
Telephone: +86 21 60880878
Telefax: +86 21 60880870
E-Mail: sales@pilz.com.cn
Internet: www.pilz.com.cn

DE
Pilz GmbH & Co. KG
Felix-Wankel-Straße 2
73760 Ostfildern
Germany
Telephone: +49 711 3409-0
Telefax: +49 711 3409-133
E-Mail: pilz.gmbh@pilz.de
Internet: www.pilz.de

DK
Pilz Skandinavien K/S
Safe Automation
Ellegaardvej 25 L
6400 Sonderborg
Denmark
Telephone: +45 74436332
Telefax: +45 74436342
E-Mail: pilz@pilz.dk
Internet: www.pilz.dk

ES
Pilz Industrieelektronik S.L.
Safe Automation
Camí Ral, 130
Polígono Industrial Palou Nord
08401 Granollers
Spain
Telephone: +34 938497433
Telefax: +34 938497544
E-Mail: pilz@pilz.es
Internet: www.pilz.es

FI
Pilz Skandinavien K/S
Safe Automation
Nuijamiestentie 7
00400 Helsinki
Finland
Telephone: +358 10 3224030
Telefax: +358 9 27093709
E-Mail: pilz.fi @pilz.dk
Internet: www.pilz.fi

FR
Pilz France Electronic
1, rue Jacob Mayer
BP 12
67037 Strasbourg Cedex 2
France
Telephone: +33 3 88104000
Telefax: +33 3 88108000
E-Mail: siege@pilz-france.fr
Internet: www.pilz.fr

GB
Pilz Automation Technology
Safe Automation
Willow House, Medlicott Close
Oakley Hay Business Park
Corby
Northants NN18 9NF
United Kingdom
Telephone: +44 1536 460766
Telefax: +44 1536 460866
E-Mail: sales@pilz.co.uk
Internet: www.pilz.co.uk

IE
Pilz Ireland Industrial Automation
Cork Business and Technology Park
Model Farm Road
Cork
Ireland
Telephone: +353 21 4346535
Telefax: +353 21 4804994
E-Mail: sales@pilz.ie
Internet: www.pilz.ie

IN
Pilz India Pvt Ltd
Office No 202, Delite Square
Near Aranyeshwar Temple
Sahakar Nagar No 1
Pune 411009
India
Telephone: +91 20 2421399-4/-5
Telefax: +91 20 2421399-6
E-Mail: info@pilz.in
Internet: www.pilz.in

IT
Pilz Italia Srl
Automazione sicura
Via Meda 2/A
22060 Novedrate (CO)
Italy
Telephone: +39 031 789511
Telefax: +39 031 789555
E-Mail: info@pilz.it
Internet: www.pilz.it

JP
Pilz Japan Co., Ltd.
Safe Automation
BENEX S-2 4F
3-17-5 Shin-Yokohama
Kohoku-ku
222-0033 Yokohama
Japan
Telephone: +81 45 471-2281
Telefax: +81 45 471-2283
E-Mail: pilz@pilz.co.jp
Internet: www.pilz.jp

KR
Pilz Korea Ltd.
Safe Automation
9F Jo-Yang Bld. 50-10
Chungmuro2-Ga Jung-Gu
100-861 Seoul
South Korea
Telephone: +82 2 2263 9541
Telefax: +82 2 2263 9542
E-Mail: info@pilzkor ea.co.kr
Internet: www.pilzkorea.co.kr

MX
Pilz de México, S. de R.L. de C.V.
Automatización Segura
Convento de Actopan 36
Jardines de Santa Mónica
Tlalnepantla, Méx. 54050
Mexico
Telephone: +52 55 5572 1300
Telefax: +52 55 5572 1300
E-Mail: info@pilz.com.mx
Internet: www .pilz.mx

NL
Pilz Nederland
Veilige automatisering
Postbus 186
4130 ED Vianen
Netherlands
Telephone: +31 347 320477
Telefax: +31 347 320485
E-Mail: info@pilz.nl
Internet: www.pilz.nl

NZ
Pilz New Zealand
Safe Automation
Unit 4, 12 Laidlaw Way
East Tamaki
Auckland 2016
New Zealand
Telephone: +64 9 6345350
Telefax: +64 9 6345352
E-Mail: offi ce@pilz.co.nz
Internet: www.pilz.co.nz

...
In many countries we are represented by sales partners.

Please refer to our homepage for further details or contact our headquarters.

PL
Pilz Polska Sp. z o.o.
Safe Automation
ul. Ruchliwa 15
02-182 Warszawa
Poland
Telephone: +48 22 8847100
Telefax: +48 22 8847109
E-Mail: info@pilz.pl
Internet: www.pilz.pl

PT
Pilz Industrieelektronik S.L.
R. Eng Duarte Pacheco, 120
4 Andar Sala 21
4470-174 Maia
Portugal
Telephone: +351 229407594
Telefax: +351 229407595
E-Mail: pilz@pilz.pt
Internet: www.pilz.pt

RU
Pilz RUS OOO
Ugreshskaya street, 2,
bldg. 11, office 16 (1st floor)
115088 Moscow
Russian Federation
Telephone: +7 495 665 4993
E-Mail: pilz@pilzrussia.ru
Internet: www.pilzrussia.ru

SE
Pilz Skandinavien K/S
Safe Automation
Energigatan 10 B
43437 Kungsbacka
Sweden
Telephone: +46 300 13990
Telefax: +46 300 30740
E-Mail: pilz.se@pilz.dk
Internet: www.pilz.se

TR
Pilz Emniyet Otomasyon
Ürünleri ve Hizmetleri Tic. Ltd. Şti.
Kayışdağı Cd. Beykonağı Plaza
No:130 K:2 D:2
Ataşehir/İstanbul
Turkey
Telephone: +90 216 5775550
Telefax: +90 216 5775549
E-Mail: info@pilz.com.tr
Internet: www.pilz.com.tr

US C A
Pilz Automation Safety L.P.
7150 Commerce Boulevard
Canton
Michigan 48187
USA
Telephone: +1 734 354 0272
Telefax: +1 734 354 3355
E-Mail: info@pilzusa.com
Internet: www.pilz.us

T echnical support
+49 711 3409-444
support@pilz.com

Pilz GmbH & Co. KG
Felix-Wankel-Straße 2
73760 Ostfildern, Germany
Telephone: +49 711 3409-0
Telefax: +49 711 3409-133
E-Mail: pilz.gmbh@pilz.de
Internet: www .pilz.com

1002173-EN-05
2-1-2-3-010, 2013-04 Printed in Germany
© Pilz GmbH & Co. KG, 2012

InduraNET p®, Plz®, PIT®, PMCprotego®, PMI®, PNOZ®, Primo®, PSEN®, PSS®, PVIS®, SafetyBUS p®, SafetyEYE®, SafetyNET p®, the spirit of safety® are registered and protected trademarks of Pilz GmbH & Co. KG in some countries. We would point out that product features may vary from the details stated in this document, depending on the status at the time of publication and the scope of the equipment. We accept no responsibility for the validity, accuracy and entirety of the text and graphics presented in this information. Please contact our Technical Support if you have any questions.