SOUTHCO® A1-500 SERIES ADJUSTABLE DRAW LATCH

DATE	DRAWN	CHKD	SCALE	DRAWING NUMBER
24MAR94	JGK		1 : 1	J-A1-10-501-40-M

REV.	DATE	BY-CHKD	REVISIONS
A	23JULY96	GDM	PRN: A1-132

ITEM	PART No.	MATERIAL	FINISH
ASSEMBLY	A1-10-501-40	———	———
LATCH	———	NOTE A	PASSIVATED
KEEPER	———	17-7PH S/S	PASSIVATED

FOR A LATCH WITH A YELLOW VINYL GRIP ON THE HANDLE END, CHANGE THE EIGHTH DIGIT OF THE PART No. TO 5.
EXAMPLE: A1-10-501-50

PANEL PREPARATION

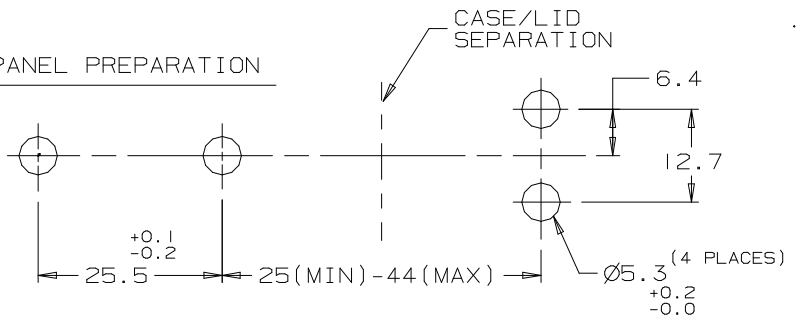

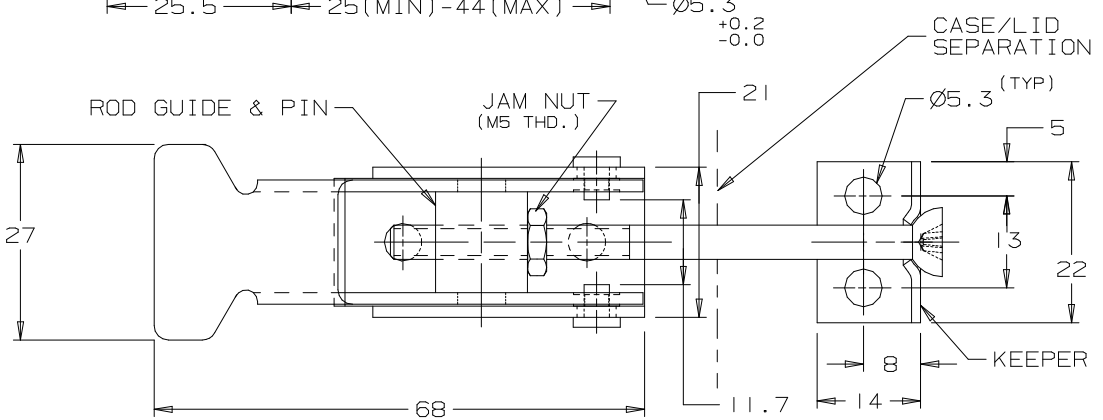

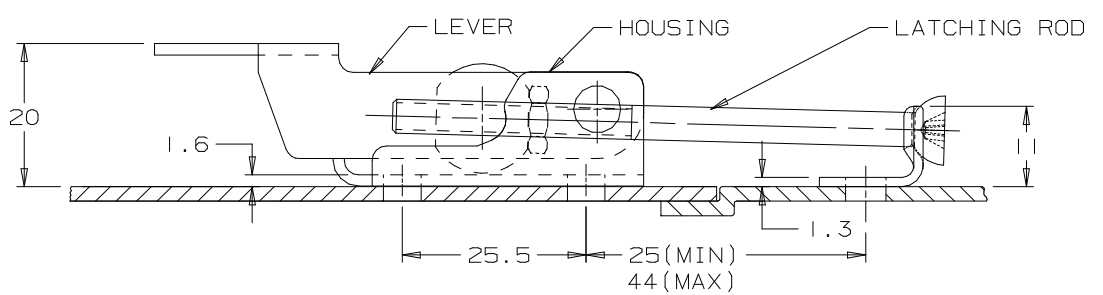

TO ADJUST FOR LATCHING TENSION OR GASKET COMPRESSION

1. WITH LATCH IN CLOSED POSITION, ADJUST THREADED ROD USING A No.2 PHILLIPS SCREW DRIVER TO OBTAIN DESIRED LATCHING TENSION OR GASKET COMPRESSION.
2. OPERATE LATCH THROUGH UNLATCHING AND LATCHING SEQUENCE TO INSURE DESIRED ADJUSTMENT.
3. WITH FASTENER OPENED AND LEVER PERPENDICULAR TO ROD, TIGHTEN JAM NUT AGAINST ROD GUIDE, WHILE USING A PHILLIPS SCREWDRIVER TO PREVENT ROD FROM TURNING, TO LOCK ROD IN POSITION.

TO MOUNT LATCH

1. CHOOSE MOUNTING DISTANCE BETWEEN THE LATCH AND THE KEEPER WITHIN THE RANGE SPECIFIED .
2. LOCATE YOUR MOUNTING HOLES IN THE DESIRED LOCATIONS WITH RESPECT TO THE MOUNTING SURFACES.
3. MOUNT LATCH AND KEEPER USING M5 SCREWS OR RIVETS.

MATERIAL and FINISH

NOTE A:

LEVER, HOUSING - 304 STAINLESS STEEL
JAM NUT, ROD GUIDE & PIN - 300 SERIES STAINLESS STEEL
ROD, RIVETS - 302 STAINLESS STEEL

FORMATA 3/88

PROPRIETARY ITEM - EXCEPT FOR USES EXPRESSLY GRANTED IN WRITING INFORMATION DISCLOSED HEREON IS CONFIDENTIAL AND ALL RIGHTS PATENT AND OTHERWISE ARE RESERVED BY SOUTHCO, INC.

ALL DIMENSIONS ARE IN MILLIMETERS.
ALL DIMENSIONS WITHOUT TOLERANCES ARE REFERENCE.
THIRD ANGLE PROJECTION DRAWING.

DRAWING NUMBER
J-A1-10-501-40-M