# KQ6003

## Capacitive sensor

KQ-3120NFAKG/2T/0,04M/AS

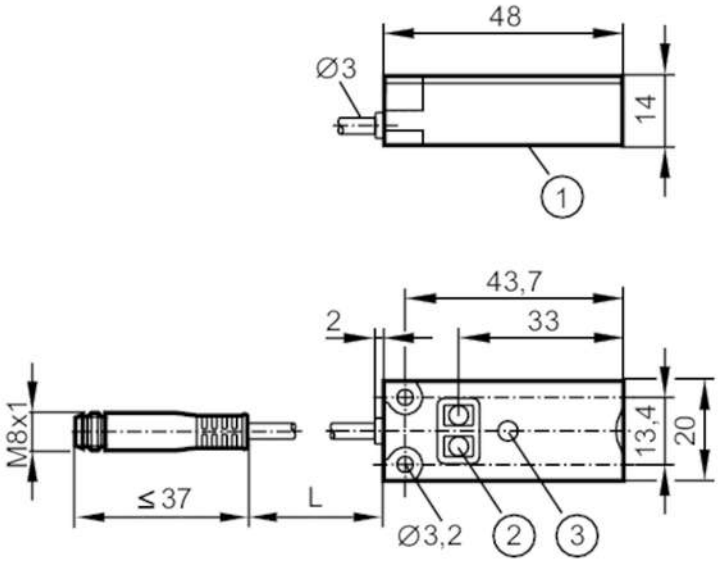


1 Sensing face
2 programming buttons
3 LED

| | | |
|---|---|---|
| **Product characteristics** | | |
| Electrical design | | PNP/NPN; (automatic load detection PNP/NPN) |
| Output function | | normally open / normally closed; (selectable) |
| Sensing range | [mm] | 12 |
| Communication interface | | IO-Link |
| Housing | | rectangular |
| Dimensions | [mm] | 20 x 14 x 48 |
| **Application** | | |
| Installation | | detection through non-metallic container wall or on bypass pipes |
| Media | | dry bulk material; liquids |
| **Electrical data** | | |
| Operating voltage | [V] | 10...30 DC |
| Current consumption | [mA] | < 17 |
| Protection class | | III |
| Reverse polarity protection | | yes |
| Measuring principle | | capacitive |
| **Outputs** | | |
| Electrical design | | PNP/NPN; (automatic load detection PNP/NPN) |
| Output function | | normally open / normally closed; (selectable) |
| Max. voltage drop switching output DC | [V] | 2.5 |
| Permanent current rating of switching output DC | [mA] | 100 |
| Switching frequency DC | [Hz] | 10 |
| Short-circuit protection | | yes |

# KQ6003

## Capacitive sensor

KQ-3120NFAKG/2T/0,04M/AS

| | | | |
|---|---|---|---|
| Type of short-circuit protection | | pulsed | |
| Overload protection | | yes | |
| **Detection zone** | | | |
| Sensing range | [mm] | 12 | |
| Real sensing range Sr | [mm] | 12 ± 10 % | |
| **Accuracy / deviations** | | | |
| Hysteresis | [% of Sr] | 1...15 | |
| Switch point drift | [% of Sr] | -20...20 | |
| **Interfaces** | | | |
| Communication interface | | IO-Link | |
| Transmission type | | COM1 (4,8 kBaud) | |
| IO-Link revision | | 1.1 | |
| SDCI standard | | IEC 61131-9 CDV | |
| Profiles | | Smart Sensor | |
| SIO mode | | yes | |
| Min. process cycle time | [ms] | 100.8 | |
| Supported DeviceIDs | | Type of operation | DeviceID |
| | | Default | 371 |
| **Operating conditions** | | | |
| Ambient temperature | [°C] | -25...80 | |
| Protection | | IP 65; IP 67; IP 69K | |
| **Tests / approvals** | | | |
| EMC | | EN 61000-4-2 ESD | 8 kV AD |
| | | EN 61000-4-3 HF radiated | 10 V/m |
| | | EN 61000-4-4 Burst | 2 kV |
| | | EN 61000-4-6 HF conducted | 3 V |
| | | EN 55011 | class B |
| Shock resistance | | EN 60068-2-27 | 30 g 6 shocks / 11 ms half-sine (x, y, z) |
| Vibration resistance | | EN 60068-2-6 | (10...55 Hz) / 1 mm amplitude, oscillation period 5 min., 30 min. per axis at resonance or 55 Hz |
| MTTF | [years] | 623 | |
| UL approval | | Ta | -25...80 °C |
| | | Enclosure type | Type 1 |
| | | power supply | Limited Voltage/Current |
| **Mechanical data** | | | |
| Weight | [g] | 25.2 | |
| Housing | | rectangular | |
| Mounting | | non-flush mountable | |
| Dimensions | [mm] | 20 x 14 x 48 | |
| Materials | | housing: PBT glass fibre reinforced; pushbuttons: TPE-U; cover: PC glass fibre reinforced | |
| **Displays / operating elements** | | | |
| Display | | switching status | 1 x LED, yellow |
| Teach function | | yes | |

# KQ6003

## Capacitive sensor

**KQ-3120NFAKG/2T/0,04M/AS**

| | |
|---|---|
| Electronic lock | yes |

**Remarks**

| | |
|---|---|
| Pack quantity | 1 pcs. |

**Electrical connection - plug**

Cable: 0.04 m, PVC; 3 x 0.14 mm²

Connector: 1 x M8; coding: A




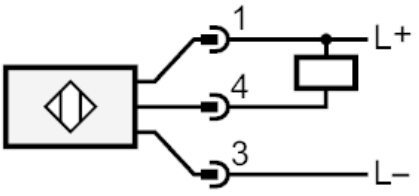


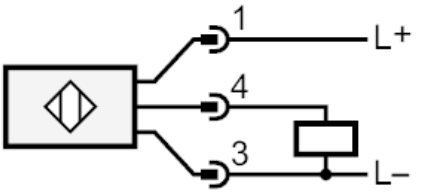


| | |
|---|---|
| 4: | OUT / IO-Link<br>automatic load detection PNP/NPN<br>when using a resistive load < 20 kΩ |