# MK501A

## T-slot cylinder sensor

MKT3028BBPKG/G/0,3M/ZH/US/3D

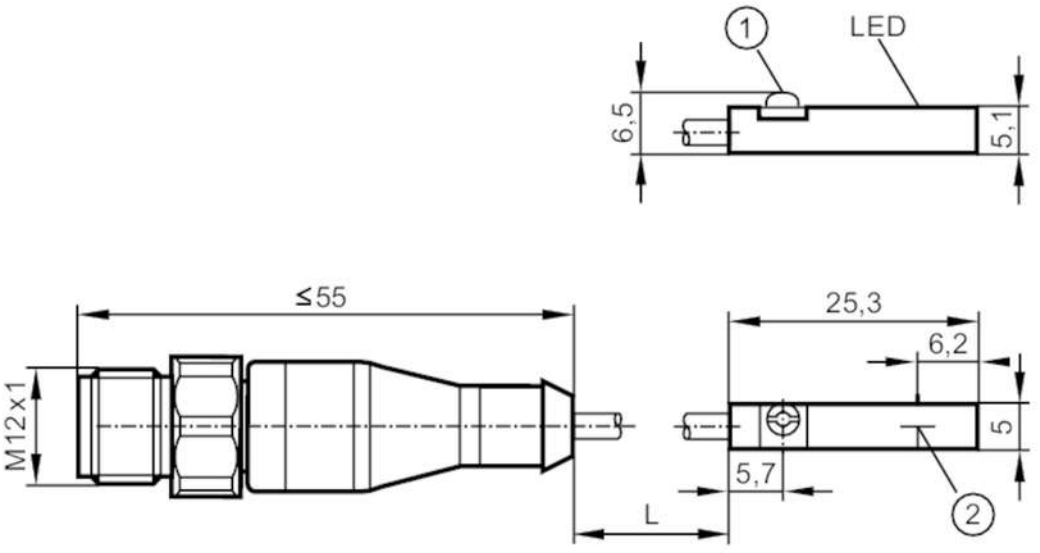


1 fastening clamp
2 Sensing face

| | | |
|---|---|---|
| **Product characteristics** | | |
| Electrical design | | PNP |
| Output function | | normally open |
| Dimensions | [mm] | 25 x 5 x 6.5 |
| **Electrical data** | | |
| Operating voltage | [V] | 10...30 DC |
| Current consumption | [mA] | < 10 |
| Protection class | | III |
| Reverse polarity protection | | yes |
| Max. power-on delay time | [ms] | 30 |
| **Outputs** | | |
| Electrical design | | PNP |
| Output function | | normally open |
| Max. voltage drop switching output DC | [V] | 2.5 |
| Permanent current rating of switching output DC | [mA] | 100 |
| Switching frequency DC | [Hz] | 10000 |
| Short-circuit protection | | yes |
| Overload protection | | yes |
| **Detection zone** | | |
| Response sensitivity | [mT] | 2.8 |
| Travel speed | [m/s] | > 10 |
| **Accuracy / deviations** | | |
| Hysteresis | [mm] | < 1.5 |

# MK501A

## T-slot cylinder sensor

MKT3028BBPKG/G/0,3M/ZH/US/3D

| | | | |
|---|---|---|---|
| Repeatability | [mm] | < 0.2 | |
| **Operating conditions** | | | |
| Ambient temperature | [°C] | -25...60 | |
| Protection | | IP 65; IP 67 | |
| **Tests / approvals** | | | |
| ATEX marking | | II 3D Ex tc IIIC T125°C Dc X | |
| EMC | | EN 61000-4-2 ESD | - CD / 8 kV AD |
| | | EN 61000-4-3 HF radiated | 10 V/m |
| | | EN 61000-4-4 Burst | 2 kV |
| | | EN 61000-4-6 HF conducted | 10 V |
| | | EN 55011 | class B |
| MTTF | [years] | 3694 | |
| **Mechanical data** | | | |
| Weight | [g] | 52.4 | |
| Mounting | | flush mountable | |
| Type of mounting | | fastening clamp with combined slot / hexagon socket, width across flats 1.5 | |
| Cylinder type | | T-slot cylinders;  (adapters allow mounting to different cylinder types) | |
| Dimensions | [mm] | 25 x 5 x 6.5 | |
| Materials | | PA; stainless steel | |
| **Displays / operating elements** | | | |
| Display | | switching status | 1 x LED, yellow |
| **Accessories** | | | |
| Items supplied | | rubber placeholder: 1 | |
| | | Cable clip: 1 | |
| | | Protective cover: 1 x T-Nut, E12259 | |
| **Remarks** | | | |
| Pack quantity | | 1 pcs. | |

**Electrical connection - plug**

Cable: 0.3 m, PUR

Connector: 1 x M12; coding: A; Locking: Hexagon nut, rotatable, stainless steel



# MK501A

## T-slot cylinder sensor

**MKT3028BBPKG/G/0,3M/ZH/US/3D**

### Connection

