11B630100000380

THREE-POLE CONTACTOR, IEC OPERATING CURRENT ITH (AC1) = 1000A, AC/DC COIL, 380...415VAC/DC



Product designation			Power contactor
Product type designation			B6301000
Contact characteristics			
Number of poles		Nr.	3
Rated insulation voltage Ui IEC/EN		V	1000
Rated impulse withstand voltage Uimp		kV	8
Operational frequency			
	min	Hz	25
	max	Hz	400
IEC Conventional free air thermal current Ith		A	1000
Operational current Ie			
	AC-1 (≤40°C)	A	1000
	AC-1 (≤55°C)	A	850
	AC-1 (≤70°C)	A	700
	AC-4 (400V)	A	260
Rated operational power AC-1 (T≤40°C)			
	230V	kW	350
	400V	kW	600
	500V	kW	750
	690V	kW	1000
IEC max current Ie in DC1 with L/R ≤ 1ms with 1 poles in series			
	75V	A	800
	110V	A	460
	220V	A	--
	330V	A	--
	460V	A	--
IEC max current Ie in DC1 with L/R ≤ 1ms with 2 poles in series			
	75V	A	800
	110V	A	800
	220V	A	700
	330V	A	--
	460V	A	--
IEC max current Ie in DC1 with L/R ≤ 1ms with 3 poles in series			
	75V	A	800
	110V	A	800
	220V	A	800
	330V	A	700
	460V	A	--
IEC max current Ie in DC1 with L/R ≤ 1ms with 4 poles in series			
	75V	A	800
	110V	A	800
	220V	A	800
	330V	A	750
	460V	A	700
IEC max current Ie in DC3-DC5 with L/R ≤ 15ms with 1 poles in series			

The characteristics described in this document are subject to updates or modifications at any time. The descriptions, technical and functional information, illustrations and instructions in this brochure are purely illustrative, and are consequently not contractually binding

	75V	A	800
	110V	A	460
	220V	A	--
	330V	A	--
	460V	A	--
IEC max current Ie in DC3-DC5 with L/R ≤ 15ms with 2 poles in series			
	75V	A	800
	110V	A	800
	220V	A	700
	330V	A	--
	460V	A	--
IEC max current Ie in DC3-DC5 with L/R ≤ 15ms with 3 poles in series			
	75V	A	800
	110V	A	800
	220V	A	800
	330V	A	650
	460V	A	--
IEC max current Ie in DC3-DC5 with L/R ≤ 15ms with 4 poles in series			
	75V	A	800
	110V	A	800
	220V	A	800
	330V	A	650
	460V	A	700
Short-time allowable current for 10s (IEC/EN60947-1)		A	5600
Protection fuse			
	gG (IEC)	A	1000
Making capacity (RMS value)		A	6300
Breaking capacity at voltage			
	440V	A	6300
	500V	A	5600
	690V	A	5000
Resistance per pole (average value)		mΩ	0.14
Power dissipation per pole (average value)			
	Ith	W	140
	AC3	W	56
Tightening torque for terminals			
	min	Nm	55
	max	Nm	55
	min	lbin	40.6
	max	lbin	40.6
Tightening torque for coil terminal			
	min	Nm	1
	max	Nm	1
	min	lbin	0.74
	max	lbin	0.74
Max number of wires simultaneously connectable		Nr.	2
Conductor section			
AWG/Kcmil			
	max		2x 900 kcmil
Power terminal protection according to IEC/EN 60529			IP00
Mechanical features			
Operating position			
	normal		Vertical plan

The characteristics described in this document are subject to updates or modifications at any time. The descriptions, technical and functional information, illustrations and instructions in this brochure are purely illustrative, and are consequently not contractually binding

		allowable		±30°
Fixing				Screw
Weight			g	2154
Conductor section				
	AWG/kcmil conductor section			
		max		2x 900 kcmil
Operations				
Mechanical life			cycles	5000000
Electrical life			cycles	700000
Safety related data				
Performance level B10d according to EN/ISO 13489-1				
		rated load	cycles	700000
		mechanical load	cycles	5000000
Mirror contats according to IEC/EN 609474-4-1				yes
EMC compatibility				yes
AC coil operating				
Rated AC voltage at 50/60Hz, 60Hz				
		min	V	380
		max	V	415
AC operating voltage				
	of 50/60Hz coil powered at 50Hz			
	pick-up			
		min	%Us	80
		max	%Us	110
	drop-out			
		min	%Us	20
		max	%Us	60
	of 50/60Hz coil powered at 60Hz			
	pick-up			
		min	%Us	80
		max	%Us	110
	drop-out			
		min	%Us	20
		max	%Us	60
	of 60Hz coil powered at 60Hz			
	pick-up			
		min	%Us	80
		max	%Us	110
	drop-out			
		min	%Us	20
		max	%Us	60
AC average coil consumption at 20°C				
	of 50/60Hz coil powered at 50Hz			
		in-rush	VA	400
		holding	VA	18
	of 50/60Hz coil powered at 60Hz			
		in-rush	VA	400
		holding	VA	18
Dissipation at holding ≤20°C 50Hz			W	18
DC coil operating				
DC rated control voltage				
		min	V	380
		max	V	415

The characteristics described in this document are subject to updates or modifications at any time. The descriptions, technical and functional information, illustrations and instructions in this brochure are purely illustrative, and are consequently not contractually binding

DC operating voltage					
	pick-up				
			min	%Us	80
			max	%Us	110
	drop-out				
			min	%Us	20
			max	%Us	60
Average coil consumption ≤20°C					
			in-rush	W	400
			holding	W	18
Max cycles frequency					
Mechanical operation				cycles/h	1200
Operating times					
Average time for Us control					
	in AC				
		Closing NO			
			min	ms	110
			max	ms	180
		Opening NO			
			min	ms	60
			max	ms	100
	in DC				
		Closing NO			
			min	ms	110
			max	ms	180
		Opening NO			
			min	ms	60
			max	ms	100
UL technical data					
General USE					
	Contactor				
			AC current	A	1000
Short-circuit protection fuse, 600V					
	Standard fault				
			Short circuit current	kA	18
			Fuse rating	A	1500
			Fuse class		L
Ambient conditions					
Temperature					
	Operating temperature				
			min	°C	-50
			max	°C	70
	Storage temperature				
			min	°C	-60
			max	°C	80
Max altitude				m	3000
Resistance & Protection					
Pollution degree					3
Dimensions					

The characteristics described in this document are subject to updates or modifications at any time. The descriptions, technical and functional information, illustrations and instructions in this brochure are purely illustrative, and are consequently not contractually binding

11B630100000380

THREE-POLE CONTACTOR, IEC OPERATING CURRENT ITH (AC1) = 1000A, AC/DC COIL, 380...415VAC/DC

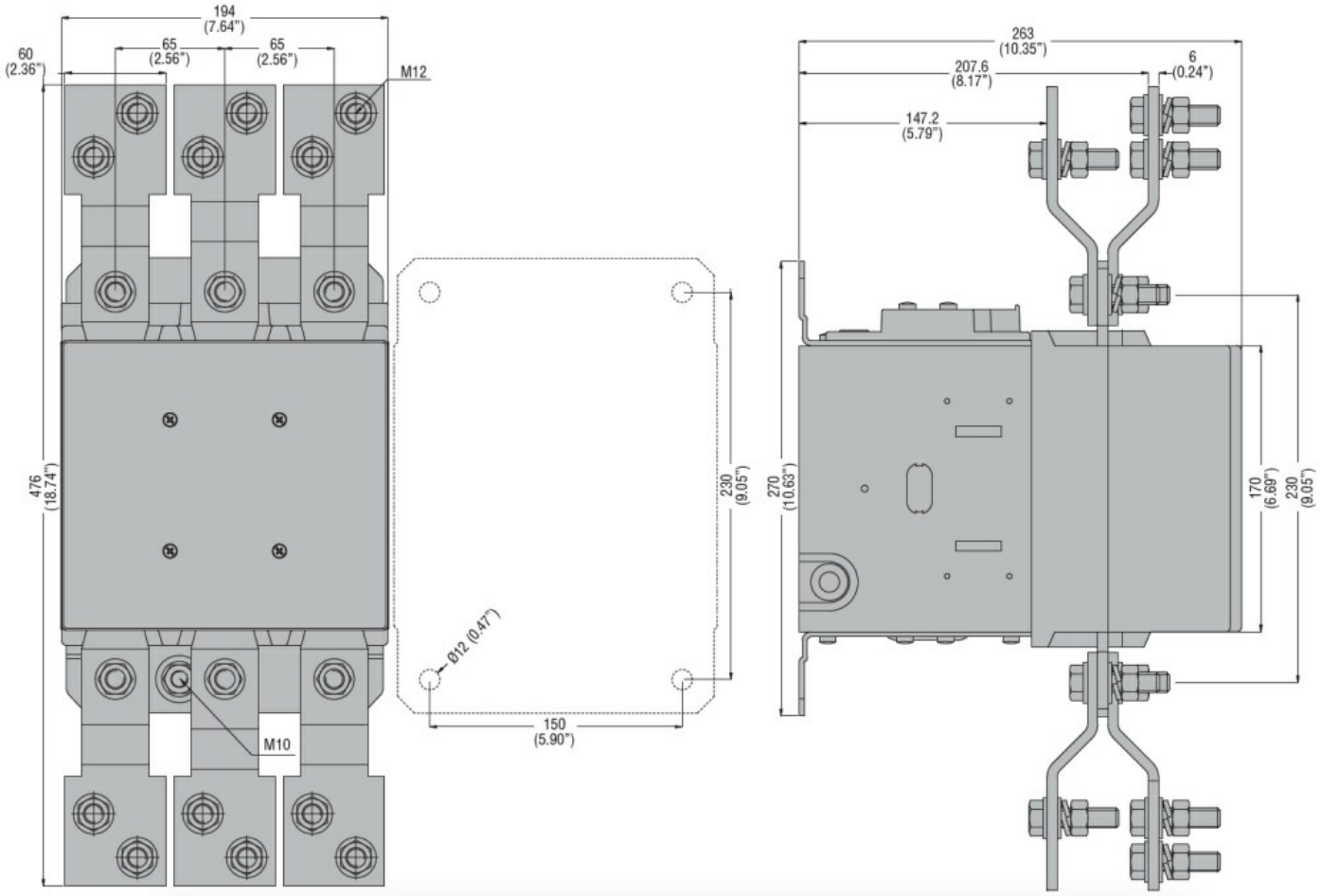

Wiring diagrams

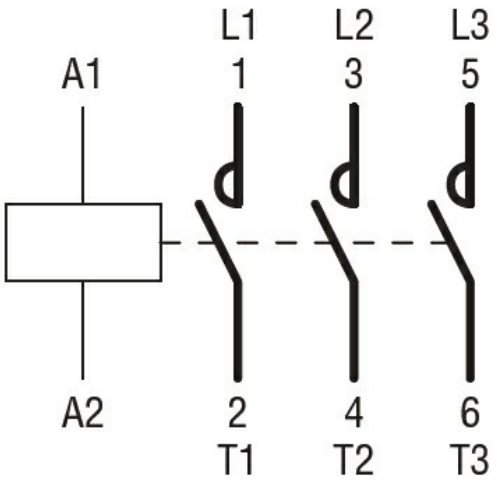

Certifications and compliance

Compliance

CSA C22.2 n° 60947-1
CSA C22.2 n° 60947-4-1
IEC/EN 60947-1
IEC/EN 60947-4-1
UL 60947-1
UL 60947-4-1

Certificates

CCC

The characteristics described in this document are subject to updates or modifications at any time. The descriptions, technical and functional information, illustrations and instructions in this brochure are purely illustrative, and are consequently not contractually binding

	cULus
	EAC

ETIM classification

ETIM 8.0	EC000066 - Power contactor, AC switching

The characteristics described in this document are subject to updates or modifications at any time. The descriptions, technical and functional information, illustrations and instructions in this brochure are purely illustrative, and are consequently not contractually binding