TI01393T/09/EN/04.22-00
71564542
2022-03-18

Technical Information
iTEMP TMT71

Temperature transmitter



With 4 to 20 mA analog output and choice of housing shapes for different applications

Application

- Universal temperature transmitter for the conversion of various input signals into a scalable, analog 4 to 20 mA output signal
- The iTEMP TMT71 is characterized by its reliability, long-term stability, high precision and advanced diagnostic function (important in critical processes)
- For the highest level of safety, reliability and risk reduction
- Universal input for resistance thermometers (RTD), thermocouples (TC), resistance transmitters (Ω), voltage transmitters (mV)
- Installation in terminal head, form B (flat face)
- Optional: installation in field housing for Ex d applications
- Optional: device design for DIN rail mounting

Your benefits

- Safe operation in hazardous areas thanks to international approvals
- Reliable operation thanks to sensor and device monitoring
- Diagnostics information according to NAMUR NE107
- Attachable measured value display TID10, optional
- Integrated Bluetooth® interface for the wireless display of measured values and configuration via Endress+Hauser SmartBlue (app)
- Fast and tool-free wiring thanks to push-in terminal technology, optional

Endress+Hauser
People for Process Automation

Function and system design

Measuring principle

Electronic recording and conversion of various input signals in industrial temperature measurement.

Measuring system

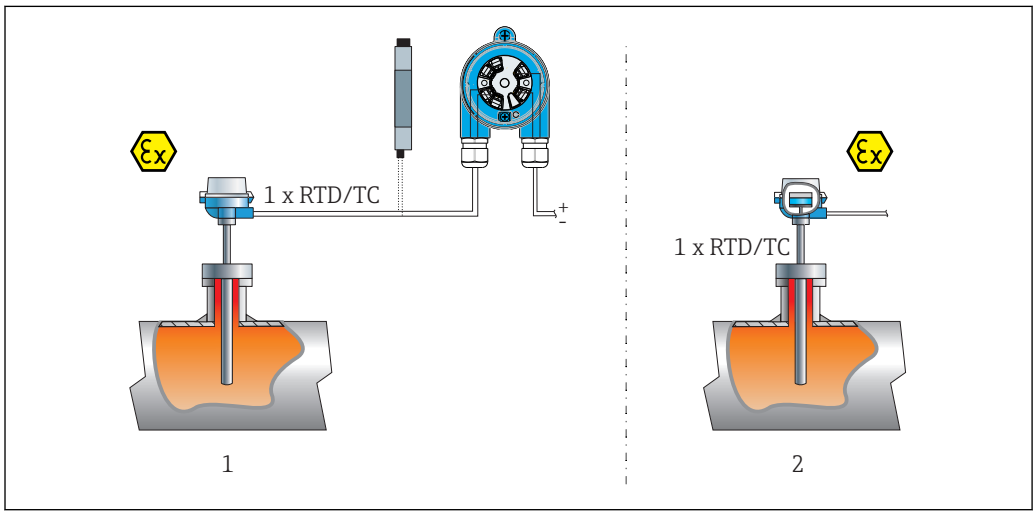

1 *Application examples*

1 *An RTD or thermocouple sensor with transmitter in remote installation, e.g. head transmitter in field housing or DIN rail transmitter*
2 *Installed head transmitter - 1 x RTD/TC wired directly*

Endress+Hauser offers a comprehensive range of industrial thermometers with resistance sensors or thermocouples.

When combined with the temperature transmitter, these components form a complete measuring point for a wide range of applications in the industrial sector.

The temperature transmitter is a 2-wire device with one measuring input and one analog output. The device not only transmits converted signals from resistance thermometers and thermocouples, it also transmits resistance and voltage signals using a 4 to 20 mA current signal. It can be installed as an intrinsically safe apparatus in hazardous areas and is used for instrumentation purposes in the flat-face terminal head as per DIN EN 50446 or as a DIN rail device for installation in the cabinet on a TH35 mounting rail as per EN 60715.

Intuitive commissioning and operation - wireless access to all device data via Bluetooth using the SmartBlue app.

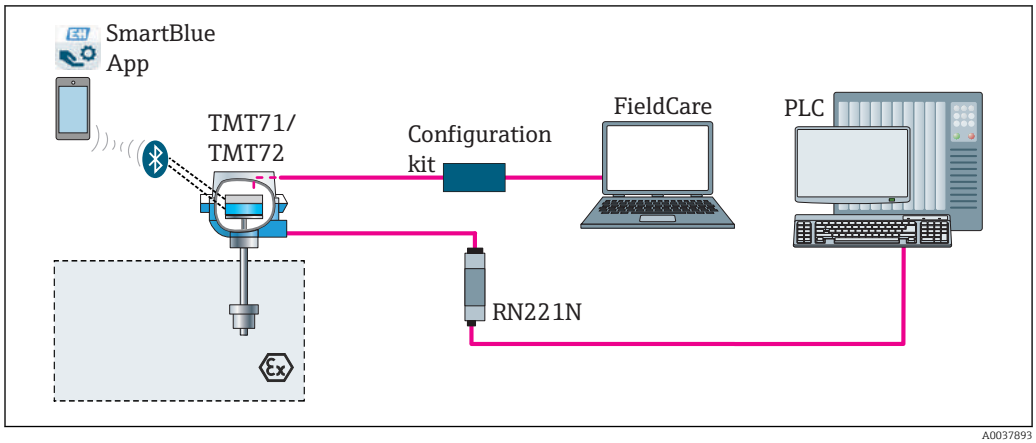

2 *Device architecture for PC-programmable transmitter*

Standard diagnostic functions

- Cable open-circuit, short-circuit of sensor wires
- Incorrect wiring
- Internal device errors
- Overrange/underrange detection
- Device temperature overrange/underrange detection

Corrosion detection as per NAMUR NE89

Corrosion of the sensor connection cables can cause incorrect measured value readings. The transmitter makes it possible to detect corrosion of the thermocouples and mV transmitters, as well as resistance thermometers and ohmmeters with 4-wire connection, before a measured value is corrupted. The transmitter prevents incorrect measured values from being read out and can issue a warning if conductor resistance values exceed plausible limits.

Low voltage detection

The low voltage detection function prevents the device from continuously transmitting an incorrect analog output value (caused by an incorrect or damaged power supply system or a damaged signal cable). If the supply voltage drops below the required value, the analog output value drops to < 3.6 mA for approx. 5 s. The device then tries to output the normal analog output value again. If the supply voltage is still too low, this process is repeated cyclically.

Diagnostics simulation

Device diagnostics can be simulated. The following items are set during such simulations:
- Measured value status
- Current diagnostics information
- Current output value as per simulated diagnostics

This simulation makes it possible to check that all higher-level systems respond as expected.

Input

Measured variable Temperature (temperature-linear transmission behavior), resistance and voltage.

Resistance thermometer (RTD) as per standard	Designation	α	Measuring range limits	Min. span
IEC 60751:2008	Pt100 (1) Pt200 (2) Pt500 (3) Pt1000 (4)	0.003851	−200 to +850 °C (−328 to +1 562 °F) −200 to +850 °C (−328 to +1 562 °F) −200 to +500 °C (−328 to +932 °F) −200 to +250 °C (−328 to +482 °F)	10 K (18 °F)
JIS C1604:1984	Pt100 (5)	0.003916	−200 to +510 °C (−328 to +950 °F)	10 K (18 °F)
DIN 43760 IPTS-68	Ni100 (6) Ni120 (7)	0.006180	−60 to +250 °C (−76 to +482 °F) −60 to +250 °C (−76 to +482 °F)	10 K (18 °F)
GOST 6651-94	Pt50 (8) Pt100 (9)	0.003910	−185 to +1 100 °C (−301 to +2 012 °F) −200 to +850 °C (−328 to +1 562 °F)	10 K (18 °F)
OIML R84: 2003, GOST 6651-2009	Cu50 (10) Cu100 (11)	0.004280	−180 to +200 °C (−292 to +392 °F) −180 to +200 °C (−292 to +392 °F)	10 K (18 °F)
	Ni100 (12) Ni120 (13)	0.006170	−60 to +180 °C (−76 to +356 °F) −60 to +180 °C (−76 to +356 °F)	10 K (18 °F)
OIML R84: 2003, GOST 6651-94	Cu50 (14)	0.004260	−50 to +200 °C (−58 to +392 °F)	10 K (18 °F)
-	Pt100 (Callendar van Dusen) Nickel polynomial Copper polynomial	-	The measuring range limits are specified by entering the limit values that depend on the coefficients A to C and R0.	10 K (18 °F)

Resistance thermometer (RTD) as per standard	Designation	α	Measuring range limits	Min. span
	▪ Connection type: 2-wire, 3-wire or 4-wire connection, sensor current: ≤ 0.3 mA ▪ With 2-wire circuit, compensation of wire resistance possible (0 to 30 Ω) ▪ With 3-wire and 4-wire connection, sensor wire resistance up to max. 50 Ω per wire			
Resistance transmitter	Resistance Ω		10 to 400 Ω 10 to 2 000 Ω	10 Ω 10 Ω

Thermocouples as per standard	Designation	Measuring range limits		Min. span
			Recommended temperature range:	
IEC 60584, Part 1 ASTM E230-3	Type A (W5Re-W20Re) (30) Type B (PtRh30-PtRh6) (31) Type E (NiCr-CuNi) (34) Type J (Fe-CuNi) (35) Type K (NiCr-Ni) (36) Type N (NiCrSi-NiSi) (37) Type R (PtRh13-Pt) (38) Type S (PtRh10-Pt) (39) Type T (Cu-CuNi) (40)	0 to +2 500 °C (+32 to +4 532 °F) +40 to +1 820 °C (+104 to +3 308 °F) −250 to +1 000 °C (−482 to +1 832 °F) −210 to +1 200 °C (−346 to +2 192 °F) −270 to +1 372 °C (−454 to +2 501 °F) −270 to +1 300 °C (−454 to +2 372 °F) −50 to +1 768 °C (−58 to +3 214 °F) −50 to +1 768 °C (−58 to +3 214 °F) −200 to +400 °C (−328 to +752 °F)	0 to +2 500 °C (+32 to +4 532 °F) +500 to +1 820 °C (+932 to +3 308 °F) −150 to +1 000 °C (−238 to +1 832 °F) −150 to +1 200 °C (−238 to +2 192 °F) −150 to +1 200 °C (−238 to +2 192 °F) −150 to +1 300 °C (−238 to +2 372 °F) +50 to +1 768 °C (+122 to +3 214 °F) +50 to +1 768 °C (+122 to +3 214 °F) −150 to +400 °C (−238 to +752 °F)	50 K (90 °F) 50 K (90 °F) 50 K (90 °F) 50 K (90 °F) 50 K (90 °F) 50 K (90 °F) 50 K (90 °F) 50 K (90 °F) 50 K (90 °F)
IEC 60584, Part 1 ASTM E230-3 ASTM E988-96	Type C (W5Re-W26Re) (32)	0 to +2 315 °C (+32 to +4 199 °F)	0 to +2 000 °C (+32 to +3 632 °F)	50 K (90 °F)
ASTM E988-96	Type D (W3Re-W25Re) (33)	0 to +2 315 °C (+32 to +4 199 °F)	0 to +2 000 °C (+32 to +3 632 °F)	50 K (90 °F)
DIN 43710	Type L (Fe-CuNi) (41) Type U (Cu-CuNi) (42)	−200 to +900 °C (−328 to +1 652 °F) −200 to +600 °C (−328 to +1 112 °F)	−150 to +900 °C (−238 to +1 652 °F) −150 to +600 °C (−238 to +1 112 °F)	50 K (90 °F)
GOST R8.585-2001	Type L (NiCr-CuNi) (43)	−200 to +800 °C (−328 to +1 472 °F)	−200 to +800 °C (+328 to +1 472 °F)	50 K (90 °F)
Voltage transmitter (mV)	Millivolt transmitter (mV)	−20 to 100 mV		5 mV

Output

Output signal

Analog output	4 to 20 mA, 20 to 4 mA (can be inverted)
Galvanic isolation	U = 2 kV AC for 1 minute (input/output)

Failure information

Failure information as per NAMUR NE43:

Failure information is created if the measuring information is missing or not valid. A complete list of all the errors occurring in the measuring system is created.

Underranging	Linear decrease from 4.0 to 3.8 mA
Overranging	Linear increase from 20.0 to 20.5 mA
Failure e.g. sensor failure; sensor short-circuit	≤ 3.6 mA ("low") or ≥ 21 mA ("high"), can be selected The "high" alarm setting can be set between 21.5 mA and 23 mA, thus providing the flexibility needed to meet the requirements of various control systems.

Linearization/transmission behavior

Temperature-linear, resistance-linear, voltage-linear

Mains filter

50/60 Hz

Filter

1st order digital filter: 0 to 120 s

Protocol-specific data	DTM device description files	Information and files available at: www.endress.com

Write protection for device parameters

- Hardware: Write protection for head transmitter on optional display using DIP switch
- Software: user role concept (password assignment)

Switch-on delay

≤ 7 s, until the first measured value signal is present at the current output. While switch-on delay = I_a ≤ 3.8 mA

Power supply

Supply voltage

Values for non-hazardous areas, protected against polarity reversal:
- Head transmitter: 10 V ≤ Vcc ≤ 36 V
- DIN rail device: 11 V ≤ Vcc ≤ 36 V

Values for hazardous areas, see Ex documentation.

Current consumption

- 3.6 to 23 mA
- Minimum current consumption 3.5 mA
- Current limit ≤ 23 mA

Electrical connection

Head transmitter

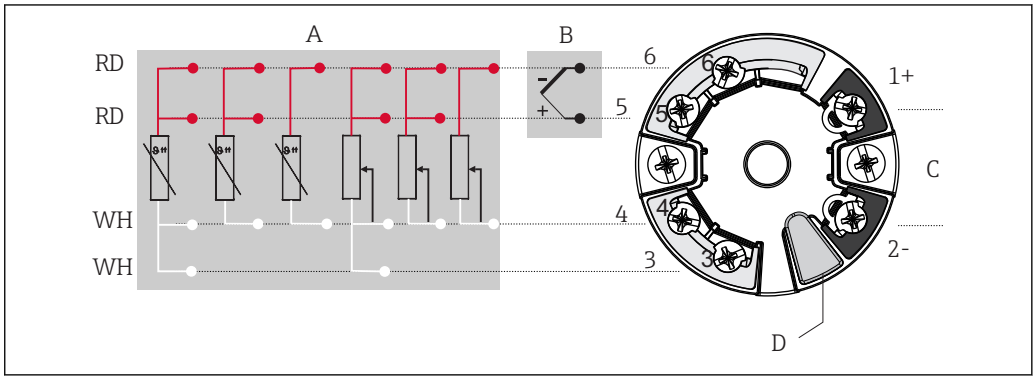

3 Assignment of terminal connections for head transmitter

A Sensor input, RTD and Ω, 4-, 3- and 2-wire
B Sensor input, TC and mV
C Bus terminator and power supply
D Display connection and CDI interface

DIN rail device

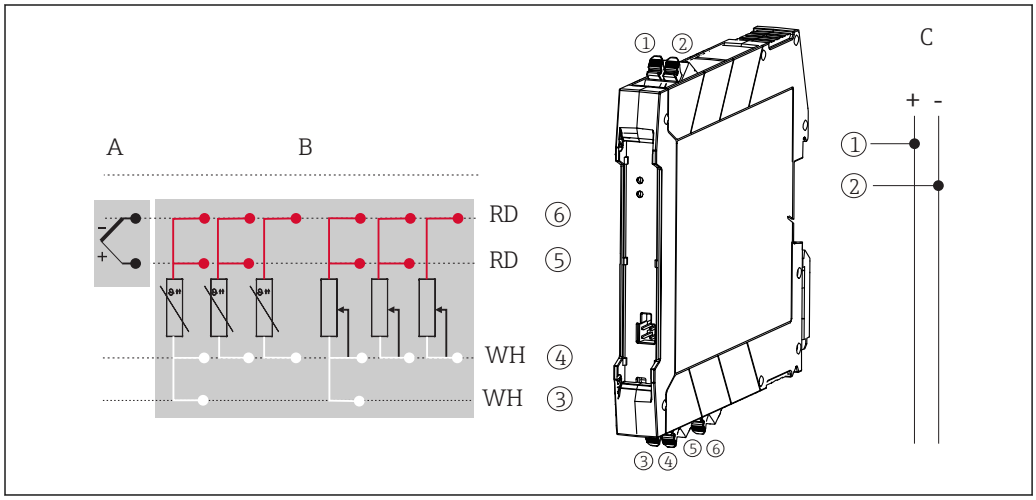

4 *Assignment of terminal connections for DIN rail transmitter*

A Sensor input, TC and mV
B Sensor input, RTD and Ω, 4-, 3- and 2-wire
C Power supply 4 to 20 mA

Terminal

Choice of screw terminals or push-in terminals for sensor and power supply cables:

Terminal design	Cable design	Cable cross-section
Screw terminals	Rigid or flexible	≤ 2.5 mm² (14 AWG)
		Field housing: 2.5 mm² (12 AWG) plus ferrule
Push-in terminals (cable version, stripping length = min. 10 mm (0.39 in)	Rigid or flexible	0.2 to 1.5 mm² (24 to 16 AWG)
	Flexible with wire end ferrules with/without plastic ferrule	0.25 to 1.5 mm² (24 to 16 AWG)

Ferrules must be used with push-in terminals and when using flexible wires with a cable cross-section of ≤ 0.3 mm². Otherwise, the use of ferrules when connecting flexible cables to push-in terminals is not recommended.

Performance characteristics

Response time

Resistance thermometer (RTD) and resistance transmitter (Ω measurement)	≤1 s
Thermocouples (TC) and voltage transmitters (mV)	≤ 1 s
Reference temperature	≤ 1 s

When recording step responses, it must be taken into account that the times for the internal reference measuring point may be added to the specified times.

Reference operating conditions

- Calibration temperature: +25 °C ±3 K (77 °F ±5.4 °F)
- Supply voltage: 24 V DC
- 4-wire circuit for resistance adjustment

Maximum measured error

In accordance with DIN EN 60770 and the reference conditions specified above. The measured error data correspond to ±2 σ (Gaussian distribution). The data include non-linearities and repeatability.

MV = measured value

LRV = lower range value of the sensor in question

Typical

Standard	Designation	Measuring range	Typical measured error (±)
Resistance thermometer (RTD) as per standard			Value at current output
IEC 60751:2008	Pt100 (1)	0 to +200 °C (32 to +392 °F)	0.10 °C (0.18 °F)
IEC 60751:2008	Pt1000 (4)		0.08 °C (0.14 °F)
GOST 6651-94	Pt100 (9)		0.09 °C (0.16 °F)
Thermocouples (TC) as per standard			Value at current output
IEC 60584, Part 1	Type K (NiCr-Ni) (36)	0 to +800 °C (32 to +1 472 °F)	0.64 °C (1.15 °F)
IEC 60584, Part 1	Type S (PtRh10-Pt) (39)		1.84 °C (3.31 °F)
GOST R8.585-2001	Type L (NiCr-CuNi) (43)		2.46 °C (4.43 °F)

Measured error for resistance thermometers (RTD) and resistance transmitters

Standard	Designation	Measuring range	Measured error (±)	
			Maximum [1]	Based on measured value [2]
IEC 60751:2008	Pt100 (1)	−200 to +850 °C (−328 to +1 562 °F)	≤ 0.33 °C (0.59 °F)	ME = ± √((0.05 °C (0.09 °F) + 0.006% * (MV - LRV))² + (0.03% * MR)²)
	Pt200 (2)		≤ 0.37 °C (0.67 °F)	ME = ± √((0.08 °C (0.14 °F) + 0.011% * (MV - LRV))² + (0.03% * MR)²)
	Pt500 (3)	−200 to +510 °C (−328 to +950 °F)	≤ 0.23 °C (0.41 °F)	ME = ± √((0.035 °C (0.063 °F) + 0.008% * (MV - LRV))² + (0.03% * MR)²)
	Pt1000 (4)	−200 to +250 °C (−328 to +482 °F)	≤ 0.15 °C (0.27 °F)	ME = ± √((0.02 °C (0.04 °F) + 0.007% * (MV - LRV))² + (0.03% * MR)²)
JIS C1604:1984	Pt100 (5)	−200 to +510 °C (−328 to +950 °F)	≤ 0.23 °C (0.41 °F)	ME = ± √((0.045 °C (0.08 °F) + 0.006% * (MV - LRV))² + (0.03% * MR)²)
GOST 6651-94	Pt50 (8)	−185 to +1 100 °C (−301 to +2 012 °F)	≤0.43 °C (0.77 °F)	ME = ± √((0.08 °C (0.14 °F) + 0.008% * (MV - LRV))² + (0.03% * MR)²)
	Pt100 (9)	−200 to +850 °C (−328 to +1 562 °F)	≤ 0.33 °C (0.59 °F)	ME = ± √((0.045 °C (0.08 °F) + 0.006% * (MV - LRV))² + (0.03% * MR)²)
DIN 43760 IPTS-68	Ni100 (6)	−60 to +250 °C (−76 to +482 °F)	≤ 0.10 °C (0.19 °F)	ME = ± √((0.04 °C (0.07 °F) - 0.004% * (MV - LRV))² + (0.03% * MR)²)
	Ni120 (7)			
OIML R84: 2003 / GOST 6651-2009	Cu50 (10)	−180 to +200 °C (−292 to +392 °F)	≤ 0.15 °C (0.27 °F)	ME = ± √((0.08 °C (0.14 °F) + 0.006% * (MV - LRV))² + (0.03% * MR)²)
	Cu100 (11)	−180 to +200 °C (−292 to +392 °F)	≤ 0.13 °C (0.234 °F)	ME = ± √((0.04 °C (0.07 °F) + 0.003% * (MV - LRV))² + (0.03% * MR)²)
	Ni100 (12)	−60 to +180 °C (−76 to +356 °F)	≤ 0.08 °C (0.14 °F)	ME = ± √((0.04 °C (0.07 °F) - 0.004% * (MV - LRV))² + (0.03% * MR)²)
	Ni120 (13)			
OIML R84: 2003, GOST 6651-94	Cu50 (14)	−50 to +200 °C (−58 to +392 °F)	≤ 0.13 °C (0.234 °F)	ME = ± √((0.09 °C (0.16 °F) + 0.004% * (MV - LRV))² + (0.03% * MR)²)

Standard	Designation	Measuring range	Measured error (±)	
Resistance transmitter	Resistance Ω	10 to 400 Ω	120.7mΩ	ME = ± √((17 mΩ + 0.0032 % * (MV² + (0.03% * MR)²)
		10 to 2 000 Ω	623.4mΩ	ME = ± √((60 mΩ + 0.006 % * (MV² + (0.03% * MR)²)

1) Maximum measured error for the specified measuring range.
2) Deviations from maximum measured error possible due to rounding.

Measured error for thermocouples (TC) and voltage transmitters

Standard	Designation	Measuring range	Measured error (±)	
			Maximum [1]	Based on measured value [2]
IEC 60584-1 ASTM E230-3	Type A (30)	0 to +2 500 °C (+32 to +4 532 °F)	≤ 1.81 °C (3.26 °F)	ME = ± √((1.0 °C (1.8 °F) + 0.026% * (MV - LRV))² + (0.03% * MR)²)
	Type B (31)	+500 to +1 820 °C (+932 to +3 308 °F)	≤ 2.14 °C (3.85 °F)	ME = ± √((2.1 °C (3.8 °F) - 0.09% * (MV - LRV))² + (0.03% * MR)²)
IEC 60584-1 ASTM E230-3 ASTM E988-96	Type C (32)	0 to +2 000 °C (+32 to +3 632 °F)	≤ 1.05 °C (1.89 °F)	ME = ± √((0.75 °C (1.35 °F) + 0.0055% * (MV - LRV))² + (0.03% * MR)²)
ASTM E988-96	Type D (33)		≤ 1.25 °C (2.26 °F)	ME = ± √((1.1 °C (1.98 °F) - 0.016% * (MV - LRV))² + (0.03% * MR)²)
IEC 60584-1	Type E (34)	−150 to +1 000 °C (−238 to +1 832 °F)	≤ 0.46 °C (0.82 °F)	ME = ± √((0.3 °C (0.54 °F) - 0.012% * (MV - LRV))² + (0.03% * MR)²)
	Type J (35)	−150 to +1 200 °C (−238 to +2 192 °F)	≤ 0.54 °C (0.98 °F)	ME = ± √((0.36 °C (0.65 °F) - 0.01% * (MV - LRV))² + (0.03% * MR)²)
	Type K (36)		≤ 0.64 °C (1.16 °F)	ME = ± √((0.5 °C (0.9 °F) - 0.01% * (MV - LRV))² + (0.03% * MR)²)
	Type N (37)	−150 to +1 300 °C (−238 to +2 372 °F)	≤ 0.82 °C (1.48 °F)	ME = ± √((0.7 °C (1.26 °F) - 0.025% * (MV - LRV))² + (0.03% * MR)²)
	Type R (38)	+50 to +1 768 °C (+122 to +3 214 °F)	≤ 1.68 °C (3.03 °F)	ME = ± √((1.6 °C (2.88 °F) - 0.04% * (MV - LRV))² + (0.03% * MR)²)
	Type S (39)			ME = ± √((1.60 °C (2.88 °F) - 0.03% * (MV - LRV))² + (0.03% * MR)²)
	Type T (40)	−150 to +400 °C (−238 to +752 °F)	≤ 0.53 °C (0.95 °F)	ME = ± √((0.5 °C (0.9 °F) - 0.05% * (MV - LRV))² + (0.03% * MR)²)
DIN 43710	Type L (41)	−150 to +900 °C (−238 to +1 652 °F)	≤ 0.5 °C (0.9 °F)	ME = ± √((0.39 °C (0.7 °F) - 0.016% * (MV - LRV))² + (0.03% * MR)²)
	Type U (42)	−150 to +600 °C (−238 to +1 112 °F)	≤ 0.50 °C (0.91 °F)	ME = ± √((0.45 °C (0.81 °F) - 0.04% * (MV - LRV))² + (0.03% * MR)²)
GOST R8.585-2001	Type L (43)	−200 to +800 °C (−328 to +1 472 °F)	≤ 2.32 °C (4.18 °F)	ME = ± √((2.3 °C (4.14 °F) - 0.015% * (MV - LRV))² + (0.03% * MR)²)

Standard	Designation	Measuring range	Measured error (±)	
Voltage transmitter (mV)		−20 to +100 mV	37.36 µV	ME = ± √((10.0 µV + (0.03% * MR)²)

1) Maximum measured error for the specified measuring range.
2) Deviations from maximum measured error possible due to rounding.

Total measured error of transmitter at current output = √(Measured error digital² + Measured error D/A²)

Sample calculation with Pt100, measuring range 0 to +200 °C (+32 to +392 °F), ambient temperature +35 °C (+95 °F), supply voltage 30 V:

Measured error	0.09 °C (0.16 °F)
Influence of ambient temperature	0.08 °C (0.14 °F)
Influence of supply voltage	0.06 °C (0.11 °F)
Measured error analog value (current output): √(Measured error² + Influence of ambient temperature² + Influence of supply voltage²)	**0.13 °C (0.23 °F)**

The measured error data corresponds to 2 σ (Gaussian distribution).

Physical input measuring range of sensors	
10 to 400 Ω	Cu50, Cu100, polynomial RTD, Pt50, Pt100, Ni100, Ni120
10 to 2 000 Ω	Pt200, Pt500, Pt1000
−20 to 100 mV	Thermocouples type: A, B, C, D, E, J, K, L, N, R, S, T, U

Sensor adjustment

Sensor-transmitter matching

RTD sensors are one of the most linear temperature measuring elements. Nevertheless, the output must be linearized. To significantly improve temperature measurement accuracy, the device allows the use of two methods:

- Callendar-Van Dusen coefficients (Pt100 resistance thermometer)
  The Callendar-Van Dusen equation is described as:
  $R_T = R_0[1+AT+BT^2+C(T-100)T^3]$

  The coefficients A, B and C are used to match the sensor (platinum) and transmitter in order to improve the accuracy of the measuring system. The coefficients for a standard sensor are specified in IEC 751. If no standard sensor is available or if greater accuracy is required, the coefficients for each sensor can be determined specifically with the aid of sensor calibration.

- Linearization for copper/nickel resistance thermometers (RTD)
  The polynomial equation for copper/nickel is as follows:
  $R_T = R_0(1+AT+BT^2)$

  The coefficients A and B are used for the linearization of nickel or copper resistance thermometers (RTD). The exact values of the coefficients derive from the calibration data and are specific to each sensor. The sensor-specific coefficients are then sent to the transmitter.

Sensor-transmitter matching using one of the methods mentioned above significantly improves the temperature measurement accuracy of the entire system. This is because the transmitter uses the specific data pertaining to the connected sensor to calculate the measured temperature, instead of using the standardized sensor curve data.

1-point adjustment (offset)

Shifts the sensor value

Current output adjustment Correction of the 4 or 20 mA current output value.

Operating influences The measured error data corresponds to 2 σ (Gaussian distribution).

Influence of ambient temperature and supply voltage on operation for resistance thermometers (RTD) and resistance transmitters

Designation	Standard	Ambient temperature: Influence (±) per 1 °C (1.8 °F) change		Supply voltage: Influence (±) per V change	
		Maximum	Based on measured value	Maximum	Based on measured value
Pt100 (1)	IEC 60751:2008	≤ 0.013 °C (0.023 °F)	0.0013% * (MV - LRV) + 0.003%, at least 0.003 °C (0.005 °F)	≤ 0.007 °C (0.013 °F)	0.0007% * (MV - LRV) + 0.003%, at least 0.003 °C (0.005 °F)
Pt200 (2)		≤ 0.017 °C (0.031 °F)	-	≤ 0.009 °C (0.016 °F)	-
Pt500 (3)		≤ 0.008 °C (0.014 °F)	0.0013% * (MV - LRV) + 0.003%, at least 0.006 °C (0.011 °F)	≤ 0.004 °C (0.007 °F)	0.0007% * (MV - LRV) + 0.003%, at least 0.006 °C (0.011 °F)
Pt1000 (4)		≤ 0.005 °C (0.009 °F)	-	≤ 0.003 °C (0.005 °F)	-
Pt100 (5)	JIS C1604:1984	≤ 0.009 °C (0.016 °F)	0.0013% * (MV - LRV) + 0.003%, at least 0.003 °C (0.005 °F)	≤ 0.004 °C (0.007 °F)	0.0007% * (MV - LRV) + 0.003%, at least 0.003 °C (0.005 °F)
Pt50 (8)	GOST 6651-94	≤ 0.017 °C (0.031 °F)	0.0015% * (MV - LRV) + 0.003%, at least 0.01 °C (0.018 °F)	≤ 0.009 °C (0.016 °F)	0.0007% * (MV - LRV) + 0.003%, at least 0.01 °C (0.018 °F)
Pt100 (9)		≤ 0.013 °C (0.023 °F)	0.0013% * (MV - LRV) + 0.003%, at least 0.003 °C (0.005 °F)	≤ 0.007 °C (0.013 °F)	0.0007% * (MV - LRV) + 0.003%, at least 0.003 °C (0.005 °F)
Ni100 (6)	DIN 43760 IPTS-68	≤ 0.003 °C (0.005 °F)	-	≤ 0.001 °C (0.002 °F)	-
Ni120 (7)			-		-
Cu50 (10)	OIML R84: 2003 / GOST 6651-2009	≤ 0.005 °C (0.009 °F)	-	≤ 0.005 °C (0.009 °F)	-
Cu100 (11)		≤ 0.004 °C (0.007 °F)	-	≤ 0.004 °C (0.007 °F)	-
Ni100 (12)		≤ 0.003 °C (0.005 °F)	-	≤ 0.003 °C (0.005 °F)	-
Ni120 (13)			-		-
Cu50 (14)	OIML R84: 2003 / GOST 6651-94	≤ 0.005 °C (0.009 °F)	-	≤ 0.005 °C (0.009 °F)	-
Resistance transmitter (Ω)					
10 to 400 Ω		≤ 4 mΩ	0.001% * MV + 0.003%, at least 1 mΩ	≤ 2 mΩ	0.0005% * MV + 0.003%, at least 1 mΩ
10 to 2 000 Ω		≤ 20 mΩ	0.001% * MV + 0.003%, at least 10 mΩ	≤ 10 mΩ	0.0005% * MV + 0.003%, at least 5 mΩ

Influence of ambient temperature and supply voltage on operation for thermocouples (TC) and voltage transmitters

Designation	Standard	Ambient temperature: Influence (±) per 1 °C (1.8 °F) change		Supply voltage: Influence (±) per V change	
		Maximum	Based on measured value	Maximum	Based on measured value
Type A (30)	IEC 60584-1 ASTM E230-3	≤ 0.07 °C (0.126 °F)	0.003% * (MV - LRV) + 0.003%, at least 0.01 °C (0.018 °F)	≤ 0.03 °C (0.054 °F)	0.0012% * (MV - LRV) + 0.003%, at least 0.013 °C (0.023 °F)
Type B (31)		≤ 0.04 °C (0.072 °F)	-	≤ 0.02 °C (0.036 °F)	-
Type C (32)	IEC 60584-1 ASTM E230-3 ASTM E988-96	≤ 0.04 °C (0.072 °F)	0.0021% * (MV - LRV) + 0.003%, at least 0.01 °C (0.018 °F)	≤ 0.02 °C (0.036 °F)	0.0012% * (MV - LRV) + 0.003%, at least 0.013 °C (0.023 °F)
Type D (33)	ASTM E988-96	≤ 0.04 °C (0.072 °F)	0.0019% * (MV - LRV) + 0.003%, at least 0.01 °C (0.018 °F)	≤ 0.02 °C (0.036 °F)	0.0011% * (MV - LRV) + 0.003%, at least 0.0 °C (0.0 °F)

Designation	Standard	Ambient temperature: Influence (±) per 1 °C (1.8 °F) change		Supply voltage: Influence (±) per V change	
Type E (34)	IEC 60584-1	≤ 0.02 °C (0.036 °F)	0.0014% * (MV - LRV) + 0.003%, at least 0.0 °C (0.0 °F)	≤ 0.01 °C (0.018 °F)	0.0008% * (MV - LRV) + 0.003%, at least 0.0 °C (0.0 °F)
Type J (35)			0.0014% * (MV - LRV) + 0.003%, at least 0.0 °C (0.0 °F)		0.0008% * MV + 0.003%, at least 0.0 °C (0.0 °F)
Type K (36)		≤ 0.02 °C (0.036 °F)	0.0015% * (MV - LRV) + 0.003%, at least 0.0 °C (0.0 °F)	≤ 0.01 °C (0.018 °F)	0.0009% * (MV - LRV) + 0.003%, at least 0.0 °C (0.0 °F)
Type N (37)			0.0014% * (MV - LRV) + 0.003%, at least 0.010 °C (0.018 °F)		0.0008% * MV + 0.003%, at least 0.0 °C (0.0 °F)
Type R (38)		≤ 0.03 °C (0.054 °F)	-	≤ 0.02 °C (0.036 °F)	-
Type S (39)			-		-
Type T (40)		≤ 0.01 °C (0.018 °F)	-	0.0 °C (0.0 °F)	-
Type L (41)	DIN 43710		-	≤ 0.01 °C (0.018 °F)	-
Type U (42)			-	0.0 °C (0.0 °F)	-
Type L (43)	GOST R8.585-2001		-	≤ 0.01 °C (0.018 °F)	-
Voltage transmitter (mV)					
−20 to 100 mV	-	≤ 1.5 µV	0.0015% * MV + 0.003%	≤ 0.8 µV	0.0008% * MV + 0.003%

MV = measured value

LRV = lower range value of the sensor in question

Total measured error of transmitter at current output = $\sqrt{}$(Measured error digital² + Measured error D/A²)

Long-term drift, resistance thermometers (RTD) and resistance transmitters

Designation	Standard	Long-term drift (±) [1]				
		after 1 month	after 6 months	after 1 year	after 3 years	after 5 years
		Based on measured value				
Pt100 (1)	IEC 60751:2008	≤ 0.039% * (MV - LRV) + 0.018% or 0.01 °C (0.02 °F)	≤ 0.061% * (MV - LRV) + 0.026% or 0.02 °C (0.04 °F)	≤ 0.007% * (MV - LRV) + 0.03% or 0.02 °C (0.04 °F)	≤ 0.0093% * (MV - LRV) + 0.036% or 0.03 °C (0.05 °F)	≤ 0.0102% * (MV - LRV) + 0.038% or 0.03 °C (0.05 °F)
Pt200 (2)		0.05 °C (0.09 °F)	0.05 °C (0.09 °F)	0.09 °C (0.17 °F)	0.12 °C (0.27 °F)	0.13 °C (0.24 °F)
Pt500 (3)		≤ 0.048% * (MV - LRV) + 0.018% or 0.01 °C (0.02 °F)	≤ 0.0075% * (MV - LRV) + 0.026% or 0.02 °C (0.04 °F)	≤ 0.068% * (MV - LRV) + 0.03% or 0.03 °C (0.06 °F)	≤ 0.011% * (MV - LRV) + 0.036% or 0.03 °C (0.05 °F)	≤ 0.0124% * (MV - LRV) + 0.038% or 0.04 °C (0.07 °F)
Pt1000 (4)			≤ 0.0077% * (MV - LRV) or 0.02 °C (0.04 °F)	≤ 0.0088% * (MV - LRV) + 0.03% or 0.02 °C (0.04 °F)	≤ 0.0114% * (MV - LRV) + 0.036% or 0.03 °C (0.05 °F)	≤ 0.013% * (MV - LRV) + 0.038% or 0.03 °C (0.05 °F)
Pt100 (5)	JIS C1604:1984	≤ 0.039% * (MV - LRV) + 0.018% or 0.01 °C (0.02 °F)	≤ 0.0061% * (MV - LRV) + 0.026% or 0.02 °C (0.04 °F)	≤ 0.007% * (MV - LRV) + 0.03% or 0.02 °C (0.04 °F)	≤ 0.0093% * (MV - LRV) + 0.036% or 0.03 °C (0.05 °F)	≤ 0.0102% * (MV - LRV) + 0.038% or 0.03 °C (0.05 °F)
Pt50 (8)	GOST 6651-94	≤ 0.042% * (MV - LRV) + 0.018% or 0.02 °C (0.04 °F)	≤ 0.0068% * (MV - LRV) + 0.026% or 0.04 °C (0.07 °F)	≤ 0.0076% * (MV - LRV) + 0.03% or 0.04 °C (0.08 °F)	≤ 0.01% * (MV - LRV) + 0.036% or 0.06 °C (0.11 °F)	≤ 0.011% * (MV - LRV) + 0.038% or 0.07 °C (0.12 °F)
Pt100 (9)		≤ 0.016% * (MV - LRV) + 0.018% or 0.04 °C (0.07 °F)	≤ 0.0061% * (MV - LRV) + 0.026% or 0.02 °C (0.04 °F)	≤ 0.007% * (MV - LRV) + 0.03% or 0.02 °C (0.04 °F)	≤ 0.0093% * (MV - LRV) + 0.036% or 0.03 °C (0.05 °F)	≤ 0.0102% * (MV - LRV) + 0.038% or 0.03 °C (0.05 °F)
Ni100 (6)	DIN 43760 IPTS-68	0.01 °C (0.02 °F)	0.01 °C (0.02 °F)	0.02 °C (0.04 °F)	0.02 °C (0.04 °F)	0.02 °C (0.04 °F)
Ni120 (7)						

Designation	Standard	Long-term drift (±) [1]				
Cu50 (10)	OIML R84: 2003 / GOST 6651-2009	0.02 °C (0.04 °F)	0.03 °C (0.05 °F)	0.04 °C (0.07 °F)	0.05 °C (0.09 °F)	0.05 °C (0.09 °F)
Cu100 (11)		0.01 °C (0.02 °F)	0.02 °C (0.04 °F)	0.02 °C (0.04 °F)	0.03 °C (0.05 °F)	0.04 °C (0.07 °F)
Ni100 (12)			0.01 °C (0.02 °F)	0.02 °C (0.04 °F)	0.02 °C (0.04 °F)	0.02 °C (0.04 °F)
Ni120 (13)						
Cu50 (14)	OIML R84: 2003 / GOST 6651-94	0.02 °C (0.04 °F)	0.03 °C (0.05 °F)	0.04 °C (0.07 °F)	0.05 °C (0.09 °F)	0.05 °C (0.09 °F)
Resistance transmitter						
10 to 400 Ω		≤ 0.003% * MV + 0.018% or 4 mΩ	≤ 0.0048% * MV + 0.026% or 6 mΩ	≤ 0.0055% * MV + 0.03% or 7 mΩ	≤ 0.0073% * MV + 0.036% or 10 mΩ	≤ 0.008% * (MV - LRV) + 0.038% or 11 mΩ
10 to 2 000 Ω		≤ 0.0038% * MV + 0.018% or 25 mΩ	≤ 0.006% * MV + 0.026% or 40 mΩ	≤ 0.007% * (MV - LRV) + 0.03% or 47 mΩ	≤ 0.009% * (MV - LRV) + 0.036% or 60 mΩ	≤ 0.0067% * (MV - LRV) + 0.038% or 67 mΩ

1) Whichever is greater

Long-term drift, thermocouples (TC) and voltage transmitters

Designation	Standard	Long-term drift (±) [1]				
		after 1 month	after 6 months	after 1 year	after 3 years	after 5 years
		Based on measured value				
Type A (30)	IEC 60584-1 ASTM E230-3	≤ 0.021% * (MV - LRV) + 0.018% or 0.34 °C (0.61 °F)	≤ 0.037% * (MV - LRV) + 0.026% or 0.59 °C (1.06 °F)	≤ 0.044% * (MV - LRV) + 0.03% or 0.70 °C (1.26 °F)	≤ 0.058% * (MV - LRV) + 0.036% or 0.93 °C (1.67 °F)	≤ 0.063% * (MV - LRV) + 0.038% or 1.01 °C (1.82 °F)
Type B (31)		0.80 °C (1.44 °F)	1.40 °C (2.52 °F)	1.66 °C (2.99 °F)	2.19 °C (3.94 °F)	2.39 °C (4.30 °F)
Type C (32)	IEC 60584-1 ASTM E230-3 ASTM E988-96	0.34 °C (0.61 °F)	0.58 °C (1.04 °F)	0.70 °C (1.26 °F)	0.92 °C (1.66 °F)	1.00 °C (1.80 °F)
Type D (33)	ASTM E988-96	0.42 °C (0.76 °F)	0.73 °C (1.31 °F)	0.87 °C (1.57 °F)	1.15 °C (2.07 °F)	1.26 °C (2.27 °F)
Type E (34)	IEC 60584-1	0.13 °C (0.23 °F)	0.22 °C (0.40 °F)	0.26 °C (0.47 °F)	0.34 °C (0.61 °F)	0.37 °C (0.67 °F)
Type J (35)		0.15 °C (0.27 °F)	0.26 °C (0.47 °F)	0.31 °C (0.56 °F)	0.41 °C (0.74 °F)	0.44 °C (0.79 °F)
Type K (36)		0.17 °C (0.31 °F)	0.30 °C (0.54 °F)	0.36 °C (0.65 °F)	0.47 °C (0.85 °F)	0.51 °C (0.92 °F)
Type N (37)		0.25 °C (0.45 °F)	0.44 °C (0.79 °F)	0.52 °C (0.94 °F)	0.69 °C (1.24 °F)	0.75 °C (1.35 °F)
Type R (38)		0.62 °C (1.12 °F)	1.08 °C (1.94 °F)	1.28 °C (2.30 °F)	1.69 °C (3.04 °F)	1.85 °C (3.33 °F)
Type S (39)				1.29 °C (2.32 °F)	1.70 °C (3.06 °F)	
Type T (40)		0.18 °C (0.32 °F)	0.32 °C (0.58 °F)	0.38 °C (0.68 °F)	0.50 °C (0.90 °F)	0.54 °C (0.97 °F)
Type L (41)	DIN 43710	0.12 °C (0.22 °F)	0.21 °C (0.38 °F)	0.25 °C (0.45 °F)	0.33 °C (0.59 °F)	0.36 °C (0.65 °F)
Type U (42)		0.18 °C (0.32 °F)	0.31 °C (0.56 °F)	0.37 °C (0.67 °F)	0.49 °C (0.88 °F)	0.53 °C (0.95 °F)
Type L (43)	GOST R8.585-2001	0.15 °C (0.27 °F)	0.26 °C (0.47 °F)	0.31 °C (0.56 °F)	0.41 °C (0.74 °F)	0.44 °C (0.79 °F)
Voltage transmitter (mV)						
– 20 to 100 mV		≤ 0.012% * MV + 0.018% or 4 µV	≤ 0.021% * MV + 0.026% or 7 µV	≤ 0.025% * MV + 0.03% or 8 µV	≤ 0.033% * MV + 0.036% or 11 µV	≤ 0.036% * MV + 0.038% or 12 µV

1) Whichever is greater

Influence of the reference junction

Pt100 DIN IEC 60751 Cl. B (internal reference junction with thermocouples TC)

If an external 2-wire Pt100 is used for the reference junction measurement, the measured error caused by the transmitter is < 0.5 °C (0.9 °F). The measured error of the sensor element also needs to be added.

Installation

Mounting location

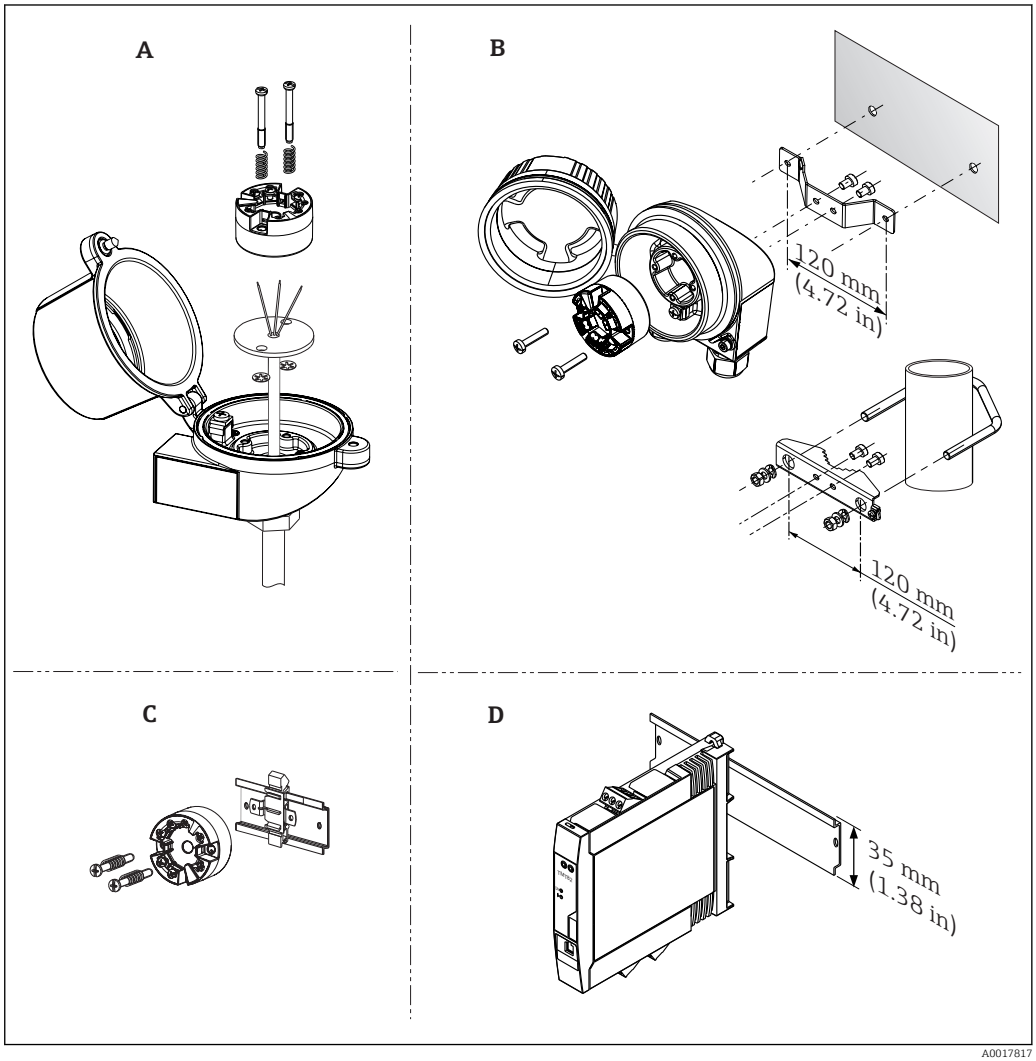

5 *Mounting location options for the transmitter*

A Terminal head Form B (flat face) as per DIN EN 50446, direct installation on insert with cable entry (middle hole 7 mm (0.28 in))
B Separated from process in field housing, wall or pipe mounting
C With DIN rail clip on DIN rail as per IEC 60715 (TH35)
D DIN rail device for mounting on a TH35 mounting rail as per EN 60715

- The head transmitter must not be operated using the DIN rail clip and remote sensors as a substitute for a DIN rail device in a cabinet.
- When installing the head transmitter in a terminal head form B (flat face), make sure there is sufficient space in the terminal head!

Orientation

Orientation
When using DIN rail devices with a thermocouple/mV measurement, increased measurement deviation may occur depending on the installation situation and ambient conditions. If the DIN rail device is mounted on the DIN rail without any adjacent devices, this may result in deviations of

±1.34 °C. If the DIN rail device is mounted in series between other DIN rail devices (reference condition: 24 V, 12 mA), deviations of max. +2.94 °C may occur.

Environment

Ambient temperature range	−40 to +85 °C (−40 to +185 °F), for hazardous areas see Ex documentation
Storage temperature	▪ Head transmitter: −50 to +100 °C (−58 to +212 °F) ▪ DIN rail device: −40 to +100 °C (−40 to +212 °F)
Altitude	Up to 4000 m (4374.5 yards) above mean sea level.

Humidity	▪ Condensation:
	  ▪ Head transmitter permitted
	  ▪ DIN rail transmitter not permitted
	▪ Max. rel. humidity: 95% as per IEC 60068-2-30

Climate class	▪ Head transmitter: climate class C1 as per IEC 60654-1 ▪ DIN rail device: climate class B2 as per IEC 60654-1
Degree of protection	▪ Head transmitter with screw terminals: IP 00, with push-in terminals: IP 30. In installed state, depends on the terminal head or field housing used. ▪ When installing in field housing TA30A, TA30D or TA30H: IP 66/68 (NEMA Type 4x encl.) ▪ DIN rail device: IP 20
Shock and vibration resistance	Vibration resistance as per DNVGL-CG-0339 : 2015 and DIN EN 60068-2-27 ▪ Head transmitter: 2 to 100 Hz at 4g (increased vibration stress) ▪ DIN rail device: 2 to 100 Hz at 0.7g (general vibration stress) Shock resistance as per KTA 3505 (section 5.8.4 Shock test)
Electromagnetic compatibility (EMC)	**CE compliance** Electromagnetic compatibility in accordance with all the relevant requirements of the IEC/EN 61326 series and NAMUR Recommendation EMC (NE21). For details, refer to the Declaration of Conformity. All tests were passed both with and without ongoing communication. Maximum measured error <1% of measuring range. Interference immunity as per IEC/EN 61326 series, industrial requirements Interference emission as per IEC/EN 61326 series, Class B equipment
Overvoltage category	Overvoltage category II
Degree of contamination	Pollution degree 2

Mechanical construction

Design, dimensions

Dimensions in mm (in)

Head transmitter

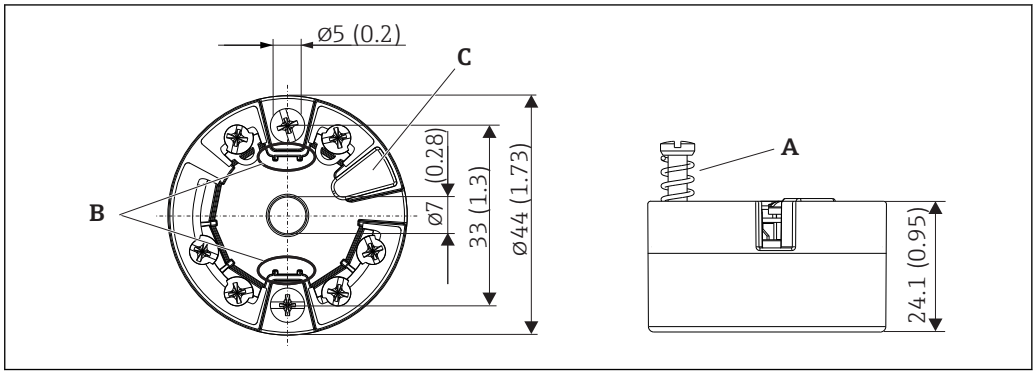

6 *Version with screw terminals*

A Spring travel L ≥ 5 mm (not for US - M4 securing screws)
B Mounting elements for attachable measured value display TID10
C Interface for connecting measured value display or configuration tool

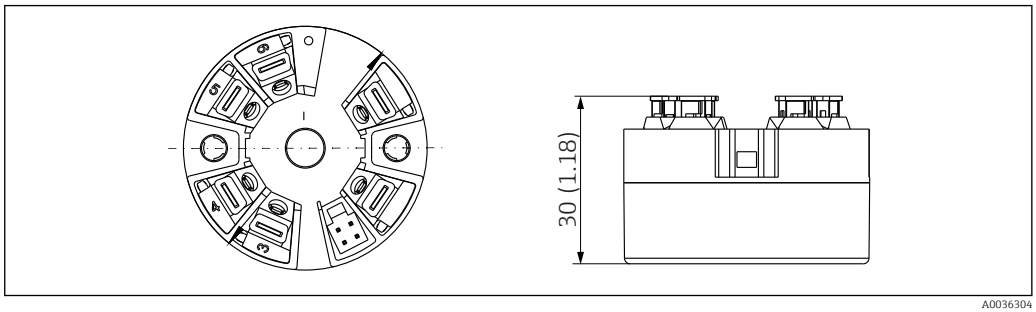

7 *Version with push-in terminals. Dimensions are identical to the version with screw terminals, apart from housing height.*

DIN rail device

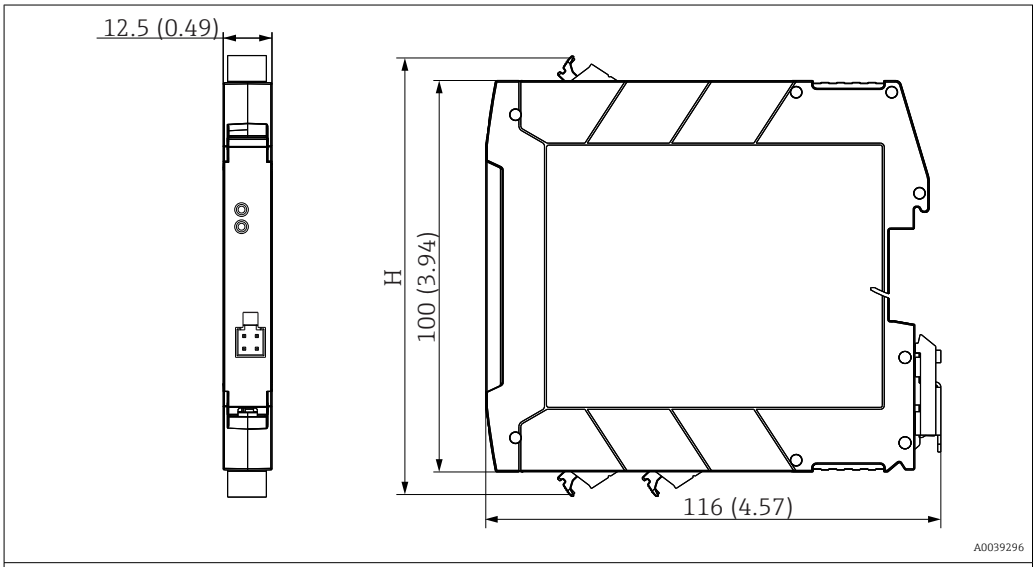

Height of housing H varies depending on the terminal version:
- Screw terminals: H = 114 mm (4.49 in)
- Push-in terminals: H = 111.5 mm (4.39 in)

Field housing

All field housings have an internal geometry in accordance with DIN EN 50446, Form B (flat face).
Cable glands in the diagrams: M20x1.5

Maximum ambient temperatures for cable glands	
Type	**Temperature range**
Polyamide cable gland ½" NPT, M20x1.5 (non-Ex)	−40 to +100 °C (−40 to 212 °F)
Polyamide cable gland M20x1.5 (for dust ignition-proof area)	−20 to +95 °C (−4 to 203 °F)
Brass cable gland ½" NPT, M20x1.5 (for dust ignition-proof area)	−20 to +130 °C (−4 to +266 °F)

TA30A	Specification
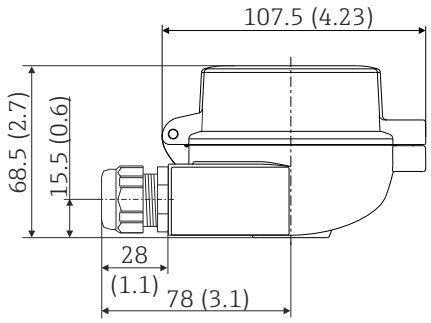	▪ Two cable entries ▪ Material: aluminum, polyester powder coated Seals: silicone ▪ Cable entry glands: 1/2" NPT and M20x1.5 ▪ Head color: blue, RAL 5012 ▪ Cap color: gray, RAL 7035 ▪ Weight: 330 g (11.64 oz)

TA30A with display window in cover	Specification
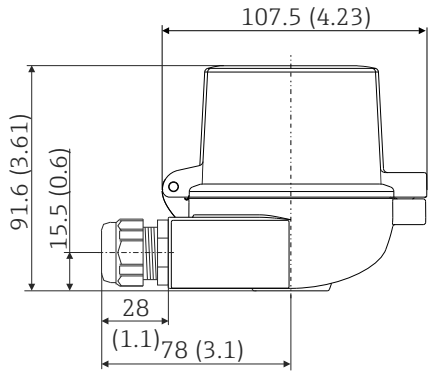	▪ Two cable entries ▪ Material: aluminum, polyester powder coated Seals: silicone ▪ Cable entry glands: 1/2" NPT and M20x1.5 ▪ Head color: blue, RAL 5012 ▪ Cap color: gray, RAL 7035 ▪ Weight: 420 g (14.81 oz)

TA30H	Specification
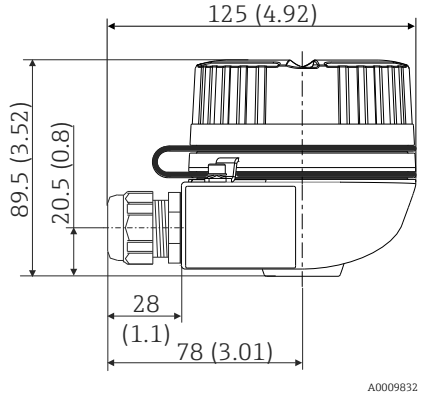	▪ Flameproof (XP) version, explosion-protected, captive screw cap, with two cable entries ▪ Protection class: NEMA Type 4x Encl. ▪ Material: ▪ Aluminum, with polyester powder coating ▪ Stainless steel 316L without coating ▪ Cable entry glands: ½" NPT, M20x1.5 ▪ Color of aluminum head: blue, RAL 5012 ▪ Color of aluminum cap: gray, RAL 7035 ▪ Weight: ▪ Aluminium approx. 640 g (22.6 oz) ▪ Stainless steel approx. 2 400 g (84.7 oz)

TA30H with display window in cover	Specification
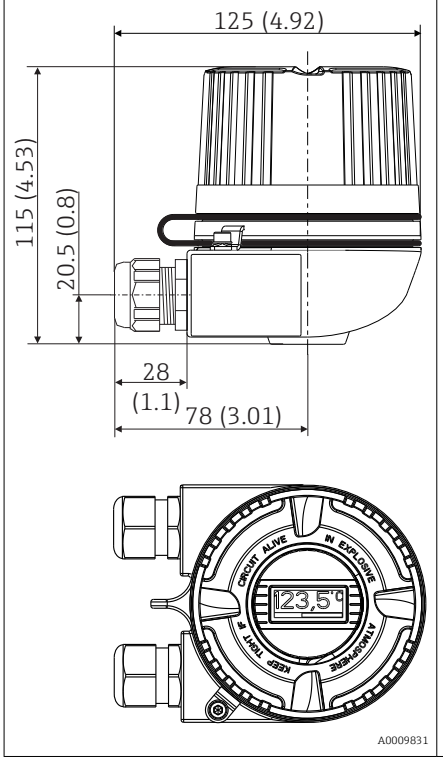	▪ Flameproof (XP) version, explosion-protected, captive screw cap, with two cable entries ▪ Protection class: NEMA Type 4x Encl. ▪ Material: ▪ Aluminum with polyester powder coating ▪ Stainless steel 316L without coating ▪ Cable entry glands: ½" NPT, M20x1.5 ▪ Color of aluminum head: blue, RAL 5012 ▪ Color of aluminum cap: gray, RAL 7035 ▪ Weight: ▪ Aluminium approx. 860 g (30.33 oz) ▪ Stainless steel approx. 2 900 g (102.3 oz)

TA30D	Specification
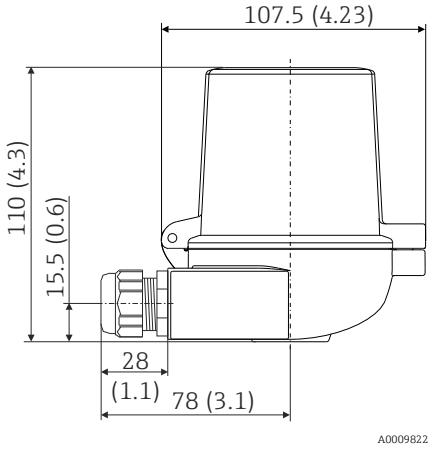	▪ 2 cable entries ▪ Material: aluminum, polyester powder coated Seals: silicone ▪ Cable entry glands: 1/2" NPT and M20x1.5 ▪ Two head transmitters can be mounted. In the standard configuration one transmitter is mounted in the terminal head cover and an additional terminal block is installed directly on the insert. ▪ Head color: blue, RAL 5012 ▪ Cap color: gray, RAL 7035 ▪ Weight: 390 g (13.75 oz)

Weight

- Head transmitter: approx. 40 to 50 g (1.4 to 1.8 oz)
- Field housing: see specifications
- DIN rail device: approx. 100 g (3.53 oz)

Materials

All the materials used are RoHS-compliant.

- Housing: polycarbonate (PC)
- Terminals:
  - Screw terminals: nickel-plated brass and gold-plated or tin-plated contacts
  - Push-in terminals: tin-plated brass, contact springs 1.4310, 301 (AISI)
- Potting compound:
  - Head transmitter: QSIL 553
  - DIN rail housing: Silgel612EH

Field housing: see specifications

Operability

Local operation

Head transmitter

The head transmitter has no display or operating elements. There is the option of using the attachable measured value display TID10 together with the head transmitter. The display provides plain-text information on the current measured value and the measuring point identification. An optional bar graph is also used. In the event of a fault in the measurement chain, this will be displayed in inverse color showing the channel ident and error number. DIP switches can be found on the rear of the display. These enable hardware settings to be made e.g. write protection.

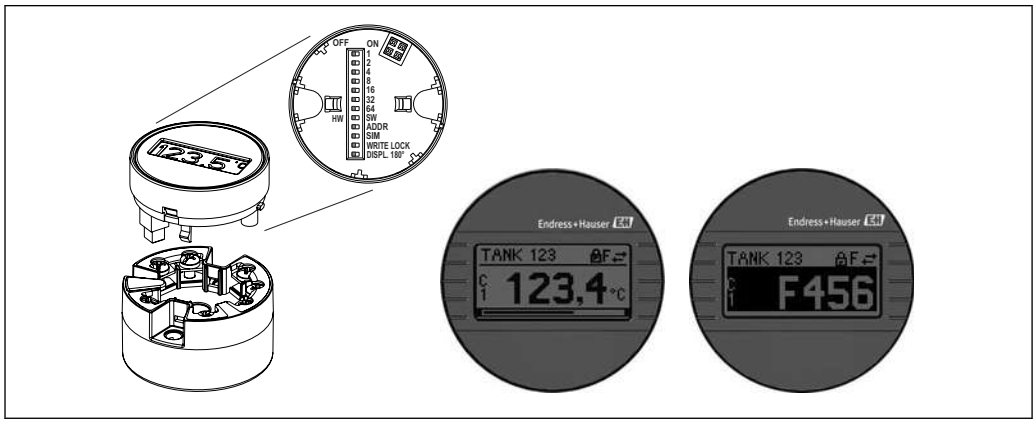

8 *Attachable measured value display TID10 with bar graph indicator (optional)*

If the head transmitter is installed in a field housing and used with a display, an enclosure with a glass window in the cover must be used.

DIN rail device

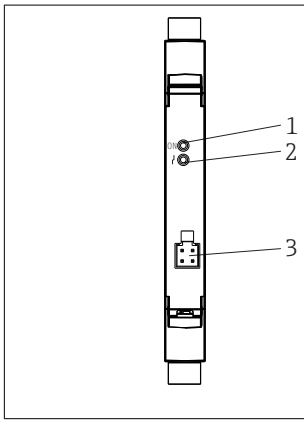

1:	Power LED	A green LED indicates that the voltage supply is correct
2:	Status LED	Off: no diagnostic message
		Red: Category F diagnostic message
		Red flashing: Category C, S or M diagnostic message
3:	Service interface	For connecting a configuration tool

For connecting a configuration tool

The configuration of device-specific parameters takes place via the CDI interface (service interface) of the device. There are special configuration tools from different manufacturers available for this purpose. For more information, contact your Endress+Hauser sales representative.

Bluetooth® wireless technology

The device has an optional Bluetooth® wireless technology interface and can be operated and configured using the SmartBlue app.

- The range under reference conditions is:
  - 10 m (33 ft) when installed in the terminal head or field housing with display window, or in the DIN rail housing
  - 5 m (16.4 ft) when installed in the terminal head or field housing
- Incorrect operation by unauthorized persons is prevented by means of encrypted communication and password encryption
- The Bluetooth® wireless technology interface can be deactivated

However, simultaneous use of the Bluetooth® wireless technology interface and attachable measured value display is not possible.

Certificates and approvals

For the approvals available, see the Configurator on the specific product page: www.endress.com → (search for device name)

CE mark

The product meets the requirements of the harmonized European standards. As such, it complies with the legal specifications of the EC directives. The manufacturer confirms successful testing of the product by affixing to it the CE-mark.

EAC mark

The product meets the legal requirements of the EEU guidelines. The manufacturer confirms the successful testing of the product by affixing the EAC mark.

Ex approval

Information about currently available Ex versions (ATEX, FM, CSA, etc.) can be supplied by your E+H Sales Center on request. All explosion protection data are given in separate documentation which is available upon request.

CSA C/US

The device meets the requirements of "CLASS 2252 06 - Process Control Equipment" and "CLASS 2252 86 - Process Control Equipment (Certified to US Standards)"

Marine approvals

For the type approval certificates (DNVGL, etc.) currently available, please contact your Sales Center for information. All data relating to shipbuilding can be found in separate type approval certificates which can be requested as needed.

Radio approval

The device has Bluetooth® radio approval in accordance with the Radio Equipment Directive (RED) and the Federal Communications Commission (FCC) 15.247 for the USA.

Europe	
This device meets the requirements of the Radio Equipment Directive RED 2014/53/EU:	▪ EN 300 328 ▪ EN 301 489-1 ▪ EN 301 489-17

Canada and United States	
English: This device complies with Part 15 of the FCC Rules and with Industry Canada licenceexempt RSS standard(s). Operation is subject to the following two conditions: ▪ This device may not cause harmful interference, and ▪ This device must accept any interference received, including interference that may cause undesired operation. Changes or modifications made to this equipment not expressly approved by Endress+Hauser may void the user's authorization to operate this equipment. This equipment has been tested and found to comply with the limits for a Class B digital device, pursuant to part 15 of the FCC Rules. These limits are designed to provide reasonable protection against harmful interference in a residential installation. This equipment generates, uses and can radiate radio frequency energy and, if not installed and used in accordance with the instructions, may cause harmful interference to radio communications. However, there is no guarantee that interference will not occur in a particular installation. If this equipment does cause harmful interference to radio or television reception, which can be determined by turning the equipment off and on, the user is encouraged to try to correct the interference by one or more of the following measures: ▪ Reorient or relocate the receiving antenna. ▪ Increase the separation between the equipment and receiver. ▪ Connect the equipment into an outlet on a circuit different from that to which the receiver is connected. ▪ Consult the dealer or an experienced radio/TV technician for help. This equipment complies with FCC and IC radiation exposure limits set forth for an uncontrolled environment. This equipment should be installed and operated with minimum distance 20cm between the radiator and your body.	Français: Le présent appareil est conforme aux CNR d'industrie Canada applicables aux appareils radio exempts de licence. L'exploitation est autorisée aux deux conditions suivantes : ▪ L'appareil ne doit pas produire de brouillage, et ▪ L'utilisateur de l'appareil doit accepter tout brouillage radioélectrique subi, même si le brouillage est susceptible d'en compromettre le fonctionnement. Les changements ou modifications apportées à cet appareil non expressément approuvée par Endress +Hauser peut annuler l'autorisation de l'utilisateur d'opérer cet appareil. Déclaration d'exposition aux radiations: Cet équipement est conforme aux limites d'exposition aux rayonnements IC établies pour un environnement non contrôlé. Cet équipement doit être installé et utilisé avec un minimum de 20 cm de distance entre la source de rayonnement et votre corps.

MTTF

- Without Bluetooth® wireless technology: 168 years
- With Bluetooth® wireless technology: 123 years

The mean time to failure (MTTF) denotes the theoretically expected time until the device fails during normal operation. The term MTTF is used for systems that cannot be repaired, e.g. temperature transmitters.

Other standards and guidelines

- IEC 60529:
  Degrees of protection provided by enclosures (IP code)
- IEC/EN 61010-1:
  Safety requirements for electrical equipment for measurement, control and laboratory use
- IEC/EN 61326 series:
  Electromagnetic compatibility (EMC requirements)
- This Class B digital apparatus complies with Canadian ICES-003
  Cet appareil numérique de la classe B est conforme à la norme NMB-003 du Canada.
  Compliance Label: CAN ICES-3 (B)/NMB-3(B)

Ordering information

Detailed ordering information is available for your nearest sales organization www.addresses.endress.com or in the Product Configurator under www.endress.com :

1. Click Corporate
2. Select the country

3. Click Products
4. Select the product using the filters and search field
5. Open the product page

The Configuration button to the right of the product image opens the Product Configurator.

Product Configurator - the tool for individual product configuration
- Up-to-the-minute configuration data
- Depending on the device: Direct input of measuring point-specific information such as measuring range or operating language
- Automatic verification of exclusion criteria
- Automatic creation of the order code and its breakdown in PDF or Excel output format
- Ability to order directly in the Endress+Hauser Online Shop

Accessories

Various accessories, which can be ordered with the device or subsequently from Endress+Hauser, are available for the device. Detailed information on the order code in question is available from your local Endress+Hauser sales center or on the product page of the Endress+Hauser website: www.endress.com.

Accessories included in the scope of delivery:
- Printed version of Brief Operating Instructions in English
- ATEX supplementary documentation: ATEX Safety instructions (XA), **C**ontrol **D**rawings (CD)
- Mounting material for head transmitter

Device-specific accessories

Accessories for the head transmitter
TID10 display unit for Endress+Hauser head transmitter iTEMP TMT8x [1] or TMT7x, attachable
TID10 service cable; connecting cable for service interface, 40 cm
Field housing TA30x for Endress+Hauser head transmitter
Adapter for DIN rail mounting, clip as per IEC 60715 (TH35) without securing screws
Standard - DIN mounting kit (2 screws + springs, 4 securing disks and 1 display connector cover)
US - M4 mounting screws (2 M4 screws and 1 display connector cover)
Stainless steel wall mounting bracket Stainless steel pipe mounting bracket

1) Without TMT80

Communication-specific accessories

Accessories	Description
Commubox FXA291	Connects Endress+Hauser field devices with a CDI interface (= Endress+Hauser Common Data Interface) and the USB port of a computer or laptop. For details, see Technical Information TI405C/07
Field Xpert SMT70	Universal, high-performance tablet PC for device configuration The tablet PC enables mobile plant asset management in hazardous and non-hazardous areas. It is suitable for commissioning and maintenance staff to manage field instruments with a digital communication interface and to record progress. This tablet PC is designed as a comprehensive, all-in-one solution. With a pre-installed driver library, it is an easy-to-use, touch-sensitive tool which can be used to manage field instruments throughout their entire life cycle. For details, see Technical Information TI01342S/04
Configuration kit TXU10	Configuration kit for PC-programmable transmitter - FDT/DTM-based plant asset management tool, FieldCare/DeviceCare, and interface cable (4-pin connector) for PC with USB port.

Service-specific accessories

Accessories	Description
Applicator	Software for selecting and sizing Endress+Hauser measuring devices: ▪ Calculation of all the necessary data for identifying the optimum measuring device: e.g. pressure loss, accuracy or process connections. ▪ Graphic illustration of the calculation results Administration, documentation and access to all project-related data and parameters over the entire life cycle of a project. Applicator is available: Via the Internet: https://portal.endress.com/webapp/applicator

Accessories	Description
Configurator	Product Configurator - the tool for individual product configuration ▪ Up-to-the-minute configuration data ▪ Depending on the device: Direct input of measuring point-specific information such as measuring range or operating language ▪ Automatic verification of exclusion criteria ▪ Automatic creation of the order code and its breakdown in PDF or Excel output format ▪ Ability to order directly in the Endress+Hauser Online Shop The Configurator is available on the Endress+Hauser website at: www.endress.com -> Click "Corporate" -> Select your country -> Click "Products" -> Select the product using the filters and search field -> Open product page -> The "Configure" button to the right of the product image opens the Product Configurator.

DeviceCare SFE100	Configuration tool for devices via fieldbus protocols and Endress+Hauser service protocols. DeviceCare is the tool developed by Endress+Hauser for the configuration of Endress+Hauser devices. All smart devices in a plant can be configured via a point-to-point or point-to-bus connection. The user-friendly menus enable transparent and intuitive access to the field devices. For details, see Operating Instructions BA00027S

FieldCare SFE500	FDT-based plant asset management tool from Endress+Hauser. It can configure all smart field units in your system and helps you manage them. By using the status information, it is also a simple but effective way of checking their status and condition. For details, see Operating Instructions BA00027S and BA00065S

Accessories	Description
W@M	Life cycle management for your plant W@M offers assistance with a wide range of software applications over the entire process: from planning and procurement to the installation, commissioning and operation of the measuring devices. All the relevant information is available for every measuring device over the entire life cycle, such as the device status, device-specific documentation, spare parts etc. The application already contains the data of your Endress+Hauser device. Endress+Hauser also takes care of maintaining and updating the data records. W@M is available: Via the Internet: www.endress.com/lifecyclemanagement

System components

Accessories	Description
RN22	Single- or two-channel active barrier for safe separation of 0/4 to 20 mA standard signal circuits with bidirectional HART® transmission. In the signal duplicator option, the input signal is transmitted to two galvanically isolated outputs. The device has one active and one passive current input; the outputs can be operated actively or passively. The RN22 requires a supply voltage of 24 V_{DC}. For details, see Technical Information TI01515K
RN42	Single-channel active barrier for safe separation of 0/4 to 20 mA standard signal circuits with bidirectional HART® transmission. The device has one active and one passive current input; the outputs can be operated actively or passively. The RN42 can be powered with a wide range voltage of 24 to 230 $V_{AC/DC}$. For details, see Technical Information TI01584K
RIA15	Process display, digital, loop-powered display unit for 4 to 20 mA circuits, panel mounting, with optional HART® communication. Displays 4 to 20 mA or up to 4 HART® process variables For details, see Technical Information TI01043K
Graphic Data Manager Memograph M	The Advanced Data Manager Memograph M is a flexible and powerful system for organizing process values. Optional HART® input cards are available, each providing four inputs (4/8/12/16/20). They transmit highly accurate process values from the directly connected HART® devices, so that they are available for calculation and data logging. The measured process values are clearly presented on the display and logged safely, monitored for limit values and analyzed. Via common communication protocols, the measured and calculated values can be very easily communicated to higher-level systems or individual plant modules can be interconnected. For details, see Technical Information TI01180R

Documentation

- Operating Instructions 'iTEMP TMT71' with analog output 4 to 20 mA (BA01927T/09/en) and associated Brief Operating Instructions 'iTEMP TMT72, TMT71' (KA01414T/09) in hard copy
- Supplementary ATEX documentation:
  ATEX/IECEx: II1G Ex ia IIC T6...T4 Ga: XA01736T/09/a3
  ATEX II2G Ex d IIC: XA01007T/09/a3 (transmitter in field housing)
  ATEX II3G Ex ic IIC: XA01155T/09/a3
  ATEX II 3D, II 3G: XA01006T/09/a3



www.addresses.endress.com

Endress+Hauser

People for Process Automation