N 310 ECP

SKF Explorer

Dimensions

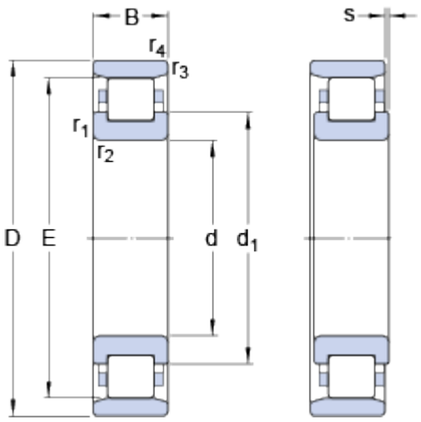

d		50	mm
D		110	mm
B		27	mm
d_1	≈	71.2	mm
E		97	mm
$r_{1,2}$	min.	2	mm
$r_{3,4}$	min.	2	mm
s	max.	1.9	mm

Abutment dimensions

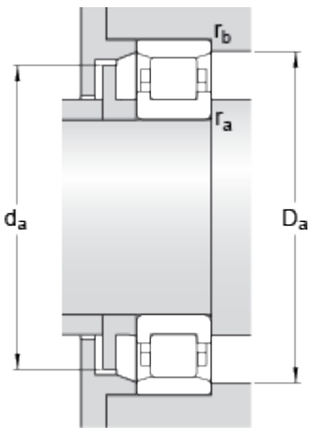

d_a	min.	60	mm
d_a	max.	95	mm
D_a	min.	99	mm
D_a	max.	101	mm
r_a	max.	2	mm
r_b	max.	2	mm

Calculation data

Basic dynamic load rating	C	127	kN
Basic static load rating	C_0	112	kN
Fatigue load limit	P_u	15	kN
Reference speed		6700	r/min
Limiting speed		8000	r/min
Calculation factor	k_r	0.12	
Limiting value	e	0.2	
Axial load factor	Y	0.6	

Mass

Mass bearing	1.11	kg