Connector P/N: 4855RBUHD3, 4505RBUHD3, 4694RBUHD3, 4855UHD3-EL

Crimp tool : BB3PHCT
Strip tool :

THREE PIECE CRIMP STYLE BNC INSTALLATION INSTRUCTIONS

Please refer to the latest version available online

Step 1

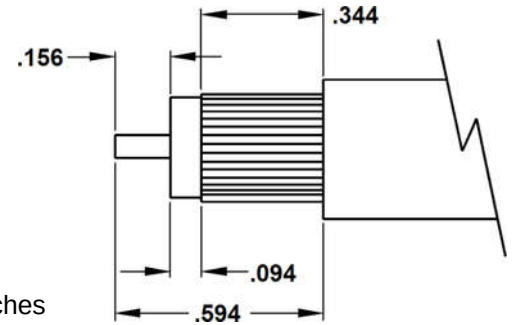

Dimensions are in inches

Prepare the cable according to step 1 to achieve the proper braid exposure and center conductor length. Slightly flair the braid away from the dielectric. Twist the foil tightly against the dielectric and verify there are no loose braid strands or foil touching the center conductor.

Tool setup

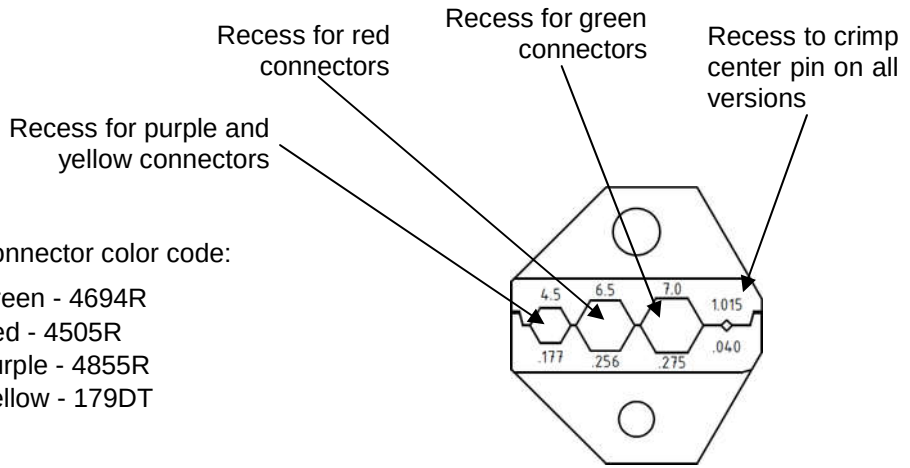

Connector color code:

Green - 4694R
Red - 4505R
Purple - 4855R
Yellow - 179DT

Note: Use 6.5mm/0.256 inch hex crimp for 4855UHD3-EL

The BB3PHCT hex crimp tool is configured with one die set for use with multiple Belden three piece hex connectors. Refer to the tool instructions for further details.

A preparation tool is used to prepare cables used with the Belden three piece hex connectors. Refer to the tool instruction sheet for further details.

Insert the center pin onto the center conductor and crimp in place with the tool

Step 2

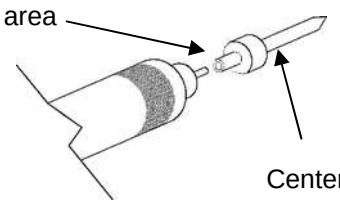

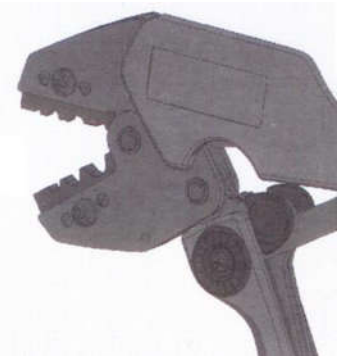

Step 3

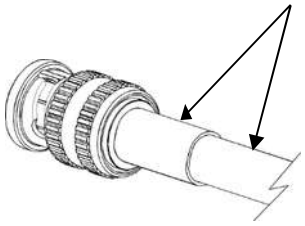

Leave the shield tape against the cable dielectric when inserting the cable into the connector.

Insert the shield tape and dielectric inside the tail of the connector body until the center pin is aligned to the inner ring.

Press the braid against the tail of the connector and slide the compression ring up against the back of the connector body as shown.

Center pin is aligned with inner ring once cable is in place

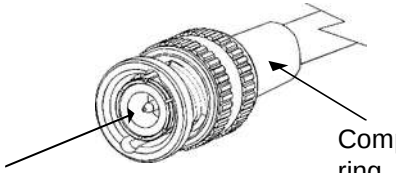

Step 4

With the connector fully installed on the cable, insert the compression ring into the proper crimp tool recess. Position the die so the hex crimp will be centered on the ring. Fully close the tool handle until the ratchet mechanism allows the tool to open. Once completed, the connector has been terminated as shown below.

