Installation- / Control Technique

Translation
of the original instructions

Input- / Output Module Analogue, For Modbus
UG 9461

0276162



Product Description

The universal input / output module UG 9461 has 8 analogue inputs and 2 analogue outputs. It can be used to connect thermocouples and thermistors and offers 2 configurable measuring inputs. Via Modbus the input status can be read and the output status can be set. For the analogue outputs a DC 0 ... 10 V interface is available.

Your Advantages

- Widely used measuring and automation protocol
- Compact structure
- Easy installation
- Easy appliance
- Pluggable clamps
- TWIN- connection terminals to loop auxiliary supply and Bus

Features

- According to IEC/EN 61131-2
- Modbus RTU-interface
- 2 configurable analogue inputs: 0 … 10 V, 0… 20 mA
- 2 K-Thermal element inputs
- 4 Thermistor inputs for Pt1000 sensors
- 2 Analogue outputs: 0 … 10 V
- 3 potentiometer for setting the modbus adress and baud rate
- 13 LEDs for status indication
- Width: 22.5 mm

Approvals and Markings

CE

Circuit Diagram

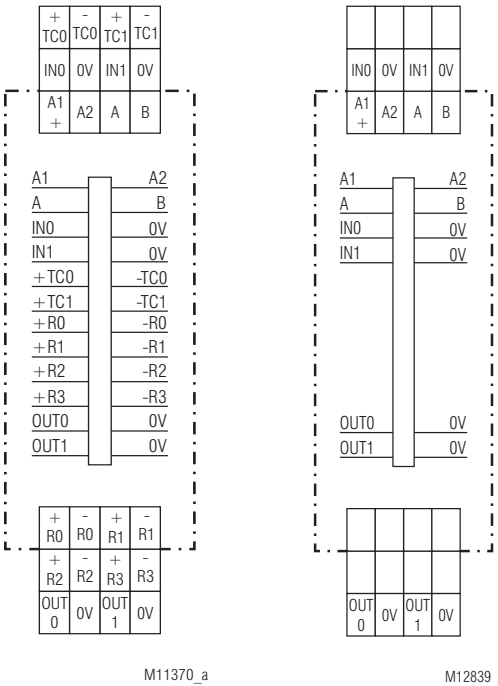

UG 9461

UG 9461/100

Applications

The universal Input / Output module UG 9461 is used to collect Temperature and other analogue values. Via the analogue outputs voltage signals of DC 0 ... 10 V can be offered to be used in connected systems. The analogue outputs are partly configurable.

Connection Terminals

Terminal designation	Signal description
A1 (+)	Auxiliary voltage + DC 24 V
A2	Auxiliary voltage 0 V
A	Modbus signal A
B	Modbus signal B
IN_0 ,IN_1	Analogue input +
0V	Analogue input ground
$+TC_0$, $+TC_1$	Thermal element +
$-TC_0$, $-TC_1$	Thermal element -
$+R_0$ ... $+R_3$	Thermistor +
$-R_0$ ... $-R_3$	Thermistor -
OUT_0, OUT_1	Analogue output +
0V	Analogue output ground

All technical data in this list relate to the state at the moment of edition. We reserve the right for technical improvements and changes at any time.

Indicators

Green LED "On": Perm. on - Supply connected

Red LED "ERR": Flashing - Failure code of the device

Yellow LED "Bus": Flashing - When receiving or transmitting Modbus data

Yellow status-LEDs
"IN_0 IN_1 TC_0 TC_1, R_0 R_1, R_2 R_3
OUT_0 OUT_1":
On , when on a connected analogue input or output a valid signal is available.

Failure code:
9 - Modbus communication failure
10 - Checksum failure EEPROM

9*) - 10*) = Number of flashing pulses in sequence

Reset Function

By sending a reset command a reset can be operated via Modbus.

Modbus RTU

For communication between input / output module and a supervising control the Modbus RTU protocol according to Specification V 1.1b3 is used.

Setting

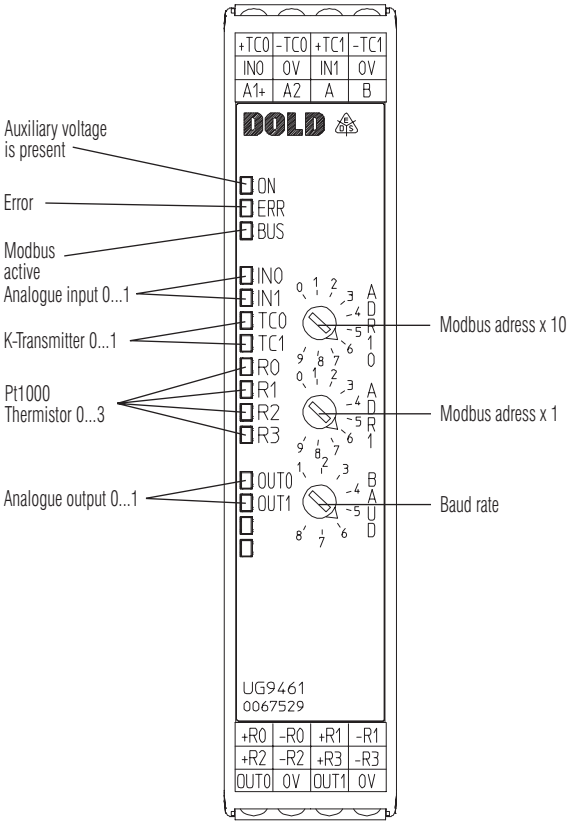

M12521

Position Potentiometer BAUD	1	2	3	4	5	6	7	8
Baud rate Baud	1200	2400	4800	9600	19200	38400	57600	115200
Response Time	< 50 ms	< 25 ms	< 12 ms	< 10 ms	< 5 ms	< 5 ms	< 5 ms	< 5 ms

Technical Data

Auxiliary voltage

Auxiliary voltage U_H A1/A2: DC 24 V
Voltage range: 0.8 ... 1.1 U_H
Nominal consumption: 2 W DC 24 V

Inputs

Inputs	0 ... 10 V, 0 ... 20 mA configurable	Pt 1000 Thermistor meas. current 0.25 mA	K-transmitter
Measuring range:	0.1 ... 19.90 mA 0.050 ... 9.950 V	- 50 °C ... + 200 °C	- 180 °C ... + 1350 °C
Resolution internal	10 bit	24 bit	24 bit
Accuracy at 25 °C:	3 % v. E.	± 0.5 °C	± 0.5 °C *)
Measuring principle:	Integrating	Integrating	Integrating
Update time	4 ms	650 ms	650 ms
Input resistance temperature:		≥ 1 MΩ	≥ 1 MΩ
Input resistance voltage:	≥ 100 kΩ		
Input resistance current:	500 Ω		
Sensor wire break detection:	-	Yes	Yes
Connection:	2-wire-technology	2-wire-technology	2-wire-technology
Noise suppression:	-	70 dB at 50 Hz / 60Hz	70 dB at 50 Hz / 60Hz
Voltage input max. input voltage:	DC 15 V		
Current input max. input current:	DC 30 mA		

*) The internal failure on the cold connection spot is ± 3.0 °C. This has to be added to the accuracy measured value in the table.

Please note that the tolerance values are only valid after a time period of > 15 min when the unit is warmed up. Also ventilation changes on the terminals of the thermocouples can cause measuring faults.
When the PT 1000 temperature sensor is missing the maximum positive temperature is indicated in the corresponding measured value Modbus register.
If the thermocouple is missing, the minimum negative temperature is indicated in the corresponding measured value Modbus.
The measuring failure on PT1000 inputs caused by line resistance is approx. 0.4 °C at 2 x 1 Ω wire resistance.

Outputs DC 0 ... 10 V

Voltage range: DC 0 ... 10 V, short circuit proof
Resolution: 10 bit
Regulating time: 100 ms (95 % of the new value)
Accuracy: ± 1 % of end value
Load impendance: ≥ 2000 Ω

Technical Data

General Data

Operating mode: Continuous operation
Operation: - 20 ... + 50 °C
Storage: - 40 ... + 70 °C
Relative air humidity: 93 % at 40 °C
Altitude: ≤ 2000 m
EMC

Electrostatic discharge:	8 kV (air)	IEC/EN 61000-4-2
HF-irradiation		
80 MHz ... 1.0 GHz:	10 V / m	IEC/EN 61000-4-3
1.0 GHz ... 2.5 GHz:	3 V / m	IEC/EN 61000-4-3
2.5 GHz ... 2.7 GHz:	1 V / m	IEC/EN 61000-4-3
Fast transients:	2 kV	IEC/EN 61000-4-4
Surge voltage between		
wires for power supply:	1 kV	IEC/EN 61000-4-5
Between wire and ground:	1 kV	IEC/EN 61000-4-5
HF wire guided:	10 V	IEC/EN 61000-4-6
Voltage dips		IEC/EN 61000-4-11

Interference emission

Wire guided:	Limit value class B	IEC/EN 61131-2
Radio irradiation:	Limit value class B	IEC/EN 61131-2

Degree of protection

Housing:	IP 40	IEC/EN 60529
Terminals:	IP 20	IEC/EN 60529

Housing: Thermoplastic with V0 behaviour according to UL subject 94
Vibration resistance: Amplitude constant 3.5 mm, Frequency 5 ... 8.4 Hz, Acceleration constant 1.0 g Frequency 8.4 Hz ... 150 Hz IEC/EN 61131-2
Climate resistance: 20 / 050 / 04 IEC/EN 60068-1
Wire connection: DIN 46228-1/-2/-3/-4
Pluggable cage clamp terminals (PC): 0.25 ... 1.5 mm² solid or 0.25 ... 1.5 mm² stranded wire with sleeve
Insulation of wires or sleeve length: 12 mm
Wire connection:
Bus and auxiliary supply pluggable Twin-cage-clamp-terminal (PT): 0.25 ... 1.5 mm² solid or 0.25 ... 1.5 mm² stranded ferruled
Insulation of wires or sleeve length: 8 mm
Mounting: DIN rail IEC/EN 60715
Weight: 220 g

Dimensions

Width x height x depth: 22.5 x 105 x 120.3 mm

Standard Type

UG 9461PM DC 24 V 8 AI / 2 AO
Article number: 0067529
- With Modbus RTU interface
- 8 analogue inputs
- 2 analogue outputs
- Auxiliary voltage U_H: DC 24 V
- Width: 22.5 mm

Variants

UG 9461PM / _ 0 0

0 Standard
1 2 AI / 2 AO; without PT1000 inputs, without K thermocouple inputs

Setting Facilities

Potentiometer ADR10: - Unit adress x 10

Potentiometer ADR1: - Unit adress x 1

Potentiometer BAUD: - Baud rate

The module address and baud rate is only read after connecting the auxiliary supply!

Setting and Adjustment

Set-up procedure

1. Connect device according to application example.
2. Setting unit adress and Baud rate via potentiometer.
3. Power up the unit.
4. Parametrization via Modbus.

Safety Notes

- Never clear a fault when the device is switched on
- The user must ensure that the device and the necessary component are mounted and connected according to the locally applicable regulations and technical standards (VDE, TÜV,BG).
- Adjustments may only be carried out by qualified specialist staff and the applicable safety rules must be observed.
- Touch proof security is only provided when the power connection terminals are plugged into the unit.

Bus Interface

Protocol	Modbus Seriell RTU
Adress	1 bis 99
Baudrate	1200, 2400, 4800, 9600, 19200, 38400, 57600, 115200 Baud
Data bit	8
Stop bit	2
Parity	None

More information about the interface, wiring rules, device identification and communication monitoring can be found in the Modbus user manual.

Function-Codes

At UG 9461 the following function codes are implemented:

Function-Codes	Name	Description
0x03	Read Holding Register	Device parameter read word by word
0x04	Read Input Register	Actual values read word by word
0x05	Write Single Coil	Outputs write induvidually
0x06	Write Single Register	Device parameter write word by word
0x10	Write Multiple Register	Device parameter write in blocks

Device configuration

If required the device configuration data can be saved permanently by setting the the Bit "Write configuration to EEPROM". The data is copied from the EEPROM to the relevant register when connecting the auxiliary voltage. As the numbers of write cycles of an EEPROM are limited, the writing must not be done in cycles. In addition it is not possible to receive modbus telegrams during a period of 50 ms while writing the EEPROM.

Application Examples

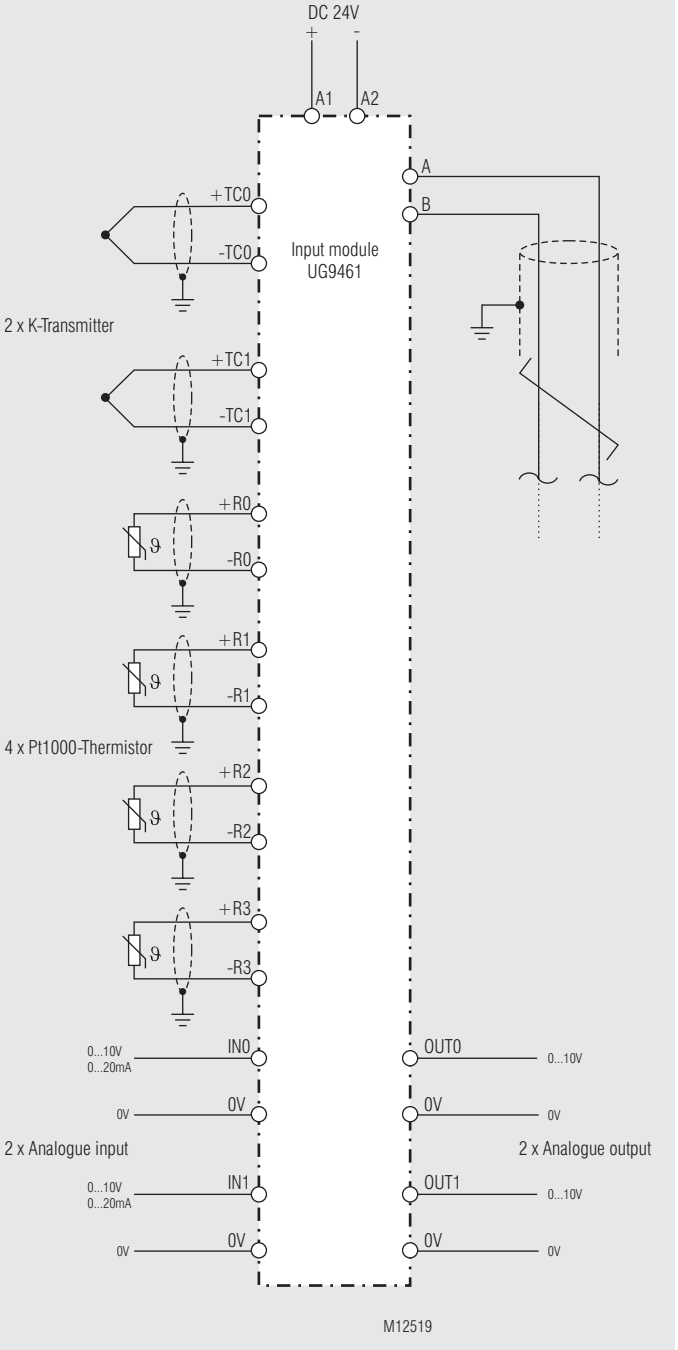

Parameter tables

Every slave owns an output- configuration- and actual value table. In these tables it is defined under which address the parameters can be found.

Coils:

Register address	Protocol address	Name	Value range	Initial value	Description	Data type	Access rights
1	0	Reset	0x0000		No function Device reset	BIT	Reset
2	1	Write configuration to EEPROM	0x0000		No function Save parameter	BIT	Write configuration to EEPROM

Input Registers:

Register address	Protocol address	Name	Value range	Description	Data type	Access rights
30001	0	Device failure	0 … 10	0: No failure 9: Communication fault Modbus 10: Checksum failure EEPROM	INT16	Read
30002	1	Device state	0 … 2	0: Device initialize 1: Device ready 2: Error mode	INT16	Read
30003	2	Analogue input 0	0 … 10000 0 … 20000	mV uA	INT16	Read
30004	3	Analogue input 1	0 … 10000 0 … 20000	mV uA	INT16	Read
30005	4	Thermal element 0	- 1800 … 1350	1 / 10 °C	INT16	Read
30006	5	Thermal element 1	- 1800 … 1350	1 / 10 °C	INT16	Read
30007	6	Thermistor 0	- 500 … 2000	1 / 10 °C	INT16	Read
30008	7	Thermistor 1	- 500 … 2000	1 / 10 °C	INT16	Read
30009	8	Thermistor 2	- 500 … 2000	1 / 10 °C	INT16	Read
30010	9	Thermistor 3	- 500 … 2000	1 / 10 °C	INT16	Read
30011	10	Sensor state	0 … 255	Bit 7 = 1, input IN0 o.k. Bit 6 = 1, input IN1 o.k. Bit 5 = 1, sensor TC0 o.k. Bit 4 = 1, sensor TC1 o.k. Bit 3 = 1, sensor RTD0 o.k. Bit 2 = 1, sensor RTD1 o.k. Bit 1 = 1, sensor RTD2 o.k. Bit 0 = 1, sensor RTD3 o.k.	INT16	Read
30012	11	Cold junction-compensation	- 500 … 2000	1 / 10 °C	INT16	Read
30013	12	IC-4-Temperature	- 500 … 2000	1 / 10 °C	INT16	Read

Parameter tables

Input Registers - variant /100:

Register address	Protocol address	Name	Value range	Description	Data type	Access rights
30001	0	Device failure	0 … 10	0: No failure 9: Communication fault Modbus 10: Checksum failure EEPROM	INT16	Read
30002	1	Device state	0 … 2	0: Device initialize 1: Device ready 2: Error mode	INT16	Read
30003	2	Analogue input 0	0 … 10000 0 … 20000	mV uA	INT16	Read
30004	3	Analogue input 1	0 … 10000 0 … 20000	mV uA	INT16	Read
30005	4	Reserved	0		INT16	Read
30006	5	Reserved	0		INT16	Read
30007	6	Reserved	0		INT16	Read
30008	7	Reserved	0		INT16	Read
30009	8	Reserved	0		INT16	Read
30010	9	Reserved	0		INT16	Read
30011	10	Sensor state	0 … 255	Bit 7 = 1, input IN0 o.k. Bit 6 = 1, input IN1 o.k. Bit 5 = 0, reserved Bit 4 = 0, reserved Bit 3 = 0, reserved Bit 2 = 0, reserved Bit 1 = 0, reserved Bit 0 = 0, reserved	INT16	Read
30012	11	Reserved	0		INT16	Read
30013	12	Reserved	0		INT16	Read

Holding Registers:

Register address	Protocol address	Name	Value range	Initial value	Description	Data type	Access rights
40001	0	Control word 1	0 … 2	0	Bit 0 = Reset Bit 1 = Write configuration to EEPROM	UINT16	Write / read
40002	1	Analogue input 0 configure	0 … 1 *)	0	0 = 0 … 10000 mV 1 = 0 … 20000 µA	UINT16	Write / read
40003	2	Analogue input 0 configure	0 … 1 *)	0	0 = 0 … 10000 mV 1 = 0 … 20000 µA	UINT16	Write / read
40004	3	Analogue output 0	0 … 10000	0	Voltage in mV	UINT16	Write / read
40005	4	Analogue output 1	0 … 10000	0	Voltage in mV	UINT16	Write / read
40006	5	Timeout release	0 … 1	0	Bit 0 = Enable	UINT16	Write / read
40007	6	Timeout	100 … 10000 0 ... 10000	1000	Timeout value in ms (write) Timeout value in ms (read)	UINT16	Write / read

*) Parameters can be stored permanently in the EEPROM by setting the Bit "Write configuration to EEPROM"