MURR ELEKTRONIK
stay connected

M12 female 0° A-cod. with cable

PUR 5x0.34 bk UL/CSA+drag ch. 1.5m

Female straight
M12, 5-pole
A-coded
Art-No. 7005 - M12 Lite - (plastic hexagonal screw) on request
Plastic housings with good resistance against chemicals and oils.
The resistance to aggressive media should be individually tested for your application. Further details on request.
Further cable lengths on request.

Link to Product

Illustration

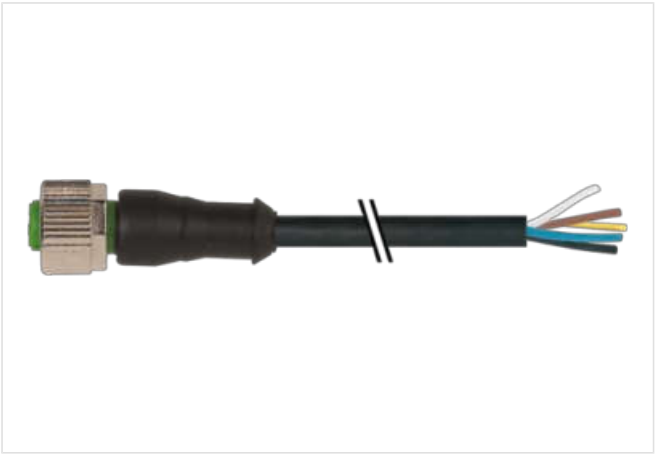

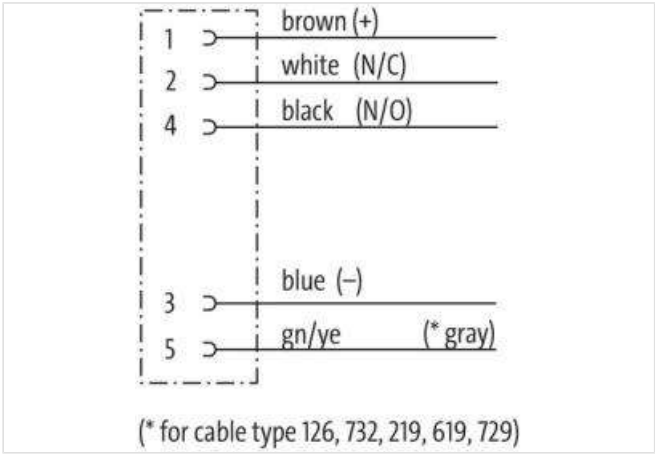

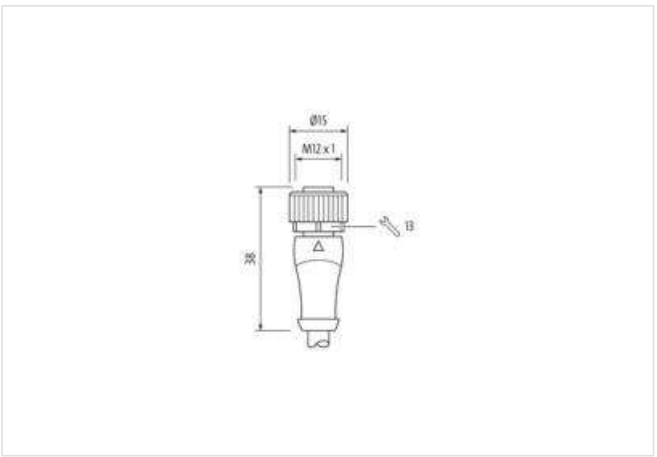

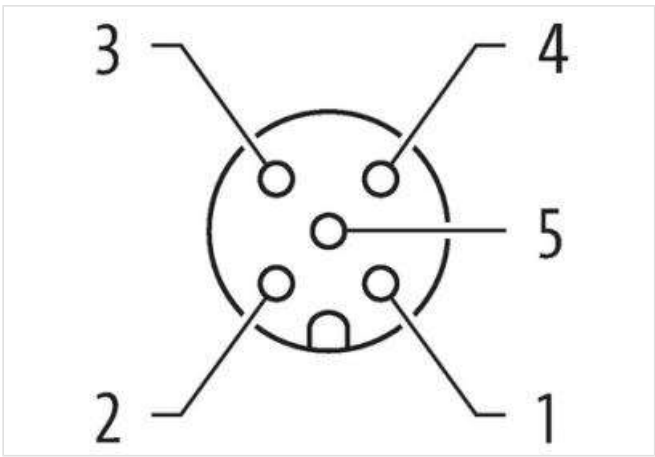

Product may differ from Image

Cable length	1,5 m

Side 1

Tightening torque	0,6 Nm

The information in this Product-PDF has been compiled with the utmost care.
Liability for the correctness completeness and topicality of the information is restricted to gross negligence. Version: 2024-03-14

Mounting method	inserted, screwed
Coating contact	gold plated
Family construction form	M12
Thread	M12 x 1
suitable for corrugated tube (internal Ø)	10 mm
Coding	A
Material contact	Copper alloy
Material	PUR
No. of poles	5
Width across flats	SW13
Degree of protection (EN IEC 60529)	IP65, IP66K, IP67
Side 2	
Stripping length (jacket)	20 mm
Coating contact	gold plated
Commercial data	
ECLASS-6.0	27279218
ECLASS-7.0	27279218
ECLASS-8.0	27279218
ECLASS-9.0	27060311
ECLASS-10.1	27060311
ECLASS-11.1	27060311
ECLASS-12.0	27060311
ETIM-5.0	EC001855
customs tariff number	85444290
GTIN	4048879210911
Packaging unit	1
Electrical data | Supply	
Operating voltage AC max.	125 V
Operating voltage DC max.	125 V
Operating voltage AC (UL-listed)	30 V
Operating voltage DC (UL-listed)	30 V
Current operating per contact max.	4 A
Diagnostics	
Status indication LED	no
Installation | Connection	
Stripping length (jacket)	20 mm
Mounting set	M12 x 1
Device protection | Electrical	
Additional condition protection degree	inserted, screwed
Pollution Degree	3
Rated surge voltage	1,5 kV
Material group (IEC 60664-1)	I
Mechanical data | Material data	
Coating locking	Nickeled
Coating of fitting	nickel plated
Material gasket	FKM
Locking material	Zinc die-casting
Material screw connection	Zinc die-casting
Mechanical data | Mounting data	
Mounting method	inserted, screwed, Shaking protection
Environmental characteristics | Climatic	

The information in this Product-PDF has been compiled with the utmost care.
Liability for the correctness completeness and topicality of the information is restricted to gross negligence. Version: 2024-03-14

MURR ELEKTRONIK
stay connected

Operating temperature min.	-25 °C
Operating temperature max.	85 °C
Additional condition temperature range	depending on cable quality
Conformity	
Product standard	DIN EN 61076-2-101 (M12)
Installation | Cable	
Cable identification	635
Cable Type	3
Jacket Color	black
Type of Certificate	cURus
Amount stranding	1
Stranding	5 wires around Core filler twisted
Filler	yes
wire arrangement	brown, black, blue, white, green-yellow
Cable weigth	41,8 g/m
Material jacket	PUR
Shore hardness jacket	90 ± 5 Shore A
Freedom from ingredients (jacket)	lead-free, cadmium-free, CFC-free, halogen-free, silicone-free
Outer-diameter (jacket)	4,8 mm
Tolerance outer diameter (sheath)	± 5 %
Material wire insulation	PP
Amount wires	5
Outer diameter insulation	1,25 mm
Outer diameter tolerance core insulation	± 5 %
Shore hardness wire insulation	70 ± 5 Shore D
Ingredient freeness wire insulation	lead-free, cadmium-free, CFC-free, halogen-free, silicone-free
Amount strands (wire)	42
Diameter of single wires	0,1 mm
Conductor crosssection (wire)	0,34 mm²
Material conductor wire	Stranded copper wire, bare
Conductor type (wire)	strand class 6
No. of bending cycles (C-track)	10 Mio. @ 25 °C
Traversing distance (C-track)	10 m @ 25 °C | horizontal
Current load capacity (standard)	to DIN VDE 0298-4
Current load capacity min. wire	4,5 A
Electrical resistance line constant wire	57 Ω/km @ 20 °C
Nominal voltage power AC max.	300 V
Power frequency withstand voltage power (wire - jacket)	2,5 kV @ 60 s
AC withstand voltage power (wire - wire)	2,5 kV @ 60 s
Min. operating temperature (static)	-40 °C
Max. operating temperature (fixed)	80 °C / 90 °C @ 10000 h Operation
Operating temperature min. (dynamic)	-25 °C
Operating temperature max. (dynamic)	80 °C / 90 °C @ 10000 h Operation
UV resistance	DIN EN ISO 4892-2 A
Flame resistance	UL 1581 § 1100 FT2 | UL 1581 § 1090 | IEC 60332-2-2
chemical resistance	Good, application-related testing
Gasoline resistance	Good, application-related testing
Oil resistance	Good, application-related testing | DIN EN 60811-404
Bending radius (fixed)	5 x Outer diameter
Bending radius (dynamic)	10 x Outer diameter
No. of torsion cycles	2 Mio.
Torsion speed	35 cycles/min
Torsion stress	± 180 °/m

The information in this Product-PDF has been compiled with the utmost care.
Liability for the correctness completeness and topicality of the information is restricted to gross negligence. Version: 2024-03-14

MURR ELEKTRONIK
stay connected

The information in this Product-PDF has been compiled with the utmost care.
Liability for the correctness completeness and topicality of the information is restricted to gross negligence. Version: 2024-03-14

Murrelektronik GmbH | Falkenstraße 3 | 71570 Oppenweiler | Fon +49 (71 91) 47-0 | Fax +49 (71 91) 47-491000 | shop@murrelektronik.com | shop.murrelektronik.com