The Timken Company
4500 Mt Pleasant St. NW
N. Canton, OH 44720
Phone: (234) 262-3000
E-Mail: CustomerCAD@timken.com • **Web site:** www.timken.com

Timken Part Number M84548 - M84510, Tapered Roller Bearings - TS (Tapered Single) Imperial

This is the most basic and most widely used type of tapered roller bearing. It consists of two main separable parts: the cone (inner ring) assembly and the cup (outer ring). It is typically mounted in opposing pairs on a shaft.



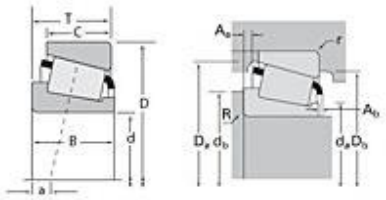

Specifications | Dimensions | Abutment and Fillet Dimensions | Basic Load Ratings | Factors

Specifications

Series	M84500
Cone Part Number	M84548
Cup Part Number	M84510
Design Units	Imperial
Bearing Weight	0.50 lb 0.200 Kg
Cage Type	Stamped Steel

Dimensions

d - Bore	1.0000 in 25.400 mm
D - Cup Outer Diameter	2.2500 in 57.150 mm

B - Cone Width	0.7650 in 19.431 mm
C - Cup Width	0.5800 in 14.732 mm
T - Bearing Width	0.7650 in 19.431 mm

Abutment and Fillet Dimensions

R - Cone Backface "To Clear" Radius[1]	0.060 in 1.520 mm
r - Cup Backface "To Clear" Radius[2]	0.060 in 1.52 mm
da - Cone Frontface Backing Diameter	1.30 in 33.02 mm
db - Cone Backface Backing Diameter	1.52 in 38.61 mm
Da - Cup Frontface Backing Diameter	2.17 in 55.10 mm
Db - Cup Backface Backing Diameter	1.91 in 48.51 mm
Ab - Cage-Cone Frontface Clearance	0.07 in 1.8 mm
Aa - Cage-Cone Backface Clearance	0.03 in 0.8 mm
a - Effective Center Location[3]	-0.12 in -3.00 mm

Basic Load Ratings

C90 - Dynamic Radial Rating (90 million revolutions)[4]	2830 lbf 12600 N
C1 - Dynamic Radial Rating (1 million revolutions)[5]	10900 lbf 48500 N
C0 - Static Radial Rating	11900 lbf 52900 N
C_{a90} - Dynamic Thrust Rating (90 million revolutions)[6]	2640 lbf 11800 N

Factors

K - Factor[7]	1.07
e - ISO Factor[8]	0.55
Y - ISO Factor[9]	1.1
G1 - Heat Generation Factor (Roller-Raceway)	11.3
G2 - Heat Generation Factor (Rib-Roller End)	7.39
Cg - Geometry Factor	0.0644

[1] These maximum fillet radii will be cleared by the bearing corners.
[2] These maximum fillet radii will be cleared by the bearing corners.
[3] Negative value indicates effective center inside cone backface.
[4] Based on 90 x 10^6 revolutions L_{10} life, for The Timken Company life calculation method. C_{90} and C_{a90} are radial and thrust values.
[5] Based on 1 x 10^6 revolutions L_{10} life, for the ISO life calculation method.
[6] Based on 90 x 10^6 revolutions L_{10} life, for The Timken Company life calculation method. C_{90} and C_{a90} are radial and thrust values for a single-row, $C_{90(2)}$ is the two-row radial value.
[7] These factors apply for both inch and metric calculations. Consult your Timken representative for instruction on use.
[8] These factors apply for both inch and metric calculations. Consult your Timken representative for instruction on use.
[9] These factors apply for both inch and metric calculations. Consult your Timken representative for instruction on use.

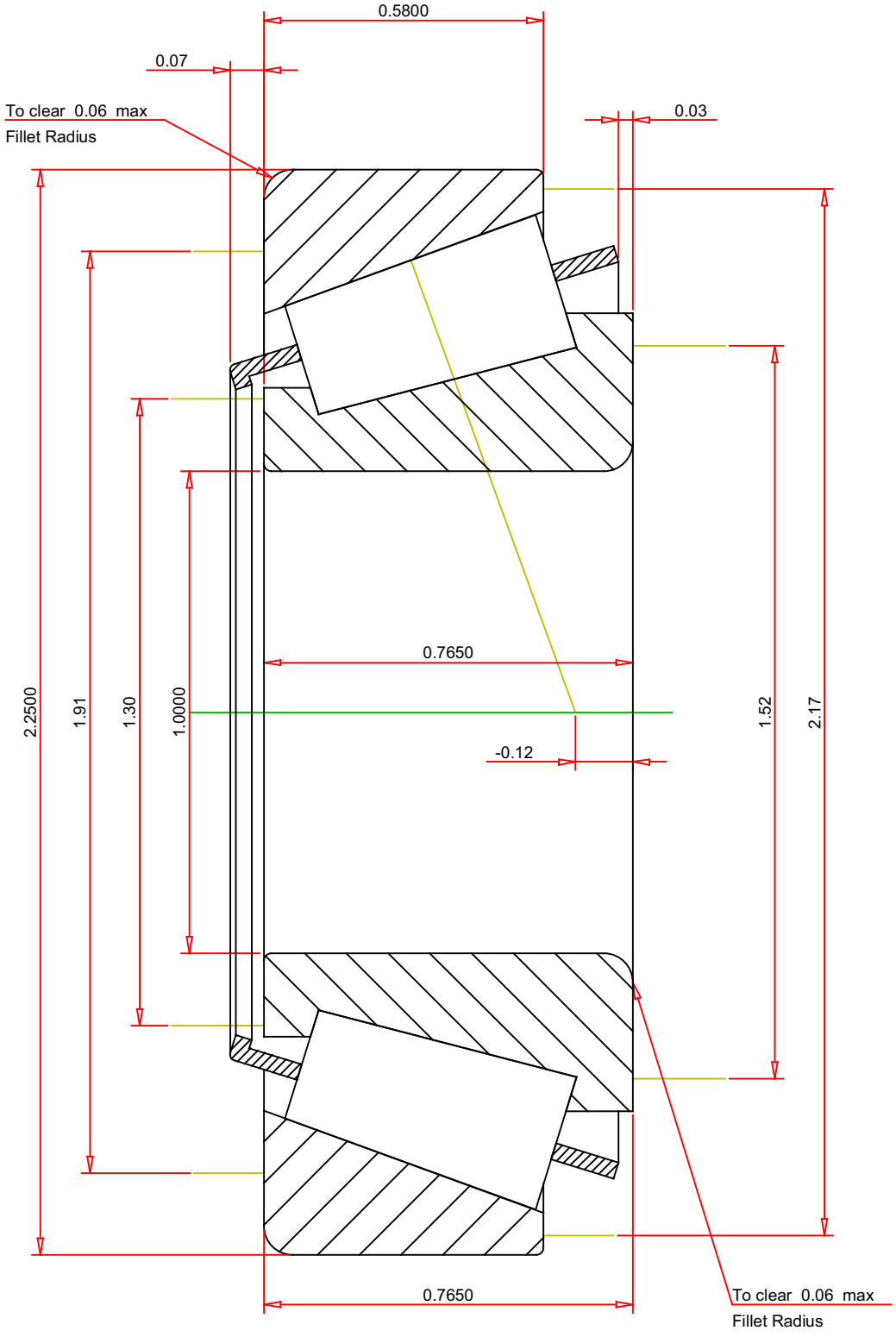

IMPERIAL UNITS

ISO Factor - e	0.55	
ISO Factor - Y	1.1	
Bearing Weight	0.5	lb
Number of Rollers Per Row	16	
Effective Center Location	-0.12	inch

TIMKEN®

THE TIMKEN COMPANY
NORTH CANTON, OHIO USA

M84548 - M84510
TS BEARING ASSEMBLY

K Factor	1.07	
Dynamic Radial Rating - C90	2830	lbf
Dynamic Thrust Rating - Ca90	2640	lbf
Static Radial Rating - C0	11900	lbf
Dynamic Radial Rating - C1	10900	lbf

Every reasonable effort has been made to ensure the accuracy of the information contained in this writing, but no liability is accepted for errors, omissions or for any other reason.

FOR DISCUSSION ONLY