JUMO GmbH & Co. KG
Delivery address: Mackenrodtstraße 14
36039 Fulda, Germany
Postal address: 36035 Fulda, Germany
Phone: +49 661 6003-0
Fax: +49 661 6003-607
E-mail: mail@jumo.net
Internet: www.jumo.net

JUMO Instrument Co. Ltd.
JUMO House
Temple Bank, Riverway
Harlow, Essex CM20 2DY, UK
Phone: +44 1279 635533
Fax: +44 1279 635262
E-mail: sales@jumo.co.uk
Internet: www.jumo.co.uk

JUMO Process Control, Inc.
8 Technology Boulevard
Canastota, NY 13032, USA
Phone: 315-697-5866
1-800-554-JUMO
Fax: 315-697-5867
E-mail: info@jumo.us
Internet: www.jumo.us

JUMO tecLine CR
Electrolytic Conductivity Cells in stainless steel or titanium

202924 Series (formerly 2 EL6... Series)

- 2-electrode system
- for ranges from 0.05 µS/cm to 1 mS/cm
- large variety of process connections
- rugged construction
- version for pharmaceutical requirements can be supplied
- shaft diameter 16 mm (with version 202924/20-...)



Type 202924/10-XXXX-1003-105-37-88-26

Brief description

Conductivity cells are used in conjunction with conductivity transmitters for determining the electrolytic conductivity in liquids. The materials used for the cells are physiologically safe and conform to FDA requirements.
JUMO conductivity cells in the 202924 series can be used in areas such as: pure and high-purity water applications, pharmaceutical and chemical industries, food processing technology, chip manufacture, ion exchangers or reverse osmosis plants.

Conductivity cells that **meet pharmaceutical requirements** can be delivered with a surface roughness of <0.8µ, if so requested. A standard factory test certificate to EN10 204-3.1B is included in the delivery. The electrodes are individually packed in film.

A special conductivity cell is available for **high-temperature applications**. This cell can be operated at media temperatures up to 200°C and a maximum pressure of 17 bar.



Type 202924/20-XXXX-1003-613-83-31-31

Principle of operation

The measuring cells in the 292924 series are 2-electrode cells. An a.c. voltage is applied through a transmitter. The current flowing through the liquid and the electrodes is determined by the conductivity of the liquid.



Type 202924/30-00XX-1005-997-83-31-31

JUMO GmbH & Co. KG
Delivery address: Mackenrodtstraße 14
36039 Fulda, Germany
Postal address: 36035 Fulda, Germany
Phone: +49 661 6003-0
Fax: +49 661 6003-607
E-mail: mail@jumo.net
Internet: www.jumo.net

JUMO Instrument Co. Ltd.
JUMO House
Temple Bank, Riverway
Harlow, Essex CM20 2DY, UK
Phone: +44 1279 635533
Fax: +44 1279 635262
E-mail: sales@jumo.co.uk
Internet: www.jumo.co.uk

JUMO Process Control, Inc.
8 Technology Boulevard
Canastota, NY 13032, USA
Phone: 315-697-5866
1-800-554-JUMO
Fax: 315-697-5867
E-mail: info@jumo.us
Internet: www.jumo.us

Technical data

Cell constant[a]:	K = 0.01 cm^{-1} or K = 0.1 cm^{-1}
Typical measuring ranges[b]:	0.1 to 20 MΩcm or 0.05 to 10 µS/cm (for K = 0.01) or 1 µS to 1 mS/cm (for K = 0.1)
Temperature compensation:	with Pt100 or Pt1000 or 2× Pt100 (twin Pt100)
Process connection:	thread G 1/2, G 3/4“, G 1“, NPT 3/4, NPT1/2, milk cone DN 25, clamp DN 25, clamp DN 50
Body material:	PVDF (standard); stainless steel 1.4435 (optional), stainless steel 1.4571 (optional), stainless steel 1.4404 for high-temperature version, PEEK (optional)
Cell material:	stainless steel 1.4571 (standard), stainless steel 1.4435 (optional), stainless steel 1.4404 for high-temperature version, titanium (optional)
Operating temperature:	Type 202924/10: up to 135 °C; high-temperature version: up to 200 °C Type 202924/20: up to 135 °C Type 202924/30 ... 31: up to 135 °C (standard operation) Type 202924/30 ... 31: up to 150 °C (sterilization, max. 45 min.)
Maximum pressure:	Type 202924/10: 16 bar at 25 °C or 9 bar at 60 °C; high-temperature version: 40 bar at 25 °C or 17 bar at 200 °C Type 202924/20: 16 bar at 25 °C or 1 bar at 135 °C Type 292924/30 ... 31: 9 bar at 25 °C or 5 bar at 150 °C, max. 45 min.
Optional certificates:	factory certificate to EN 10204 2.1, EN 10204 2.2, EN 10204 3.1 (material, roughness)
ASTM test certificate:	determination of the precisely measured cell constant according to ASTM D1125-95 and ASTM D5391-99 (1-point calibration)
FDA approved:	the plastic materials used (insulator and O-rings) are FDA-listed

a. Depending on the production conditions, the cell constant can deviate by ±10 % from the nominal value. This deviation can be compensated at the transmitter.
b. The measuring ranges also depend on the transmitter used.
When used for wider ranges than the "typical" ones, measurement errors caused by polarization may occur.

JUMO GmbH & Co. KG
Delivery address: Mackenrodtstraße 14
36039 Fulda, Germany
Postal address: 36035 Fulda, Germany
Phone: +49 661 6003-0
Fax: +49 661 6003-607
E-mail: mail@jumo.net
Internet: www.jumo.net

JUMO Instrument Co. Ltd.
JUMO House
Temple Bank, Riverway
Harlow, Essex CM20 2DY, UK
Phone: +44 1279 635533
Fax: +44 1279 635262
E-mail: sales@jumo.co.uk
Internet: www.jumo.co.uk

JUMO Process Control, Inc.
8 Technology Boulevard
Canastota, NY 13032, USA
Phone: 315-697-5866
1-800-554-JUMO
Fax: 315-697-5867
E-mail: info@jumo.us
Internet: www.jumo.us

Dimensions

Type 202924/10...

Electrical connections

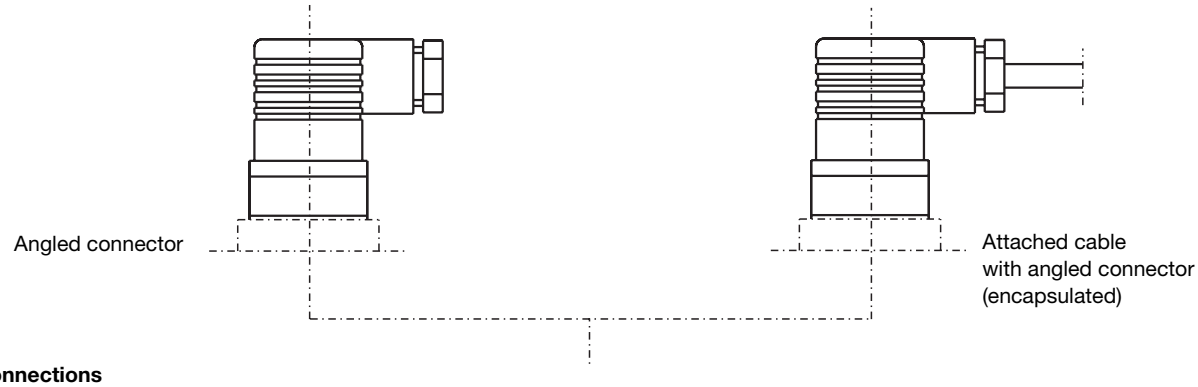

Process connections

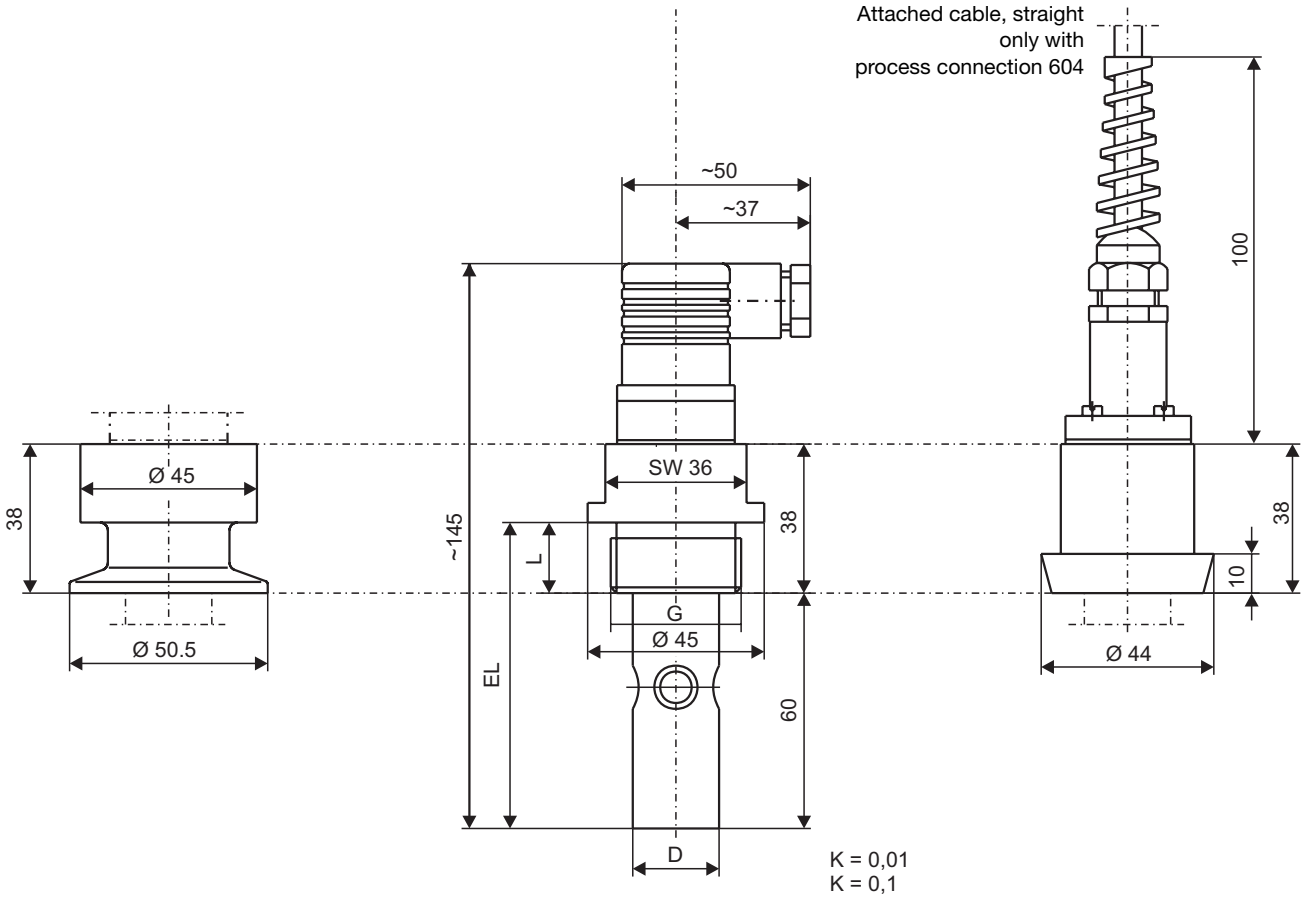

Clamp DN 25

Thread

MK DN 25
(milk cone to DIN 11851)
(EL = 60 mm)

G (thread)	L	Shaft diameter D	EL (fitting length)
NPT3/4-14	20	23.8	80
G 1 A	18	22	78
G 3/4 A	16	22	76
G 1/2 A	14	16	74

JUMO GmbH & Co. KG
Delivery address: Mackenrodtstraße 14
36039 Fulda, Germany
Postal address: 36035 Fulda, Germany
Phone: +49 661 6003-0
Fax: +49 661 6003-607
E-mail: mail@jumo.net
Internet: www.jumo.net

JUMO Instrument Co. Ltd.
JUMO House
Temple Bank, Riverway
Harlow, Essex CM20 2DY, UK
Phone: +44 1279 635533
Fax: +44 1279 635262
E-mail: sales@jumo.co.uk
Internet: www.jumo.co.uk

JUMO Process Control, Inc.
8 Technology Boulevard
Canastota, NY 13032, USA
Phone: 315-697-5866
1-800-554-JUMO
Fax: 315-697-5867
E-mail: info@jumo.us
Internet: www.jumo.us

Type 202924/20... (16 mm dia.)

All process connections shown here can be combined w the electrical connections.

Electrical connections

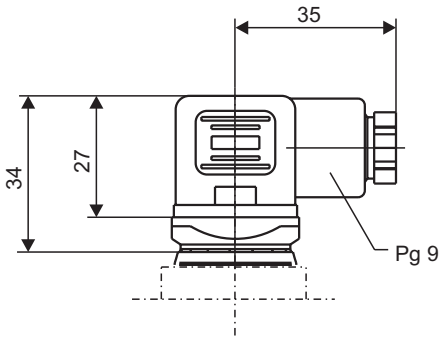

Angled connector

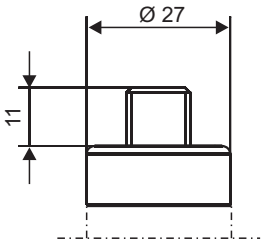

M12 connector

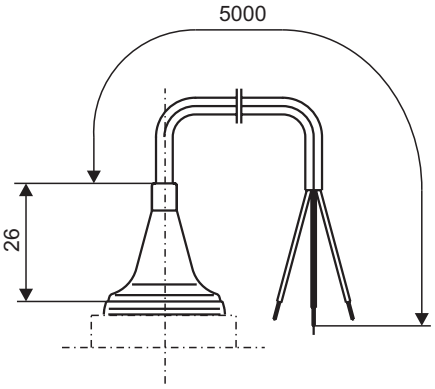

Attached cable

Process connections

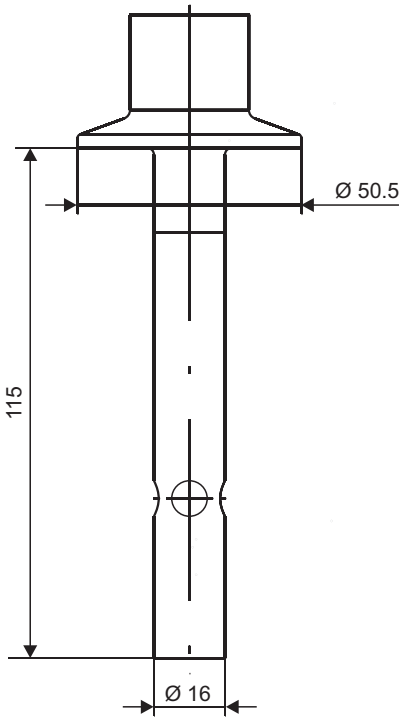

Clamp DN 25

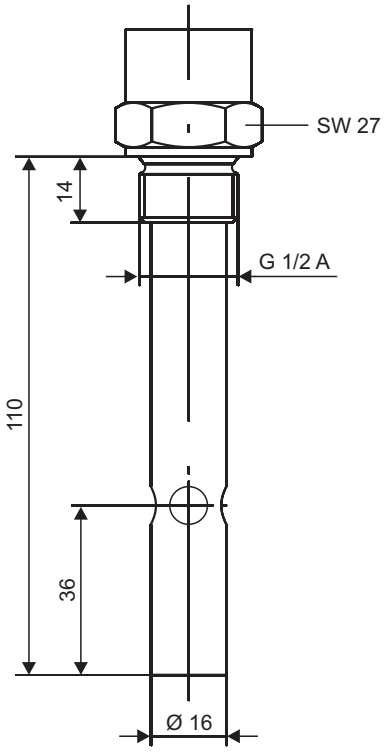

Thread G 1/2 A

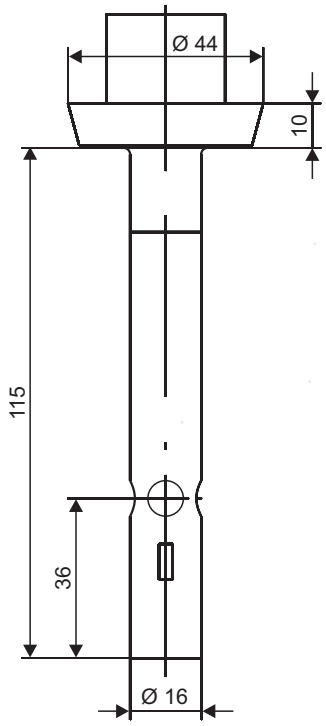

MK DN 25 (milk cone to DIN 11851)

JUMO GmbH & Co. KG
Delivery address: Mackenrodtstraße 14
36039 Fulda, Germany
Postal address: 36035 Fulda, Germany
Phone: +49 661 6003-0
Fax: +49 661 6003-607
E-mail: mail@jumo.net
Internet: www.jumo.net

JUMO Instrument Co. Ltd.
JUMO House
Temple Bank, Riverway
Harlow, Essex CM20 2DY, UK
Phone: +44 1279 635533
Fax: +44 1279 635262
E-mail: sales@jumo.co.uk
Internet: www.jumo.co.uk

JUMO Process Control, Inc.
8 Technology Boulevard
Canastota, NY 13032, USA
Phone: 315-697-5866
1-800-554-JUMO
Fax: 315-697-5867
E-mail: info@jumo.us
Internet: www.jumo.us

Type 202924/30... and Type 202924/31...

Choose the immersion length (EL) according to the installation situation

EL (fitting length)	Total length GL	Type
40	110	00562982
40	110	00562983
70	140	00562984
70	140	00562985

The customer must provide the tee shorts.

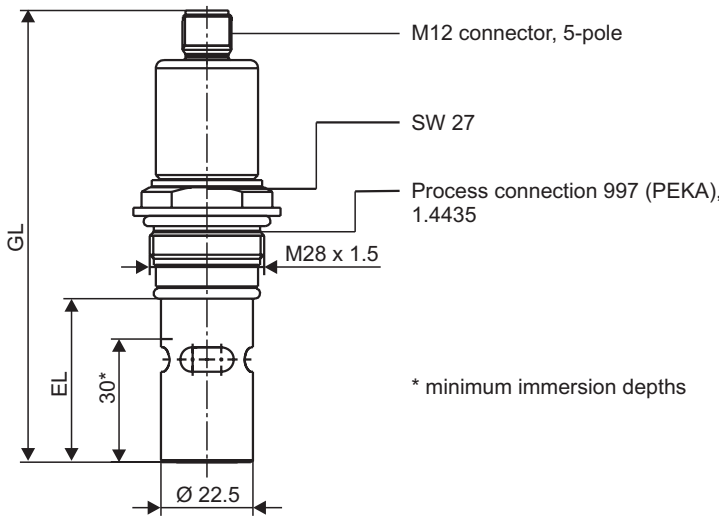

Varivent DN 50 - 150
TN 00577961

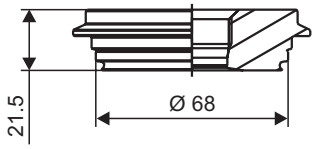

Clamp DN 25/32/40
TN 00577998

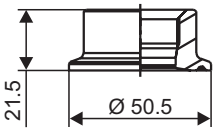

Clamp DN 50
TN 00577997

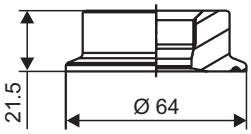

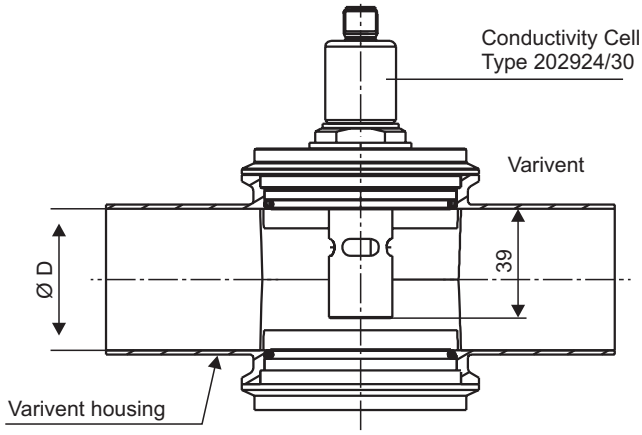

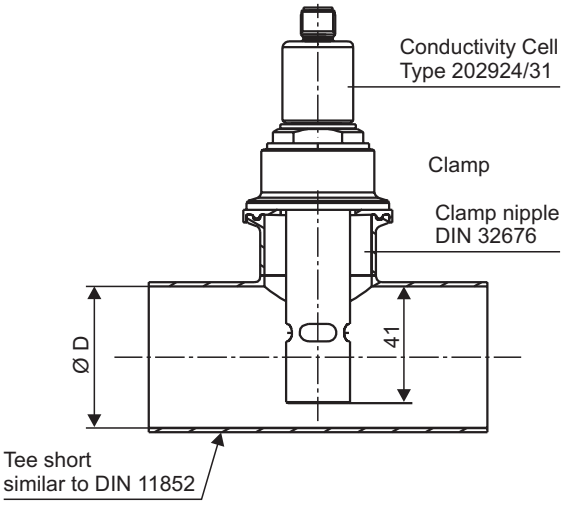

Case DN	ØD	Measuring cell type prefered	Measuring cell type alternatively
50	50	202924/30	nicht möglich
65	70		nicht möglich
80	81		202924/31
100	100		
125	125		
150	150		

Clamp nipple DN	Tee DN	ØD	Measuring cell type
25/32/40	50 - 25/32/40	50	202924/31
	65 - 25/32/40	70	
	80 - 25/32/40	81	
	100 - 25/32/40	100	
	125 - 25/32/40	125	
	150 - 25/32/40	150	
50	50 - 50	50	
	65 - 50	70	
	80 - 50	81	
	100 - 50	100	
	125 - 50	125	
	150 - 50	150	

JUMO GmbH & Co. KG
Delivery address: Mackenrodtstraße 14
36039 Fulda, Germany
Postal address: 36035 Fulda, Germany
Phone: +49 661 6003-0
Fax: +49 661 6003-607
E-mail: mail@jumo.net
Internet: www.jumo.net

JUMO Instrument Co. Ltd.
JUMO House
Temple Bank, Riverway
Harlow, Essex CM20 2DY, UK
Phone: +44 1279 635533
Fax: +44 1279 635262
E-mail: sales@jumo.co.uk
Internet: www.jumo.co.uk

JUMO Process Control, Inc.
8 Technology Boulevard
Canastota, NY 13032, USA
Phone: 315-697-5866
1-800-554-JUMO
Fax: 315-697-5867
E-mail: info@jumo.us
Internet: www.jumo.us

Type 202924/31...

Aseptic DN 40
TN 00577995

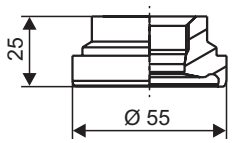

Aseptic DN 50
TN 00577979

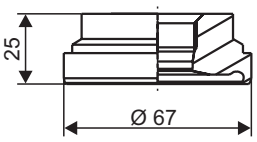

Aseptic DN 50
TN 00577979

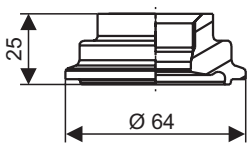

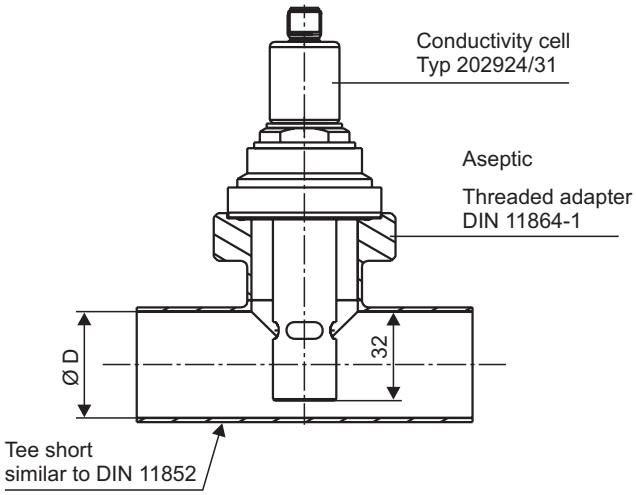

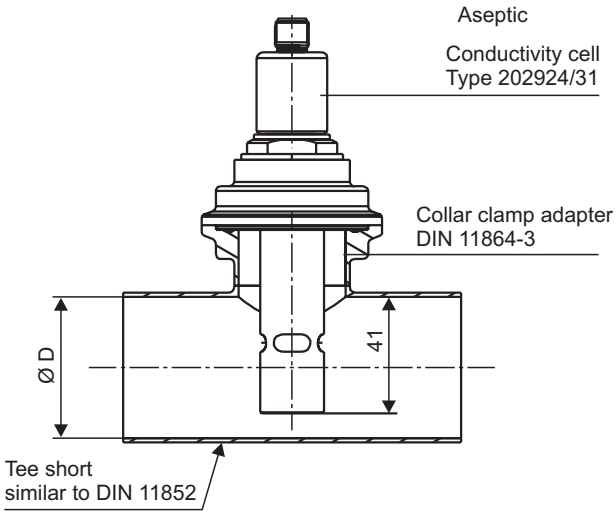

Threaded adapter DN	Tee DN	ØD	Measuring cell type
40	40 - 40	38	202924/31
	50 - 40	50	
	65 - 40	70	
	80 - 40	81	
	100 - 40	100	
	125 - 40	125	
	150 - 40	150	
50	50 - 50	50	
	65 - 50	70	
	80 - 50	81	
	100 - 50	100	
	125 - 50	125	
	150 - 50	150	

Collar clamp adapter	Tee DN	ØD	Measuring cell type
NKS DN 40 Form A	50 - 40	50	202924/31
	65 - 40	70	
	80 - 40	81	
	100 - 40	100	
	125 - 40	125	
	150 - 40	150	

JUMO GmbH & Co. KG
Delivery address: Mackenrodtstraße 14
36039 Fulda, Germany
Postal address: 36035 Fulda, Germany
Phone: +49 661 6003-0
Fax: +49 661 6003-607
E-mail: mail@jumo.net
Internet: www.jumo.net

JUMO Instrument Co. Ltd.
JUMO House
Temple Bank, Riverway
Harlow, Essex CM20 2DY, UK
Phone: +44 1279 635533
Fax: +44 1279 635262
E-mail: sales@jumo.co.uk
Internet: www.jumo.co.uk

JUMO Process Control, Inc.
8 Technology Boulevard
Canastota, NY 13032, USA
Phone: 315-697-5866
1-800-554-JUMO
Fax: 315-697-5867
E-mail: info@jumo.us
Internet: www.jumo.us

Extra code 765 (high-temperature version)

(only available for process connection 145 (3/4-14NPT))

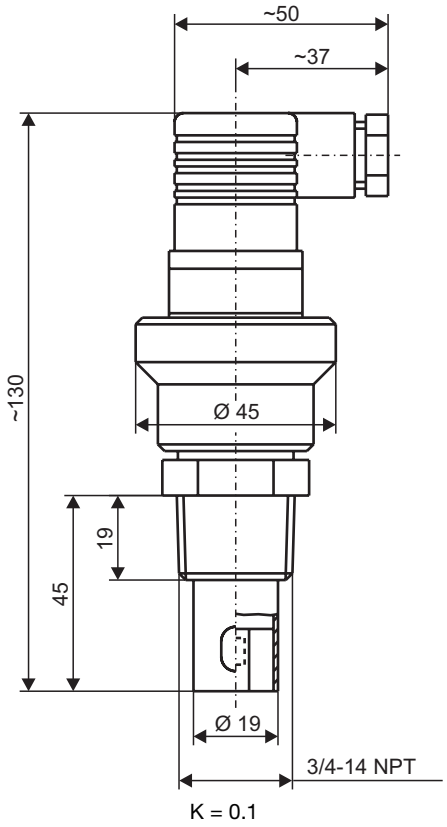

Installation example type 202924/20...

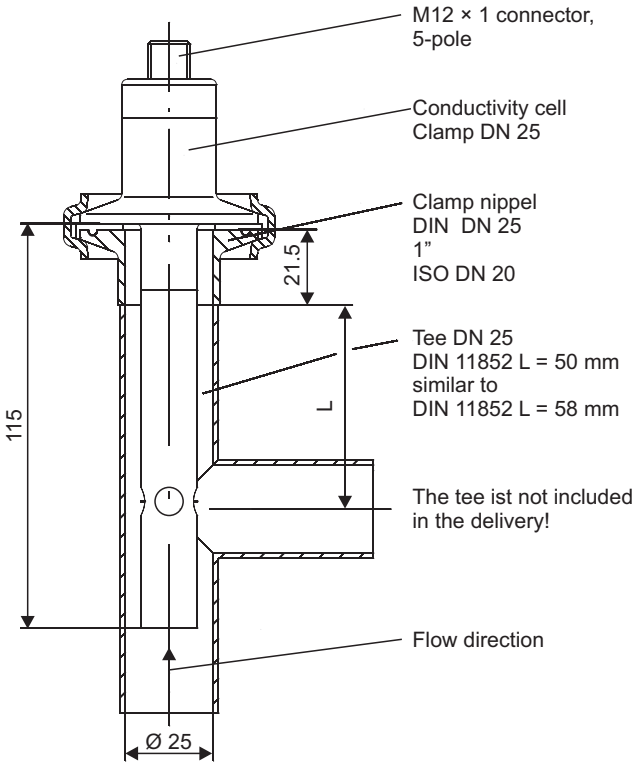

Elektrical connection

Connection for	Connector	M12 connector	Attached cable
Outer electrode	⏚	1	white
Inner electrode	2	2	brown
Temperature compensation (optional)	1 3	3 4	yellow green
3-wire circuit		5	

JUMO GmbH & Co. KG
Delivery address: Mackenrodtstraße 14
36039 Fulda, Germany
Postal address: 36035 Fulda, Germany
Phone: +49 661 6003-0
Fax: +49 661 6003-607
E-mail: mail@jumo.net
Internet: www.jumo.net

JUMO Instrument Co. Ltd.
JUMO House
Temple Bank, Riverway
Harlow, Essex CM20 2DY, UK
Phone: +44 1279 635533
Fax: +44 1279 635262
E-mail: sales@jumo.co.uk
Internet: www.jumo.co.uk

JUMO Process Control, Inc.
8 Technology Boulevard
Canastota, NY 13032, USA
Phone: 315-697-5866
1-800-554-JUMO
Fax: 315-697-5867
E-mail: info@jumo.us
Internet: www.jumo.us

Order details

				(1)	**Basic type**
				202924	Conductivity cells
				(2)	**Basic type extensions**
				10	JUMO tecLine CR-VA
				20	JUMO tecLine CR-VA SL (16 mm dia.)
				30	JUMO tecLine CR-PEKA S
				31	JUMO tecLine CR-PEKA L
				(3)	**Cell constant**
x	x	x	x	0001	K = 0.01 (Messbereich 0.1 to 20 MΩcm or 0.05 to 10 µS/cm)
x	x	x	x	0010	K = 0.1 (Messbereich 1 µS to 1 mS/cm)
				(4)	**Temperature sensor**
o	o			0000	none
o	o			1003	Pt100
o	o			1005	Pt1000
				(5)	**Process connection**
o	o			104	thread G 1/2 A
x				105	thread G 3/4 A
o				106	thread G 1 A
	o			144	1/2“-14 NPT
o				145	3/4“-14 NPT
o	o			604	taper connection DIN 11851-DN 25 (milk cone)
o	x			613	clamp DN 25
		x	x	997	JUMO-PEKA[1]
				(6)	**Elektrical connection**
o	o			17	attached cable connection, cable length 5 m
x				37	angled connector to DIN 43650
	x			83	M12 connector
				(7)	**Body material**
o				24	stainless steel 1.4404 only with extra code 765
o				26	stainless steel 1.4571
	x			31	stainless steel 1.4435 (similar to 316 L, pharmaceutical version)
x				88	PVDF (standard)
				(8)	**Cell material**
o				24	stainless steel 1.4404 only with extra code 765
x				26	stainless steel 1.4571 (standard)
	x			31	stainless steel 1.4435 (similar to 316 L, pharmaceuctical version)
o				60	titanium[2]
				(9)	**Extra codes**
x	x			000	non
o				765	high-temperature version[3]

x = standard
o = optional
- = not possible

	(1)		**(2)**		**(3)**		**(4)**		**(5)**		**(6)**		**(7)**		**(8)**		**(9)**
Order code		/		-		-		-		-		-		-		/	
Order example	202924	/	10	-	0010	-	1003	-	105	-	37	-	88	-	26	/	000

Note:
The type code is a type designation, not a modular system.
If at all possible, please choose the items listed under “Stock items” or “Production items”.
Any free combination of individual code features must be technically checked by us and released.
Please ask us in case of doubt.

[1] PEKA adapter must be ordered separately, see accessories
[2] only available with body material 88 (PVDF)
[3] only available with process connection 145 (3/4-14 NPT)

JUMO GmbH & Co. KG
Delivery address: Mackenrodtstraße 14
36039 Fulda, Germany
Postal address: 36035 Fulda, Germany
Phone: +49 661 6003-0
Fax: +49 661 6003-607
E-mail: mail@jumo.net
Internet: www.jumo.net

JUMO Instrument Co. Ltd.
JUMO House
Temple Bank, Riverway
Harlow, Essex CM20 2DY, UK
Phone: +44 1279 635533
Fax: +44 1279 635262
E-mail: sales@jumo.co.uk
Internet: www.jumo.co.uk

JUMO Process Control, Inc.
8 Technology Boulevard
Canastota, NY 13032, USA
Phone: 315-697-5866
1-800-554-JUMO
Fax: 315-697-5867
E-mail: info@jumo.us
Internet: www.jumo.us

Stock items

Delivery: 3 working days after receipt of order

Order code	Brief description	Sales No.
202924/10-0010-0000-105-37-88-26/000	K = 0.1/G 3/4A	00300203
202924/10-0010-1003-105-37-88-26/000	K = 0.1/Pt100/G 3/4A	00300202
202924/10-0010-1003-104-37-88-26/000	K = 0.1/Pt100/G 1/2A	00338487
202924/10-0001-0000-105-37-88-26/000	K = 0.01/G 3/4A	00300204
202924/10-0001-1003-105-37-88-26/000	K = 0.01/Pt100/G 3/4A	00300079
202924/10-0001-1003-106-37-88-26/000	K = 0.01/Pt100/G 1A	00089393
202924/20-0010-1003-104-83-31-31/000	K = 0.1/Pt100/G 1/2A/Ø 16 mm	00456809
202924/20-0001-1003-104-83-31-31/000	K = 0.01/Pt100/G 1/2A/Ø 16 mm	00452527

Stock items, pharmaceutical versions (incl. certificates)

Order code	Brief description	Sales No.
202924/10-0010-1003-613-37-31-31/000	K = 0.1/Pt100/class A/clamp DN 25 and body material 1.4435/airtight film packaging/including ASTM test certificate, FDA approval for insulator and O-rings, 3.1 certificate for material and roughness < 0,8 µ	00405886
202924/10-0001-1003-613-37-31-31/000	K = 0.01/Pt100/class A/clamp DN 25 and body material 1.4435/airtight film packaging/including ASTM test certificate, FDA approval for insulator and O-rings, 3.1 certificate for material and roughness < 0,8 µ	00420617
202924/20-0001-1003-613-83-31-31/000	K = 0.01/Pt100/class A/clamp DN 25 and body material 1.4435/airtight film packaging/including ASTM test certificate, FDA approval for insulator and O-rings, 3.1 certificate for material and roughness < 0,8 µ	00456810
202924/20-0010-1003-613-83-31-31/000	K = 0.1/Pt100/class A/clamp DN 25 and body material 1.4435/airtight film packaging/including ASTM test certificate, FDA approval for insulator and O-rings, 3.1 certificate for material and roughness < 0,8 µ	00456812
202924/30-0001-1005-997-83-31-31[a]	K = 0.01/Pt1000/class A/JUMO PEKA/process connection 1.4435/airtight film packaging/including ASTM test certificate, FDA approval for insulator and O-rings, 3.1 certificate for material and roughness < 0,8 µ	00562982
202924/30-0010-1005-997-83-31-31[a]	K = 0.1/Pt1000/class A/JUMO PEKA/process connection 1.4435/airtight film packaging/including ASTM test certificate, FDA approval for insulator and O-rings, 3.1 certificate for material and roughness < 0,8 µ	00562983
202924/31-0001-1005-997-83-31-31[a]	K = 0.01/Pt1000/class A/JUMO PEKA/process connection 1.4435/airtight film packaging/including ASTM test certificate, FDA approval for insulator and O-rings, 3.1 certificate for material and roughness < 0,8 µ	00562984
202924/31-0010-1005-997-83-31-31[a]	K = 0.1/Pt1000/class A/JUMO PEKA/process connection 1.4435/airtight film packaging/including ASTM test certificate, FDA approval for insulator and O-rings, 3.1 certificate for material and roughness < 0,8 µ	00562986

a. PEKA adapter must be ordered separately, see accessories

JUMO GmbH & Co. KG
Delivery address: Mackenrodtstraße 14
36039 Fulda, Germany
Postal address: 36035 Fulda, Germany
Phone: +49 661 6003-0
Fax: +49 661 6003-607
E-mail: mail@jumo.net
Internet: www.jumo.net

JUMO Instrument Co. Ltd.
JUMO House
Temple Bank, Riverway
Harlow, Essex CM20 2DY, UK
Phone: +44 1279 635533
Fax: +44 1279 635262
E-mail: sales@jumo.co.uk
Internet: www.jumo.co.uk

JUMO Process Control, Inc.
8 Technology Boulevard
Canastota, NY 13032, USA
Phone: 315-697-5866
1-800-554-JUMO
Fax: 315-697-5867
E-mail: info@jumo.us
Internet: www.jumo.us

Production items

Delivery: 10 working days after receipt of order

Order code	Brief description	Sales No.
202924/10-0001-0000-105-37-26-26/000	K = 0.01/G 3/4A/process connection 1.4571	00353041
202924/10-0001-1003-604-37-88-26/000	K = 0.01/Pt100/milk cone	00089395
202924/10-0010-1003-106-37-88-26/000	K = 0.1/Pt100/G 1A	00089389
202924/10-0010-0000-105-37-26-26/000	K = 0.1/G 3/4A/process connection 1.4571	00350627
202924/10-0010-1003-613-37-26-26/000	K = 0.1/Pt100/clamp DN 25/process connection 1.4571	00322533

Certifiable conductivity cells

Order code	Brief description	Sales No.
202924/10-0001-1003-105-37-88-26/000	certifiable version - certificates must be ordered separately	00392030
202924/10-0010-1003-105-37-88-26/000	certifiable version - certificates must be ordered separately	00392031

Certificates (optional)

Type	Sales No.
Materials test certificate to EN 10204 3.1 (when ordering, please specify in plain text: "material" and/or "roughness")	00365727
ASTM test certificate for precisely measured cell constant (1-point calibration)	00359893
FDA approval for insulator and O-rings	00423913

High-temperature version

Order code	Brief description	Sales No.
202924/10-0010-1003-145-37-24-24/765	K = 0.1/Pt100/NPT3/4-14	00397615

Accessories

Type	Sales No.
Connection cable, length 25 m, for self-assembly, 4-pole + screen	00303681
Connection cable, length 50 m, for self-assembly, 4-pole + screen	00304181
Connection cable including M12 cable socket (straight), cable length 10 m, 4-pole + screen	00458513
Connection cable including M12 cable socket (straight), cable length 25 m, 4-pole + screen	00458514
Cable box M12 × 1, 4-pole, 713 series, angled (supplied without cable), gold-plated contacts	00318906
Process connection JUMO PEKA for Varivent DN 40 - 125, stainless steel 1.4435/316 L with APZ 3.1, Ra < 0,8 µ	00577961
Process connection JUMO PEKA for clamp DN 25/32/40, stainless steel 1.4435/316 L with APZ 3.1, Ra < 0,8 µ	00577998
Process connection JUMO PEKA for clamp DN 50, stainless steel 1.4435/316 L with APZ 3.1, Ra < 0,8 µ	00577997
Process connection JUMO PEKA for Aseptic DN 40, stainless steel 1.4435/316 L with APZ 3.1, Ra < 0,8 µ	00577995
Process connection JUMO PEKA for Aseptic DN 50, stainless steel 1.4435/316 L with APZ 3.1, Ra < 0,8 µ	00577979
Process connection JUMO PEKA for Aseptic NKS DN 40, stainless steel 1.4435/316 L with APZ 3.1, Ra < 0,8 µ	00577999