

KS 90-1 / 92-1

Industrial and Process Controller

BluePort® Front interface and BlueControl software

Maintenance manager and error list

Two universal inputs

Day & Night display shows plain text and bargraphs

Manual gain scheduling

Self-Tuning to the setpoint without oscillation

Valve controller with position feedback and DAC© monitoring

3-point controller for water, fan and oil cooling

Type tested to EN 14597 (replaces DIN 3440) and cULus

High-impedance mV input for O_2 sensors

advanced line

- Universal continuous/switching version, i.e. reduced stocks
- 100 ms cycle time, i.e. also suitable for fast control loops
- 20 ms as shortest pulse-length
- Two freely configurable analog output, e.g. as process value output
- Customer-specific Linearization for all sensors
- Settings can be blocked via password and internal switch for high security
- Extended temperature range up to 60°C allows mounting close to the process
- Easy 2-point or offset measurement correction
- Monitoring of heating current and output circuit
- Emergency operation after sensor break by means of the „output hold“ function
- Logical combination of digital outputs, e.g. for general alarm
- Program controller version available KS 90-1 *programmer*
- RS 422/485 Modbus RTU interface
- Built-in transmitter power supply
- Splash-water proof front (IP 65)
- PROFIBUS-DP interface
- Customer specific data-set

APPLICATIONS

- Furnaces and ovens
- Burners and boilers
- Plastics processing
- Driers
- Heat treatment plants
- Thermal oil systems

DESCRIPTION

The industry and process controller KS 90-1 is intended for universal, precise, and cost-effective control tasks in all branches of industry. For this, the unit provides simple 2-point (on/off) control, continuous PID control, or 3-point stepping control. The process value signal is connected via a universal input. A supplementary analog input can be used for heating current measurement, as an external set-point inputor for position feedback mesaurement of motorized stepping controllers.

The optional 3rd input is an universal input that can be used for several functions, e.g. temperature dependend setpoint correction or differential control.

O_2 measurement and control

The standard KS 90-1 is suitable for oxygen control using heated and unheated O_2 sensors. The display range is 0,001 ppm...100% O_2, whereby the engineering unit (ppm / %) is shown automatically in the 4-digit display.

By means of the high-impedance (>200 MΩ) sensor voltage at input INP1, and the sensor temperature at input INP3, the O_2 concentration is determined using the Nernst Equation, and then displayed and controlled, if required. With a heated sensor, the reference temperature is entered as a constant.

To stabilize the O_2 display, a filter with a time constant <999,9s can be adjusted. The calibration supports the entry of correcting values (offset or two-point) in ppm or %O_2.

Outputs

Every KS 90-1 has four process outputs, either relays or up to 2 universal outputs that can be used for operating a solid-state relay, a continuous current/voltage output or to energize a two-wire transmitter. Optionally there are two additional opto coupler outputs.

Plug-in module

KS 90-1 controllers are built as plug-in modules. This enables them to be replaced very quickly without tools, and without disturbing the wiring.

Self-tuning during start-up and to the setpoint

This new function determines the optimum settings for fast line-out without overshoot. With three-point controller configuration, the „cooling“ parameters are determined separately, thus ensuring an optimum match to the process. By pushing a button the KS 90-1 determines the best control parameters at the actual setpoint. This function does not require oscillation, and performs a minimal deviation of the process value.

Customer specific data-set

A customer specific data-set can be generated and stored e.g. during commisioning.

Later the operator can overwrite settings by resetting to the customer specific data-set.

Display and operation

The „day & night" display of the KS 90-1 is charactrized by particularly high contrast in both dark and bright surroundings.
The status fields show operating conditions, control mode, and error messages reliably. The display is in plain text and can show various process values numerically or as a bargraph.

Front interface and Engineering Tools

Control parameter adjustment in seconds has now also been implemented in the KS 90 class of instruments. Via the BlueControl software incl. its simulation functions, and especially the convenient BluePort® front panel interface, the required set-up for a specific control task can be determined without a detailed study of the operating instructions.
Of course almost all adjustments can be done comfortably over the instrument front. (see page 7, BlueControl)

Password protection

If required, access to the various operating levels can be protected with a password. Similarly, access to a complete level can be blocked.

TECHNICAL DATA

INPUTS

SURVEY OF THE INPUTS

Input	Used for
INP1	As INP2 (x1default process value)
INP2	Heating current, ext. set-point or ext. correction, position feedback Yp, process value x1, 2nd process value x2, ext.correcting variable Y.E, input for additional limit signalling and indication
INP3 (option)	as for INP2 and additional sensor temperature with O_2 measurement
di1	Operation disabled, controller off, disabled auto/manual function, reset of stored alarms, switch-over to ... second set-point SP.2, external set-point SP.E, fixed correcting variable Y2, ext. correcting variable Y.E, manual operation, parameter set 1 ⇔ 2, process value INP1 ⇔ X2
di2	
di3 (option)	

PROCESS VALUE INPUT INP1

Resolution:	> 14 bit
Decimal point:	0 to 3 decimals
Digital input filter:	adjustable 0,0...100,0 s
Scanning cycle:	100 ms
Measured value correction:	2-point or offset correction

Table 1 Thermocouple ranges

Thermocouple		Range		Accuracy	Resolution (∅)
L	Fe-CuNi (DIN)	-100...900°C	-148...1652°F	≤ 2 K	0,1 K
J	Fe-CuNi	-100...1200°C	-148...2192°F	≤ 2 K	0,1 K
K	NiCr-Ni	-100...1350°C	-148...2462°F	≤ 2 K	0,2 K
N	Nicrosil/Nisil	-100...1300°C	-148...2372°F	≤ 2 K	0,2 K
S	PtRh-Pt 10%	0...1760°C	32...3200°F	≤ 2 K	0,2 K
R	PtRh-Pt 13%	0...1760°C	32...3200°F	≤ 2 K	0,2 K
T	Cu-CuNi	-200...400°C	-328...752°F	≤ 2 K	0,05 K
C	W5%Re-W26%Re	0...2315°C	32...4199°F	≤ 2 K	0,4 K
D	W3%Re-W25%Re	0...2315°C	32...4199°F	≤ 2 K	0,4 K
E	NiCr-CuNi	-100...1000°C	-148...1832°F	≤ 2 K	0,1 K
B[(1)]	PtRh-Pt6%	0(400)...1820°C	32(752)...3308°F	≤ 3 K	0,3 K
special		-25....75 mV		≤ 0,1 %	0,01 %

(1) values applied above100°C

Table 2 Resistance transducers

Type	Sensor current	Range		Accuracy	Resolution (∅)
Pt100		-200...850°C	-328...1562°F	≤ 1 K	0,1 K
Pt1000		-200...200°C	-328...392°F	≤ 2 K	0,1 K
KTY 11-6*		-50...150 °C	-58...302 °F	≤ 2 K	0,05 K
special		0...4500 Ω		≤ 0,2 %	0,01 %
special	0,2 mA	0...450 Ω **			
Poti		0...160 Ω **			
Poti		0...450 Ω **		≤ 0,1 %	0,01 %
Poti		0...1600 Ω**			
Poti		0...4500 Ω**			

** corresponds to spezial 0...4500 Ω*
*** lead resistance included*

Table 3 Current and voltage

Range	Input resistance	Accuracy	Resolution (∅)
0-10 Volt	≈ 110 kΩ	≤ 0,1 %	0,6 mV
2,5...115 mV	≥ 200MΩ	≤ 0,1 %	6 µV
25...1150 mV	≥ 200MΩ	≤ 0,1 %	60 µV
0-20 mA	20 Ω	≤ 0,1 %	1,5 µA

Special
(-linearization): 15 segments
Standard table: temperature sensor KTY 11-6

Thermocouples (Table 1)

Internal and external temperature compensation

Input impedance: ≥ 1 MΩ
Effect of source resistance: 1 µV/Ω

Cold junction compensation

Max. additional error ± 0,5 K

Sensor break monitoring

Sensor current: ≤ 1 µA
Operating sense configurable (see page 4)

Special thermocouple

Together with the linearization, the measuring range -25...75mV can be used for connecting thermocouples that are not included in table 1.

Resistance thermometer

Connection: 3-wire
Lead resistance: max. 30 Ω
Input circuit monitor: Break and short circuit

Current and voltage signals

Span start, end of span:	anywhere within measuring range
Scaling:	selectable -1999...9999
Linearization:	15 segments, adaptable with BlueControl
Decimal point:	adjustable
Input circuit monitor:	12,5% below span start (2mA, 1V)

SUPPLEMENTARY INPUT INP2

Resolution:	> 14 bit
Scanning cycle:	100 ms

Heating current measurement

via current transformer

Measuring range:	0...50 mA AC
Scaling:	adjustable -1999..0,000..9999 A

Current measurement range

Input resistance	approx. 120 Ω
Span:	configurable within 0 to 20mA
Scaling:	adjustable -1999...9999
Input circuit monitor:	12,5% below span start (4..20mA → 2mA)

Potentiometer

Ranges see Table 2

Connection:	2-wire
Lead resistance:	max. 30 Ohm
Input circuit monitor:	Break

SUPPLEMENTARY INPUT INP3 (OPTION)

Resolution:	> 14 bit
Scanning cycle:	100 ms

Technical data as for INP1 except the 10V range.

CONTROL INPUTS DI1, DI2

Configurable as direct or inverse switch or push-button!
Connection of a potential-free contact suitable for switching „dry" circuits.

Switched voltage:	5 V
Switched current:	100 µA

CONTROL INPUTS DI2, DI3 (OPTION)

The digital input di2 located on the A-card and di2 located on the option card are or-linked.
Configurable as switch or push-button!
Optocoupler input for active triggering

Nominal voltage:	24 V DC, external
Current sink (IEC 1131 Type 1)	
Logic „0":	-3...5 V
Logic „1":	15...30 V
Current requirement:	approx. 5 mA

TRANSMITTER SUPPLY U_T (OPTION)

Output:	22 mA / ≥ 18 V

The analog outputs OUT3/OUT4 and the transmitter supply U have different voltage potentials. Therefore, with analog outputs, you must not set up an external galvanic connection between OUT3/4 and U.

Electrical connections:

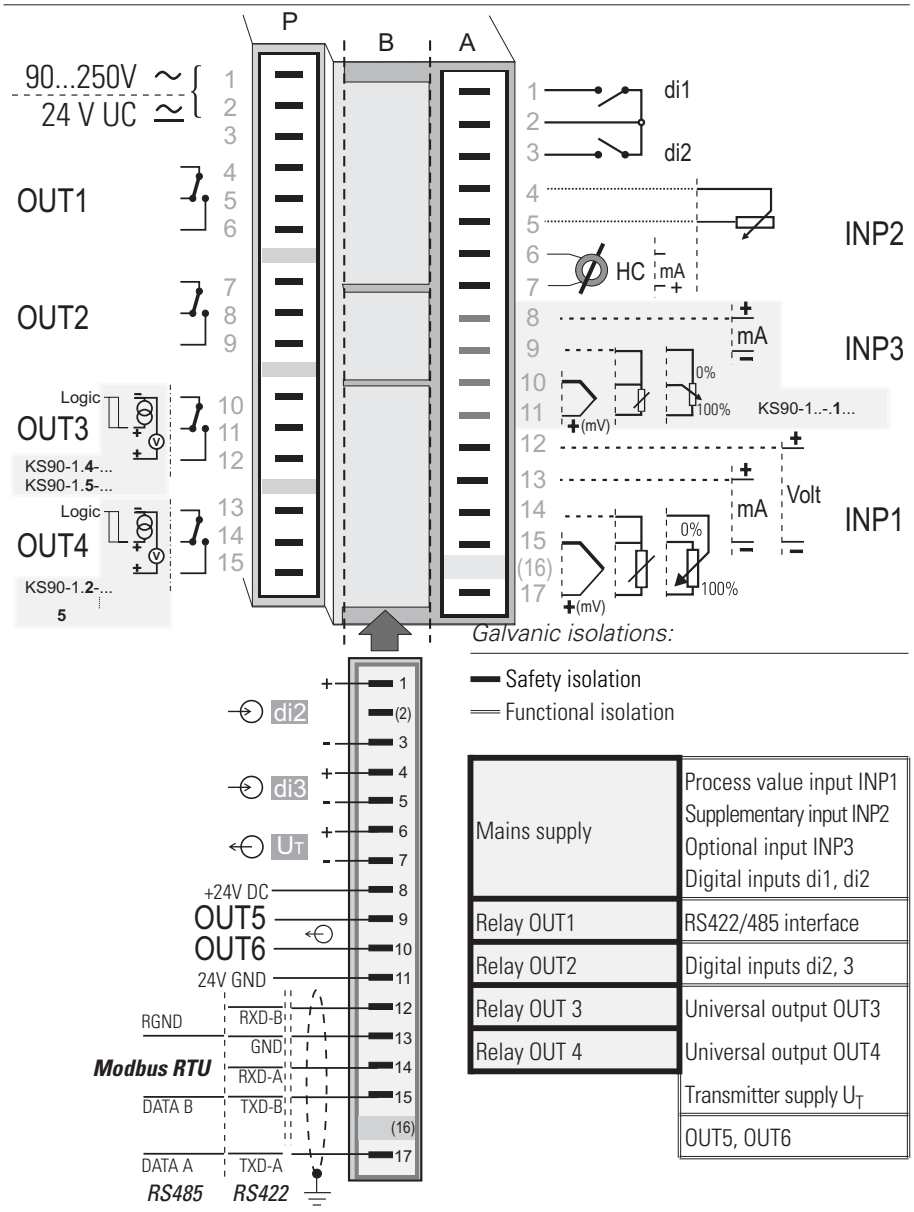

Galvanic isolations:

Safety isolation
Functional isolation

Mains supply	Process value input INP1 Supplementary input INP2 Optional input INP3 Digital inputs di1, di2
Relay OUT1	RS422/485 interface
Relay OUT2	Digital inputs di2, 3
Relay OUT 3	Universal output OUT3
Relay OUT 4	Universal output OUT4
	Transmitter supply U_T
	OUT5, OUT6

Dimensions:

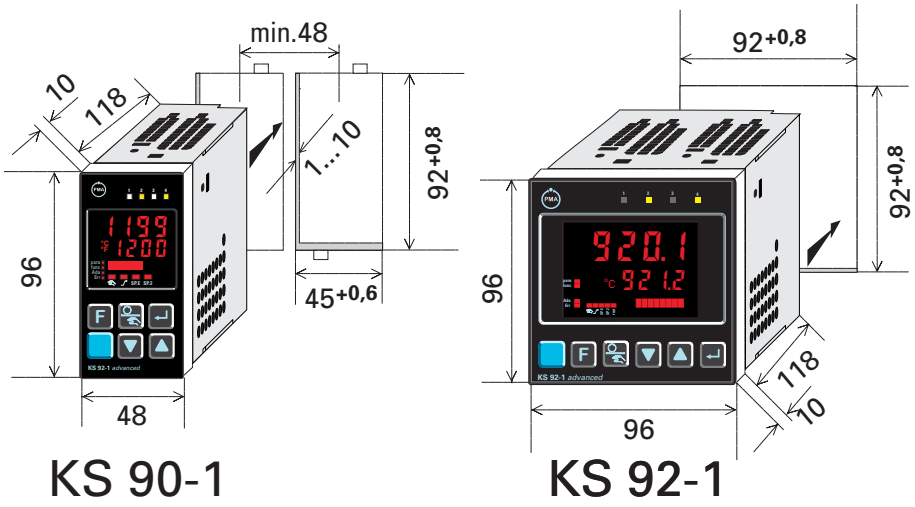

KS 90-1 KS 92-1

OUTPUTS

SURVEY OF THE OUTPUTS

Output	Used for
OUT1, and OUT2 (relay)	Control output heating/cooling or Open/Close, limit contacts, alarms *
OUT3, 4 (relays or logic)	as OUT1 and OUT2
OUT3, 4 (continuous)	Control output, process value, meassured values INP1/2/3, set-point, control deviation, position feedback Yp, transmitter supply 13 V / 22 mA
OUT5, OUT6 (Optocoupler)	as OUT1 and OUT2 **OPTION**

** All logic signals can be OR-linked !*

RELAY OUTPUTS OUT1..OUT4

Contacts:	Potential-free changeover contact
Max. contact rating:	500 VA, 250 VAC, 2A at 48...62 Hz, resistive load
Min. contact rating:	6 V, 1 mA AC/DC
Duty cycle electric:	for I = 1A/2A: ≥ 800,000 / 500,000 (at ~ 250V / (resistive load))

Note:
If the relays operate external contactors, these must be fitted with RC snubber circuits to manufacturer specifications to prevent excessive switch-off voltage peaks.

OUT3 , OUT4 AS UNIVERSAL OUTPUT

Galvanically isolated from the inputs.

Freely scalable

DA-converter limiting frequency T_{90}:	50 ms
Limiting frequency of the complete continuous controller:	> 2 Hz
Resolution:	11 bit

Current output

0/4...20 mA, configurable.

Signal range:	0...approx. 22 mA
Load:	≤ 500 Ω
Load effect:	none
Resolution:	≤ 22 µA (0,1%)
Error:	≤ 40 µA (0,2%)

Voltage output

0/2...10V, configurable

Signal range:	0...11 V
Load:	≥ 2 kΩ
Load effect:	none
Resolution:	≤ 11 mV (0,1%)
Error:	≤ 20 mV (0,2%)

OUT3, OUT4 used as transmitter supply

Output:	22 mA / ≥ 13 V

OUT3 used as logic output

Load≤ 500 Ω	0/≤ 20 mA
Load > 500 Ω	0/> 13 V

OUTPUTS OUT5, OUT6 (OPTIONAL)

Galvanically isolated opto-coupler outputs.

Grounded load:
common positive control voltage.
Output rating: 18...32 VDC; =70 mA
Internal voltage drop: =1 V with I_{max}
Protective circuit: built-in against short circuit, reversed polarity.
Node: For inductive load a free-wheel diode has to be connected externally.

FUNCTIONS

Control behaviour

- Signaler with asymmetric adjustable switching differential (ON/OFF controller)
- PID controller (2-point and continuous)
- Delta / Star / Off or 2-point controller with switch over from partial to full load
- 2 x PID (heating/cooling)
- 3-point stepping controller with or without position feedback
- Continuous controller with internal positioner (stepping controller)

Two parameter sets for manual gain scheduling
Self-tuning control parameters or adjustable manually via front keys or BlueControl software.

Behaviour with 2- and 3-point controllers

- *Standard behaviour:*
  For precise matching of the required output value at the output signal limits, the controller changes the cycle times for heating and cooling automatically and continuously.
- *With constant cycle times:*
  The length of the shortest heating and cooling pulse is adjustable >20ms.
- *Water cooling linear (heating=standard):*
  To ensure a sufficient cooling effect, the cooling function starts only after reaching an adjustable temperature value. The pulse length is adjustable, >20ms too and remains constant for all output values.
- *Water cooling nonlinear (heating=standard):*
  The general function is described above but the controller additionally takes in consideration that the water cooling is usually much stronger than the heating (thus preventing unfavorable behavior when changing from heating to cooling).

Set-point functions

- Adjustable set-point gradient (rate) 0,01...9999 °C/min
- Set-point control
- Set-point/cascade control
- Set-point/cascade control with external correction

Process value calculation

- Standart (xeff = INP1)
- Ratio (INP1/X2)
- Difference (INP1-X2)
- Max (INP1, X2)*
- Min (INP1, X2)*
- Mean value (INP1, X2)*
- Switch-over between INP1 and X2
- O_2 functions with constant sensor temperature
- O_2 functions with measured sensor temperature

*applicable, if redundant sensors are necessary. If one sensor fails the rest can go on.

Behaviour with sensor break or short circuit:

- Control outputs switched off
- Switch-over to a safe output value
- Switch-over to a mean output value
- With process value functions min, max and mean value, control ist continued with the remaining process value.

SPECIAL FUNCTIONS

DAC® ensures operational safety

Digital Actuator Control monitors the most important functions of the actuator and is able to detect problems long before they cause large control deviations. Typical disturbances are a blocked actuator, a defective motor or capacitor and all related problems with an actuator.
The DAC® function is available for three-point stepping controllers with potentiometer position feedback measured via INP3.

Modbus Master

The KS 9x-1 can be configured as Modbus Master. This enables it to transmit user-specified signals or parameters cyclically to all connected Slave controllers. For example, the following applications are possible:

- Set-point shifting relative to the set-point adjusted in the Slave (see picture)
- matching of control parameters, limit contacts, etc.
- Limiting the output value (override control OVC)
- …

LIMIT SIGNALLING FUNCTIONS

Max., Min. or Max./Min. monitoring with adjustable hysteresis.

Signals which can be monitored:

- Process value
- Control deviation
- Control deviation with suppression during start-up or set-point changes
- Effective set-point
- Output signal Y
- Input values of INP1, INP2, INP3
- Difference INP1 - X2. This function allows to detect aged thermocouples.

Functions

- Input signal monitoring
- Input signal monitoring with latch (reset via front key or digital input)
- Rate of change monitoring (/min)
- Adjustable discriminator time of 0...9999 seconds

Several limit signals or alarms can be OR-linked before being output. Applications: Release of a brake with motor actuators, general alarms, etc.

ALARMS

Heating current alarm

- Overload and short circuit
- Open circuit and short circuit

Limit value adjustable 0...9999 A

Control loop alarm

Automatic detection if there is no response of the process to a change of output value.

Sensor break or short circuit

Depending on selected input type, the input signal is monitored for break and short circuit.

MAINTENANCE MANAGER

Display of error signals, warnings, and latched limit messages in the error list. Signals are latched, and can be reset manually.

Possible signals in the error list:

Modbus Master function supports setpoint changes e.g. in extruder applications

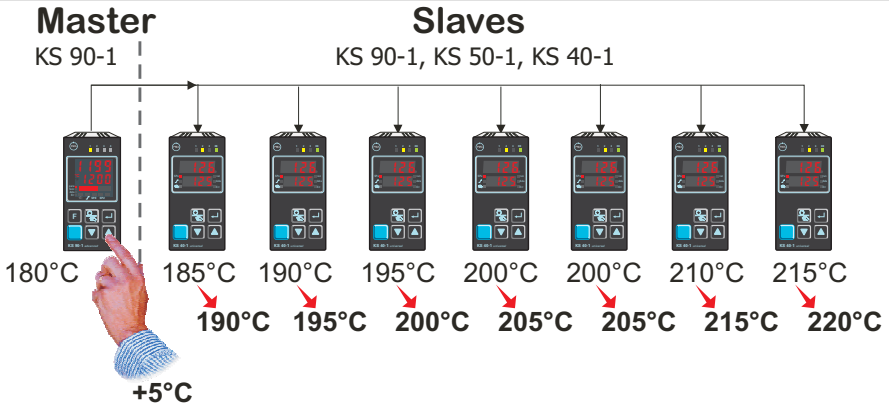

Display and operation:

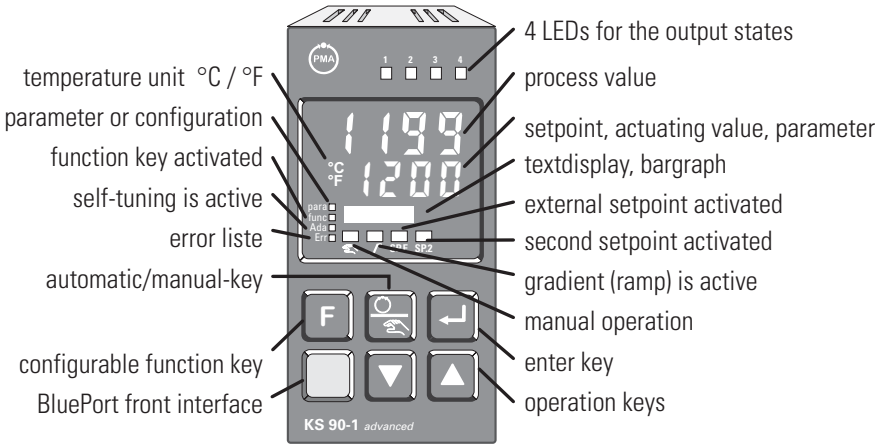

Example of the linkage of the internal functions:

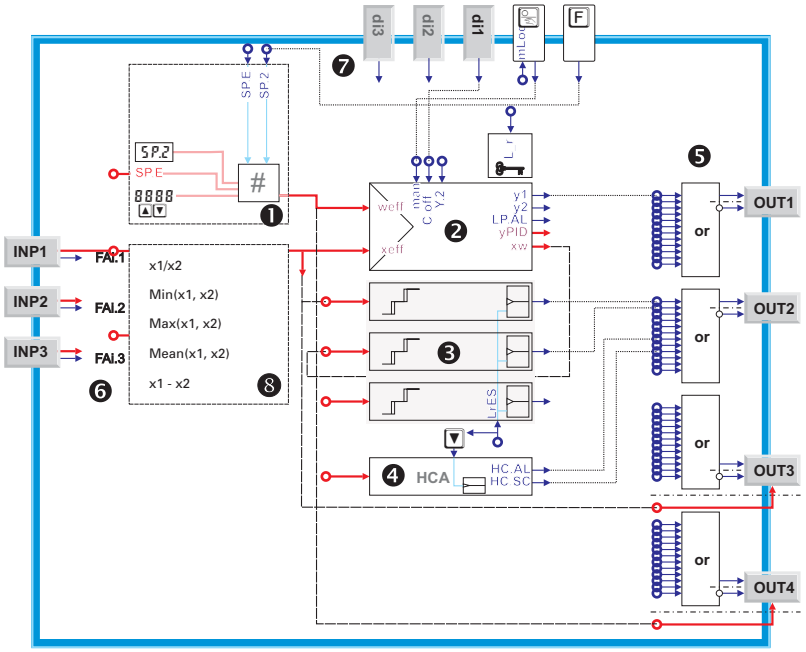

❶ setpoint processing
❷ controller function with loop monitoring
❸ limit monitoring, configurable with latch and suppression
❹ heating current monitoring
❺ output processing with logic or-combination and inverting
❻ analog inputs with logical sensor fail signal
❼ digital inputs, function key and -key with lock function
❽ process value processing

Blinking errror symbol shows active alarm in the errorlist



- Sensor break, short circuit, reversed polarity
- Heating current alarm
- Control loop alarm
- Fault during self-tuning
- latched limit messages
- Re-calibration warning
- Maintenance interval of actuator
- Internal fault (RAM, EEPROM, ...)

OPERATION AND DISPLAY

Display

Multi-function Day&Night display with red backlighting (adjustable)

process value:	4 x 7 segment 10,5 mm
lower display:	4 x 7 segment 7,8 mm
text display:	8-character dot matrix used as numeric or bargraph display

Operating functions

The functions of the -key and the F-key are configurable:

Function		F
Remote (no front operation)		X
SP.2 (2nd setpoint)		X
SP.E (external setpoint)		X
Y.2 (2nd output value)	X	X
Y.E (ext. output value)	X	X
Manual operation	X	X
C.OFF (controller function off)	X	X
Lock of manual key		X
Reset of latched limits and error list	X	X
Parameter set 1 ⇔ 2		X
Process value X1 ⇔ X2		X

Several functions can be combined e.g. SP.2 and parameter set switch-over (gain scheduling) with only one key.

POWER SUPPLY

Depending on version:

AC SUPPLY

Voltage:	90...260 VAC
Frequency:	48...62 Hz
Power consumption	approx. 10VA

UNIVERSAL SUPPLY 24 V UC

AC voltage:	20,4...26,4 VAC
Frequency:	48...62 Hz
DC voltage:	18...31 V DC class 2
Power consumption:	approx: 10 VA (W)

BEHAVIOUR WITH POWER FAILURE

Configuration, parameters, and adjusted set-points, control mode:
Non-volatile storage in EEPROM

BluePort® FRONT INTERFACE

Connection of PC via PC adapter (see „Accessories"). The BlueControl software is used to configure, set parameters, and operate the KS 90-1.

BUS INTERFACE (OPTION)

RS 422/485 INTERFACE

Galvanically isolated

Physical:	RS 422/485
Protocol:	Modbus RTU
Transmission speed: 2400, 4800, 9600, 19.200 bits/s	
Address range:	00...99
Number of controllers per bus:	32

Repeaters must be used to connect more controllers.

PROFIBUS DP

➢ see data sheet 9499-737-44813

ENVIRONMENTAL CONDITIONS

Protection modes

Front panel:	IP 65
Housing:	IP 20
Terminals:	IP 00

Permissible temperatures

For specified accuracy:	0...60°C
Warm-up time:	< 15 minutes
Temperature effect:	< 100ppm/K
For operation:	-20...65°C
For storage:	-40...70°C

Humidity

75% yearly average, no condensation

Shock and vibration

DIN EN 60068-2-6

Frequency:	10...150 Hz
Unit in operation:	1g or 0,075 mm
Unit not in operation:	2g or 0,15 mm

DIN EN 60068-2-27

Shock:	15g
Duration:	11ms

Electromagnetic compatibility

Complies with EN 61 326-1

- Complies with the immunity requirements for continuous, unattended operation
- Complies with the emmission requirements class B for rural areas
- Surge disturbances may increase the measurement error and lead to error messages

GENERAL

Housing

Material:	Makrolon 9415, flame-retardant
Flammability class:	UL 94 V0, self-extinguishing

Plug-in module, inserted from the front

Safety tests

Complies with EN 61010-1 (VDE 0411-1):
Over voltage category II
Contamination class 2
Working voltage range 300 VAC
Protection class II

Certifications

Type tested to EN 14597 (replaces DIN 3440)

With certified sensors applicable for:

- Heat generating plants with outflow temperatures up to 120°C to DIN 4751
- Hot-water plants with outflow temperatures above 110°C to DIN 4752
- Thermal transfer plants with organic transfer media to DIN 4754
- Oil-heated plants to DIN 4755

cULus-certification

(Type 1, indoor use)
File: E 208286

Electrical connections

Depending on version:

- Flat-pin connectors 1 x 6,3 mm or 2 x 2,8 mm to DIN 46 244
- Screw terminals for conductor cross-section from 0,5 to 2,5 mm²

Mounting

Panel mounting with two fixing clamps at top/bottom or left/right
Close mounting possible

Mounting position:	not critical
Weight:	0,27 kg (9.52 oz)

Accessories supplied with unit

Operating instructions
2 fixing clamps

ACCESSORY EQUIPMENT

BlueControl (Engineering Tool)

PC-based program for configuring, setting parameters, and operating (commissioning) the KS 90-1 controller. Moreover, all settings can be saved, and printed on demand.
Depending on version, a powerful data acquisition module is available, complete with trend graphics.

Visibility mask

The BlueControl software can be used to blind out parameters in the instrument. Thus, only alowed parameters can be changed on side. Safety relevant parameters are invisible!

Two parameters are blinded out:

Name	Description	Visible
Setp	**Setpoint**	☑
SP.LO	lower sepoint range	☐
SP.Hi	upper sepoint range	☐
SP.2	2nd setpoint	☑
r.SP	setpoint ramp [/min]	☑
t.SP	timer dwell time [min]	☑

Simulation

The built-in simulation serves to test the controller settings, but can also be used for general training and observing the interaction between controller and control loop.

Software requirements

Windows 95/98/NT/2000.

Configurations that can only be implemented via the BlueControl software (not via the front-panel keys):

- Customer-specific linearizations
- Enable „forcing“ for inputs/outputs
- Adjustment of limits for operating hours and switching cycles

BlueControl, versions and functionality:

Functionality	Mini	Basic	Expert
parameter and configuration setting	yes	yes	yes
controller and loop simulation	yes	yes	yes
download: transfer of an engineering to the controller	yes	yes	yes
online mode / visualization	SIM only	yes	yes
defining an application specific linearization	yes	yes	yes
configuration in the extended operating level	yes	yes	yes
upload: reading an engineering from the controller	SIM only	yes	yes
basic diagnostic functions	no	no	yes
saving data file and engineering	no	yes	yes
printer function	no	yes	yes
online documentation, help	yes	yes	yes
implementation of measurement value correction	yes	yes	yes
data acquisition and trend display	SIM only	yes	yes
wizard function	yes	yes	yes
extended simulation	no	no	yes
customer-specific default data-set	no	no	yes
programeditor (KS 90-1programmer only)	no	no	yes

- Switch-over to 60 Hz mains frequency
- Master/slave configuration
- Disable operator actions and operating levels, plus password definition
- Prevent automatic optimization of cycle times T1, T2
- Activating customer specific data-set

Hardware requirements:

A PC adapter (see „Accessories“) is required for connecting the controller.

Updates and demo software can be downloaded from:
www.pma-online.de

ORDERING INFORMATION

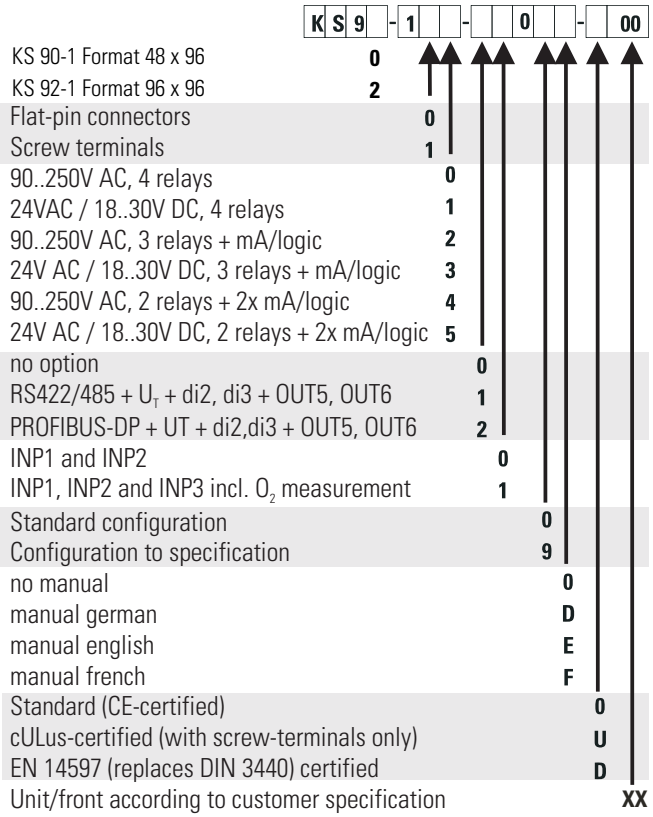

ACCESSORIES

Description		Order no.
Current converter 50A AC		9404-407-50001
PC adapter, for connecting the BlueControl software to the BluePort®		9407-998-00001
USB-Connector for PC-Adapter		9407-998-00081
Standard rail adapter		9407-998-00061
Operating manual KS 90-1	English	9499-040-62911
	German	9499-040-62918
	French	9499-040-62932
Operating manual KS 90-1dp	English	9499-040-66111
	German	9499-040-66118
BlueControl Mini	English/ German/ French	www.pma-online.de
BlueControl Basic	English/ German/ French	9407-999-11001
BlueControl Expert	English/ German/ French	9407-999-11011
Datasheet KS 90-1	English	9498-737-40613
	German	9498-737-40633
Datasheet KS 90-1dp	English	9498-737-44813
	German	9498-737-44833
Engineering set KS 90-1 PROFIBUS	English	9407-999-10501
	German	9407-999-10511
Sub-D connector for flat-pin connectors		9407-998-07001
Sub-D connector for screw terminals		9407-998-07011

PMA
Prozeß- und Maschinen- Automation GmbH
P.O. Box 31 02 29
D-34058 Kassel
Tel.: +49 - 561- 505 1307
Fax: +49 - 561- 505 1710
E-mail: mailbox@pma-online.de
Internet: http://www.pma-online.de

Your local representative:

Printed in Germany - Edition 07/2011 - Subject to change without notice - 9498 737 40613