Product data sheet
Characteristics

XMLP150PD130
pressure transmitter - XMLP - 150psi - 1/4"18NPT - 0,5..4,5V - M12 - set 1



Main

Range of product	OsiSense XM
Product or component type	Electronic pressure sensors
Pressure sensor type	Pressure transmitter
Pressure sensor name	XMLP
Electrical circuit type	Control circuit
Pressure sensor size	150 psi
Local display	Without
Controlled fluid	Fresh water 0...135 °C Air -40...135 °C Hydraulic oil -40...135 °C Gas -40...135 °C Refrigeration fluid -40...135 °C
Fluid connection type	1/4" - 18 NPT (male)
Electrical connection	1 male connector M12 4 pins
[Us] rated supply voltage	5 V DC SELV, voltage limits: 4.5...5.5 V
Current consumption	< 7 mA
Type of output signal	Analogue
Analogue output function	0.5...4.5 V, 3-wire
Quantity per set	Set of 1
Type of packing	Individual

Complementary

Pressure setting range	0...150 psi
Maximum permissible accidental pressure	450 psi
Destruction pressure	900 psi
Materials in contact with fluid	Stainless steel AISI 316L
Operating position	Any position
Protection type	Load short-circuit

Disclaimer: This documentation is not intended as a substitute for and is not to be used for determining suitability or reliability of these products for specific user applications

	Reverse polarity
Electromagnetic compatibility	1.2/50 µs shock waves immunity test conforming to EN/IEC 61000-4-5 - test level 1 kV (f = 42 Ohm) Immunity to magnetic fields conforming to EN/IEC 61000-4-8 - test level 100 A/m (f = 50 Hz) Susceptibility to electromagnetic fields conforming to EN/IEC 61000-4-3 - test level 10 V/m (f = 80...3000 MHz) Radiated RF fields conforming to EN/IEC 61000-4-6 - test level 10 V (f = 0.01...80 MHz) Electrical fast transient/burst immunity test conforming to EN/IEC 61000-4-4 - test level 2 kV Electrostatic discharge immunity test conforming to EN/IEC 61000-4-2 - test level 8 kV air, 4 kV contact
[Uimp] rated impulse withstand voltage	0.5 kV
Response time on output	<= 2 ms for 10...90 % of full scale
Measurement accuracy	+/- 0.5 % of the measuring range
Accuracy	0.1 % of the measuring range
Drift of the sensitivity	+/- 0.02 % of measuring range/°K
Drift of the zero point	+/- 0.02 % of measuring range/°K
Mechanical durability	>= 10000000 cycles
Product weight	0.088 kg
Diameter	26 mm
Length	36 mm

Environment

Standards	EN/IEC 61326-2-3 NSF ANSI 61
Product certifications	EAC RCM CE cULus
Protective treatment	TC
Ambient air temperature for operation	-30...85 °C
Ambient air temperature for storage	-50...100 °C
Vibration resistance	20 gn (f = 15...2000 Hz) conforming to EN/IEC 60068-2-6
Shock resistance	100 gn for 11 ms conforming to EN/IEC 60068-2-27
IP degree of protection	IP69K conforming to EN/IEC 60529 IP65 conforming to EN/IEC 60529 IP67 conforming to EN/IEC 60529

Offer Sustainability

Sustainable offer status	Green Premium product
RoHS (date code: YYWW)	Compliant - since 1723 - Schneider Electric declaration of conformity Schneider Electric declaration of conformity
REACh	Reference not containing SVHC above the threshold Reference not containing SVHC above the threshold
Product environmental profile	Available
Product end of life instructions	Need no specific recycling operations

XMLP150PD130

Dimensions

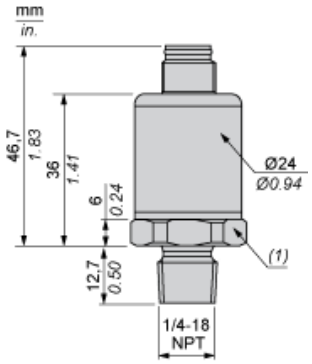

(1) SW24 tightening torque ≤ 25 N.m / 221 lb-in

Wiring Diagram

3-Wire Technique (0.5 – 4.5 V)

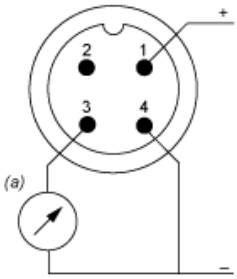

(a) V out

Curves

