

Image may differ from product. See technical specification for details.

81216 TN

Single row cylindrical roller thrust bearing, single direction

Single row cylindrical roller thrust bearings are designed to accommodate heavy axial loads and peak loads in one direction, but not radial loads. They provide a high degree of stiffness and require little axial space. They are mainly used in applications where thrust ball bearings do not have sufficient load carrying capacity. An important feature is the

separable design, which facilitates mounting and enables the bearing components to be interchanged.

- High axial load carrying capacity
- High stiffness
- Long service life
- Require little axial space
- Separable design

Overview

Dimensions

Bore diameter	80 mm
Outside diameter	115 mm
Height	28 mm

Performance

Basic dynamic load rating	160 kN
Basic static load rating	610 kN
Reference speed	1 200 r/min
Limiting speed	2 400 r/min

Properties

Bearing part	Complete bearing
Axial load capability	Single-direction
Number of rows	1
Cage	Non-metallic
Tolerance class	Normal
Material, bearing	Bearing steel
Coating	Without

Logistics

Product net weight	0.9 kg
UNSPSC code	31171505

Technical specification

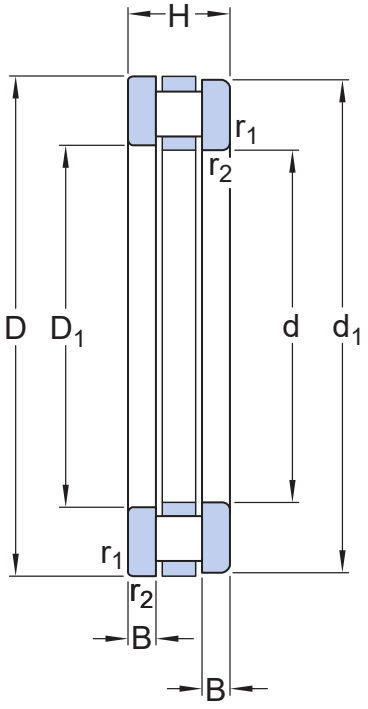

Dimensions

d	80 mm	Bore diameter
D	115 mm	Outside diameter
H	28 mm	Height
d_1	115 mm	Outside diameter shaft washer
D_1	82 mm	Bore diameter housing washer
B	8.5 mm	Height shaft washer
$r_{1,2}$	min. 1 mm	Chamfer dimension housing washer

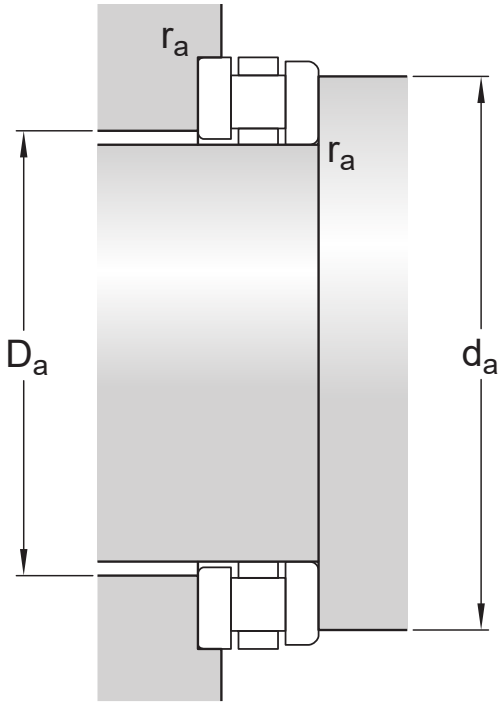

Abutment dimensions

d_a	min. 112 mm	Abutment diameter shaft
D_a	max. 84 mm	Abutment diameter housing
r_a	max. 1 mm	Fillet radius

Calculation data

Basic dynamic load rating	C	160 kN
Basic static load rating	C_0	610 kN
Fatigue load limit	P_u	63 kN
Reference speed		1 200 r/min
Limiting speed		2 400 r/min
Minimum axial load factor	A	0.0298

Included products

Roller and cage thrust assembly	K 81216 TN
Shaft washer	WS 81216
Housing washer	GS 81216

Tolerances and clearances

GENERAL BEARING SPECIFICATIONS

- Tolerances: table, table, values

DESIGN CONSIDERATIONS

- table

BEARING INTERFACES

- Seat tolerances for standard conditions

Compatible products

Component

Cylindrical roller and cage thrust assembly	K 81216 TN
WS shaft washer for cylindrical and needle roller thrust bearings	WS 81216
GS housing washer for cylindrical and needle roller thrust bearings	GS 81216

More Information

Product details

- Designs and variants
- General bearing specifications
- Loads
- Temperature limits
- Permissible speed
- Design considerations
- Designation system

Engineering information

- Principles of rolling bearing selection
- General bearing knowledge
- Bearing selection process
- Bearing failure and how to prevent it

Tools

- SimPro Quick
- SKF Product select
- Bearing Frequency Calculator
- LubeSelect for SKF greases
- Heater selection tool

Terms of use

By accessing and using this website / app owned and published by AB SKF (publ.) (556007-3495 · Gothenburg) (“SKF”), you agree to the following terms and conditions:

Warranty Disclaimer and Limitation of Liability

Although every care has been taken to assure the accuracy of the information on this website / app, SKF provides this information "AS IS" and DISCLAIMS ALL WARRANTIES, EXPRESS OR IMPLIED, INCLUDING, BUT NOT LIMITED TO, IMPLIED WARRANTIES OF MERCHANTABILITY AND FITNESS FOR A PARTICULAR PURPOSE. You acknowledge that your use of this website / app is at your sole risk, that you assume full responsibility for all costs associated with use of this website / app, and that SKF shall not be liable for any direct, incidental, consequential, or indirect damages of any kind arising out of your access to, or use of the information or software made available on this website / app.

Any warranties and representations in this website / app for SKF products or services that you purchase or use will be subject to the agreed upon terms and conditions in the contract for such product or service.

Further, for non-SKF websites / apps that are referenced in our website / app or where a hyperlink appears, SKF makes no warranties concerning the accuracy or reliability of the information in these websites / apps and assumes no responsibility for material created or published by third parties contained therein. In addition, SKF does not warrant that this website / app or these other linked websites / apps are free from viruses or other harmful elements.

Third Party Services

When viewing YouTube content via the SKF website(s) (i.e. using YouTube API Services), you agree to be bound by the YouTube Terms of Service.

Copyright

Copyright in this website / app copyright of the information and software made available on this website / app rest with SKF or its licensors. All rights are reserved. All licensed material will reference the licensor that has granted SKF the right to use the material. The information and software made available on this website / app may not be reproduced, duplicated, copied, transferred, distributed, stored, modified, downloaded or otherwise exploited for any commercial use without the prior written approval of SKF. However, it may be reproduced, stored and downloaded for use by individuals without prior written approval of SKF. Under no circumstances may this information or software be supplied to third parties.

This website /app includes certain images used under license from Shutterstock, Inc.

Trademarks and Patents

All trademarks, brand names, and corporate logos displayed on the website / app are the property of SKF or its licensors, and may not be used in any way without prior written approval by SKF. All licensed trademarks published on this website / app reference the licensor that has granted SKF the right to use the trademark. Access to this website / app does not grant to the user any license under any patents owned by or licensed to SKF.

Changes

SKF reserves the right to make changes or additions to this website / app at any time.