KX5004

Capacitive NAMUR sensor

KX-2015-N/NI/20M/1D/1G

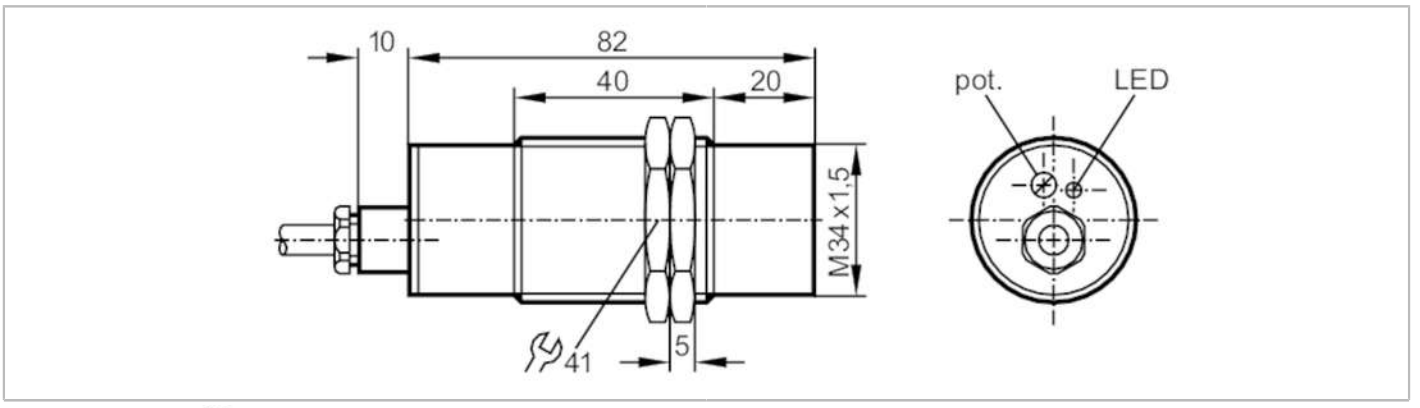

Product characteristics		
Electrical design		NAMUR
Output function		normally closed
Sensing range	[mm]	15
Housing		threaded type
Dimensions	[mm]	M34 x 1.5 / L = 92
Electrical data		
Connection to switching amplifiers		yes
Switching amplifiers		connection to certified intrinsically safe circuits with the max. values: U = 15 V / I = 50 mA / P = 120 mW
Nominal voltage DC	[V]	8.2; (1kΩ)
Supply voltage DC	[V]	7.5...15
Current consumption	[mA]	< 1; (disabled; conductive: > 2,2)
Protection class		I
Measuring principle		capacitive
Outputs		
Electrical design		NAMUR
Output function		normally closed
Switching frequency DC	[Hz]	40
Detection zone		
Sensing range	[mm]	15
Sensing range adjustable		yes
Factory setting sensing range	[mm]	15
Accuracy / deviations		
Correction factor		glass: 0.4 / water: 1 / ceramics: 0.2 / PVC: 0.2
Hysteresis	[% of Sr]	1...15
Switch point drift	[% of Sr]	-15...15
Operating conditions		
Ambient temperature	[°C]	-20...60
Protection		IP 65

KX5004

Capacitive NAMUR sensor

KX-2015-N/NI/20M/1D/1G

Tests / approvals			
Approval		DMT 01 ATEX E 020	
ATEX marking		II 1G Ex ia IIB T6 Ga	
		II 1D Ex ia IIIC T90 °C Da	
EMC		EN 60947-5-2	
MTTF	[years]	838	
Safety classification			
Max. internal capacitance	[nF]	377.88	
Max. internal inductance	[µH]	10	
Mechanical data			
Weight	[g]	1396.5	
Housing		threaded type	
Mounting		non-flush mountable	
Dimensions	[mm]	M34 x 1.5 / L = 92	
Thread designation		M34 x 1.5	
Materials		brass white bronze coated; sensing face: PTFE	
Displays / operating elements			
Display		switching status	1 x LED, yellow
Remarks			
Pack quantity		1 pcs.	
Electrical connection			

Cable: 20 m, PVC; 3 x 0.5 mm²

Connection

