

Image may differ from product. See technical specification for details.

UC 312

Insert bearing with set screw locking and extended inner ring

Insert bearings are based on sealed deep groove ball bearings. This variant is suitable for applications with both constant and alternating directions of rotation. It has an inner ring extended on both sides and is locked onto the shaft by tightening two (set) screws on the inner ring, making it easy to mount.

- Designed for a constant and alternating rotation
- Quick and easy to mount onto the shaft
- Reduce noise and vibration levels

Overview

Dimensions

Shaft diameter	60 mm
Bore diameter	60 mm
Outside diameter	130 mm
Width, total	71 mm
Width, inner ring	71 mm
Width, outer ring	35 mm

Performance

Basic dynamic load rating	81.9 kN
Basic static load rating	52 kN
Limiting speed	2 900 r/min
Note	Limiting speed with shaft tolerance h6

Properties

Retaining feature, inner ring	Set screws
Bore type	Cylindrical
Rolling elements	Balls
Outer ring type	Spherical
Inner ring extension	On both sides
Cage	Sheet metal
Rubber seating ring	Without
Material, bearing	Bearing steel
Coating	Without
Sealing	Seal and flinger on both sides
Sealing type	Contact, standard
Lubricant	Grease
Relubrication feature	With

Logistics

Product net weight	2.6 kg
eClass code	23-05-16-02

UNSPSC code	31171536

Technical specification

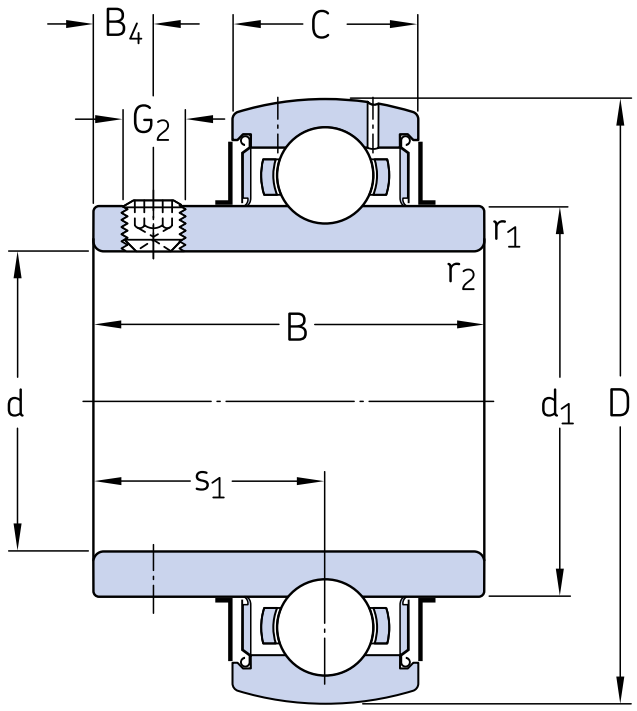

Dimensions

d	60 mm	Bore diameter
D	130 mm	Outside diameter
B	71 mm	Width of inner ring
C	35 mm	Width of outer ring
d_1	≈ 81.7 mm	Outside diameter of inner ring
B_4	12 mm	Distance face to thread centre
$r_{1,2}$	min. 3.5 mm	Chamfer dimension of inner ring
s_1	45 mm	Distance from locking device side face to raceway centre

Calculation data

Basic dynamic load rating	C	81.9 kN
Basic static load rating	C_0	52 kN
Fatigue load limit	P_u	2.2 kN
Limiting speed		2 900 r/min
		Limiting speed with shaft tolerance h6

Calculation factor	f_0	13

Mounting information

Set screw	G_2	M12x1.5
Hexagonal key size for set screw	N	6.08 mm
Recommended tightening torque for set screw		28.5 N·m

Tolerances and clearances

GENERAL BEARING SPECIFICATIONS

- Tolerances: table 1, table 2
- Radial internal clearance: Standard inner ring, Other bearings

BEARING INTERFACES

- Shaft tolerances

Terms of use