Euro series 107mm empty extruded interface support

Product overview

- Suitable for 107mm width PCB's
- Snap fit DIN Rail mounting fixtures
- Available in pre-cut lengths up to 2 metres
- Terminal blocks available in same colour
- Base is moulded in PVC
- End caps and feet are moulded in green UL94-V0 flame retardant PA

CIME/E/E



PART NO.	DESCRIPTION
CIME/E/BE2000E	2m Extruded base element
CIME/E/EC0000E	End cover
CIME/M/SCREWE	Fixing screws for end covers
CIME/E/FE0000E	Foot element
CIM107/xxxx/E*	Complete module

**To specify complete modules use pcb length as xxxx, eg. CIM107/130/E is a module for a 130mm pcb. This assumes the PCB has square corners. If the PCB has a radius in each corner, please contact sales.*

One end and two feet fitted, supplied with one loose end and two screws.

NB. Cutting tolerance is -0 +0.5mm.

Unless otherwise specified, the number of feet supplied are shown below.

Complete modules

- Cut to length base element
- One end and feet supplied pre-assembled
- One end and screws supplied loose

PART NO.	DESCRIPTION
CIM107/xxxx/E	Complete module

LENGTH	NO. OF FEET
16-50mm	1
51-150mm	2
151-300mm	3
301-500mm	4
501-750mm	5
751-999mm	6

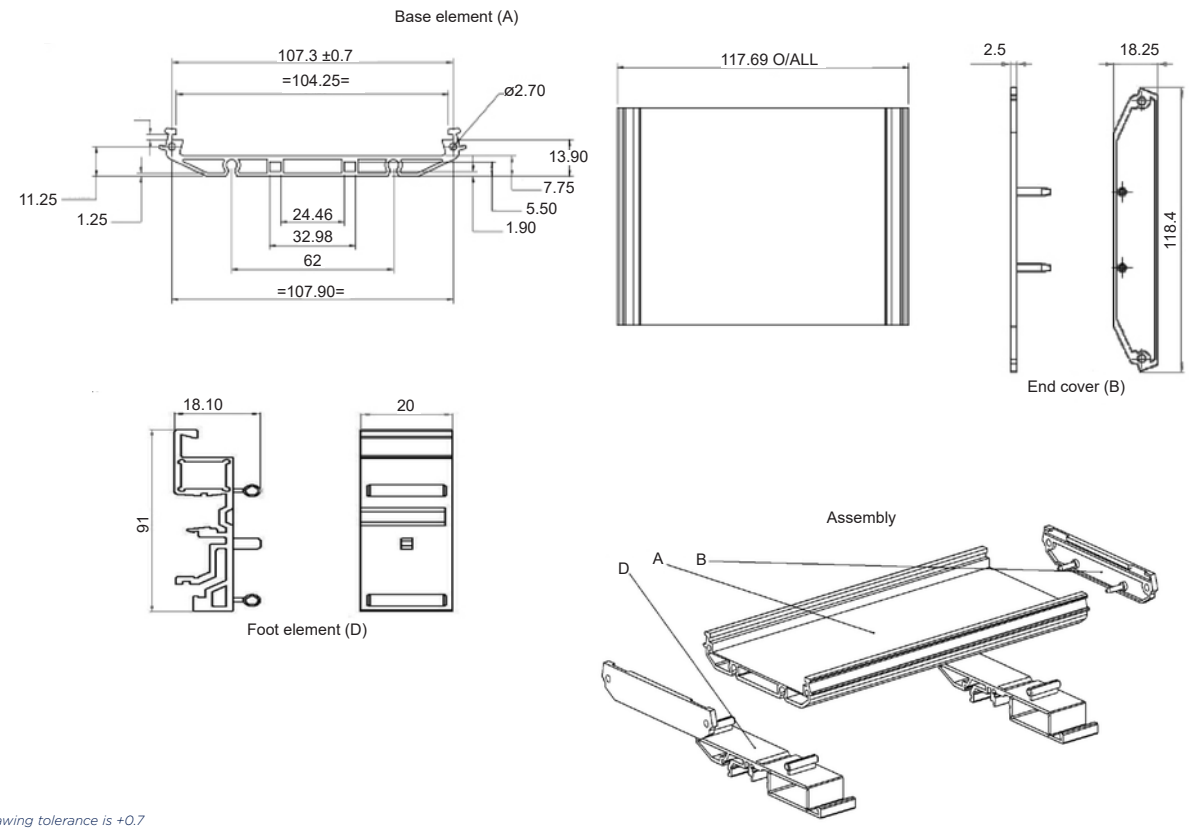

Drawing tolerance is +0.7

+44 (0)1638 716101 | sales@camdenboss.com | www.camdenboss.com

We operate a constant improvement policy, our products are subject to change without notice.

Vers 2

bsi ISO 9001 Quality Management Systems CERTIFIED FM 28614