IY5038

Inductive sensor

IYB30,8-BPKG/V2A/6M

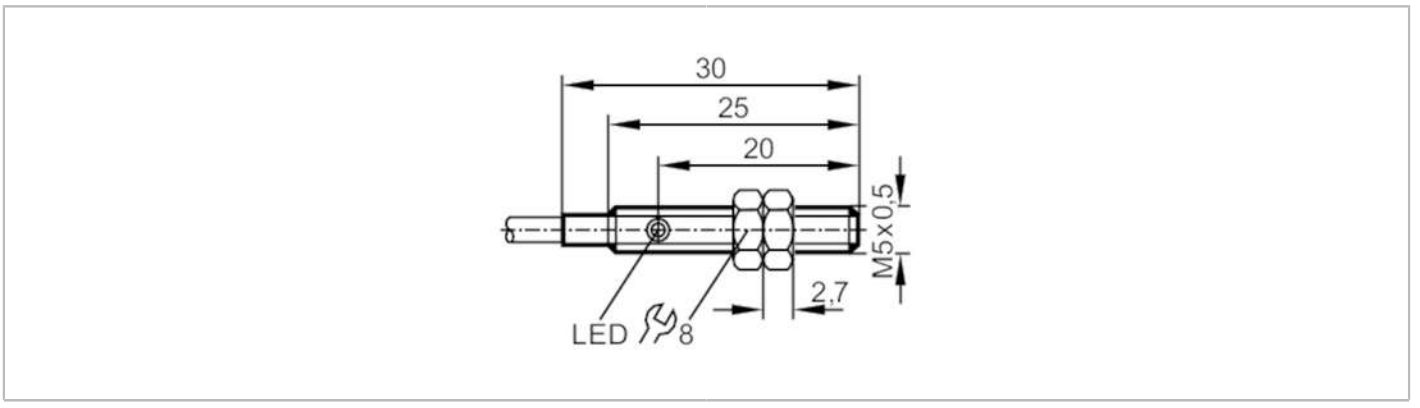

Product characteristics		
Electrical design		PNP
Output function		normally open
Sensing range	[mm]	0.8
Housing		threaded type
Dimensions	[mm]	M5 x 0.5 / L = 30
Electrical data		
Operating voltage	[V]	10...36 DC
Current consumption	[mA]	15; (24 V)
Protection class		III
Reverse polarity protection		yes
Outputs		
Electrical design		PNP
Output function		normally open
Max. voltage drop switching output DC	[V]	2.5
Permanent current rating of switching output DC	[mA]	100
Switching frequency DC	[Hz]	2000
Short-circuit protection		yes
Type of short-circuit protection		pulsed
Overload protection		yes
Detection zone		
Sensing range	[mm]	0.8
Real sensing range Sr	[mm]	0.8 ± 10 %
Operating distance	[mm]	0...0.65
Accuracy / deviations		
Correction factor		steel: 1 / stainless steel: 0.7 / brass: 0.5 / aluminium: 0.4 / copper: 0.3
Hysteresis	[% of Sr]	1...15
Switch point drift	[% of Sr]	-10...10

IY5038

Inductive sensor

IYB30,8-BPKG/V2A/6M

Operating conditions			
Ambient temperature	[°C]	-25...70	
Protection		IP 65	
Tests / approvals			
EMC		EN 61000-4-2 ESD	4 kV CD / 8 kV AD
		EN 61000-4-3 HF radiated	3 V/m
		EN 61000-4-4 Burst	2 kV
		EN 61000-4-6 HF conducted	3 V
		EN 55011	class B
MTTF	[years]	2053	
Mechanical data			
Weight	[g]	129.5	
Housing		threaded type	
Mounting		flush mountable	
Dimensions	[mm]	M5 x 0.5 / L = 30	
Thread designation		M5 x 0.5	
Materials		stainless steel (1.4305 / 303); sensing face: POM	
Tightening torque	[Nm]	2	
Displays / operating elements			
Display		switching status	1 x LED, yellow
Accessories			
Items supplied		lock nuts: 2	
Remarks			
Pack quantity		1 pcs.	
Electrical connection			

Cable: 6 m, PVC; 3 x 0.14 mm²

Connection

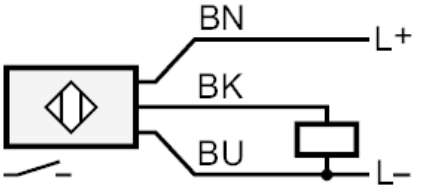

	Core colours :
BN =	brown
BU =	blue
BK =	black